EMERSON
Industrial Automation



User Guide

Unidrive SP

Model sizes 0 to 6

Universal Variable Speed AC drive
for induction and servo motors

Part Number: 0471-0000-13
Issue: 13

CONTROL TECHNIQUES

www.controltechniques.com

General Information

The manufacturer accepts no liability for any consequences resulting from inappropriate, negligent or incorrect installation or adjustment of the optional operating parameters of the equipment or from mismatching the variable speed drive with the motor.

The contents of this guide are believed to be correct at the time of printing. In the interests of a commitment to a policy of continuous development and improvement, the manufacturer reserves the right to change the specification of the product or its performance, or the contents of the guide, without notice.

All rights reserved. No parts of this guide may be reproduced or transmitted in any form or by any means, electrical or mechanical including photocopying, recording or by an information storage or retrieval system, without permission in writing from the publisher.

Drive software version

This product is supplied with the latest software version. If this drive is to be connected to an existing system or machine, all drive software versions should be verified to confirm the same functionality as drives of the same model already present. This may also apply to drives returned from a Control Techniques Service Centre or Repair Centre. If there is any doubt please contact the supplier of the product.

The software version of the drive can be checked by looking at Pr **11.29** and Pr **11.34**. This takes the form of xx.yy.zz where Pr **11.29** displays xx.yy and Pr **11.34** displays zz. (e.g. for software version 01.01.00, Pr **11.29** = 1.01 and Pr **11.34** displays 0).

Environmental statement

Control Techniques is committed to minimising the environmental impacts of its manufacturing operations and of its products throughout their life cycle. To this end, we operate an Environmental Management System (EMS) which is certified to the International Standard ISO 14001. Further information on the EMS, our Environmental Policy and other relevant information is available on request, or can be found at www.greendrives.com.

The electronic variable-speed drives manufactured by Control Techniques have the potential to save energy and (through increased machine/process efficiency) reduce raw material consumption and scrap throughout their long working lifetime. In typical applications, these positive environmental effects far outweigh the negative impacts of product manufacture and end-of-life disposal.

Nevertheless, when the products eventually reach the end of their useful life, they must not be discarded but should instead be recycled by a specialist recycler of electronic equipment. Recyclers will find the products easy to dismantle into their major component parts for efficient recycling. Many parts snap together and can be separated without the use of tools, while other parts are secured with conventional fasteners. Virtually all parts of the product are suitable for recycling.

Product packaging is of good quality and can be re-used. Large products are packed in wooden crates, while smaller products come in strong cardboard cartons which themselves have a high recycled fibre content. If not re-used, these containers can be recycled. Polythene, used on the protective film and bags for wrapping product, can be recycled in the same way. Control Techniques' packaging strategy prefers easily-recyclable materials of low environmental impact, and regular reviews identify opportunities for improvement.

When preparing to recycle or dispose of any product or packaging, please observe local legislation and best practice.

REACH legislation

EC Regulation 1907/2006 on the Registration, Evaluation, Authorisation and restriction of Chemicals (REACH) requires the supplier of an article to inform the recipient if it contains more than a specified proportion of any substance which is considered by the European Chemicals Agency (ECHA) to be a Substance of Very High Concern (SVHC) and is therefore listed by them as a candidate for compulsory authorisation.

For current information on how this requirement applies in relation to specific Control Techniques products, please approach your usual contact in the first instance. Control Techniques position statement can be viewed at:

http://www.controltechniques.com/REACH

Copyright © August 2011 Control Techniques Ltd

Issue Number: 13

Software: 01.20.00 onwards

How to use this guide

This user guide provides complete information for installing and operating the drive from start to finish.

The information is in logical order, taking the reader from receiving the drive through to fine tuning the performance.

NOTE

There are specific safety warnings throughout this guide, located in the relevant sections. In addition, Chapter 1 *Safety Information* contains general safety information. It is essential that the warnings are observed and the information considered when working with or designing a system using the drive.

This map of the user guide helps to find the right sections for the task you wish to complete, but for specific information, refer to *Contents* on page 4:

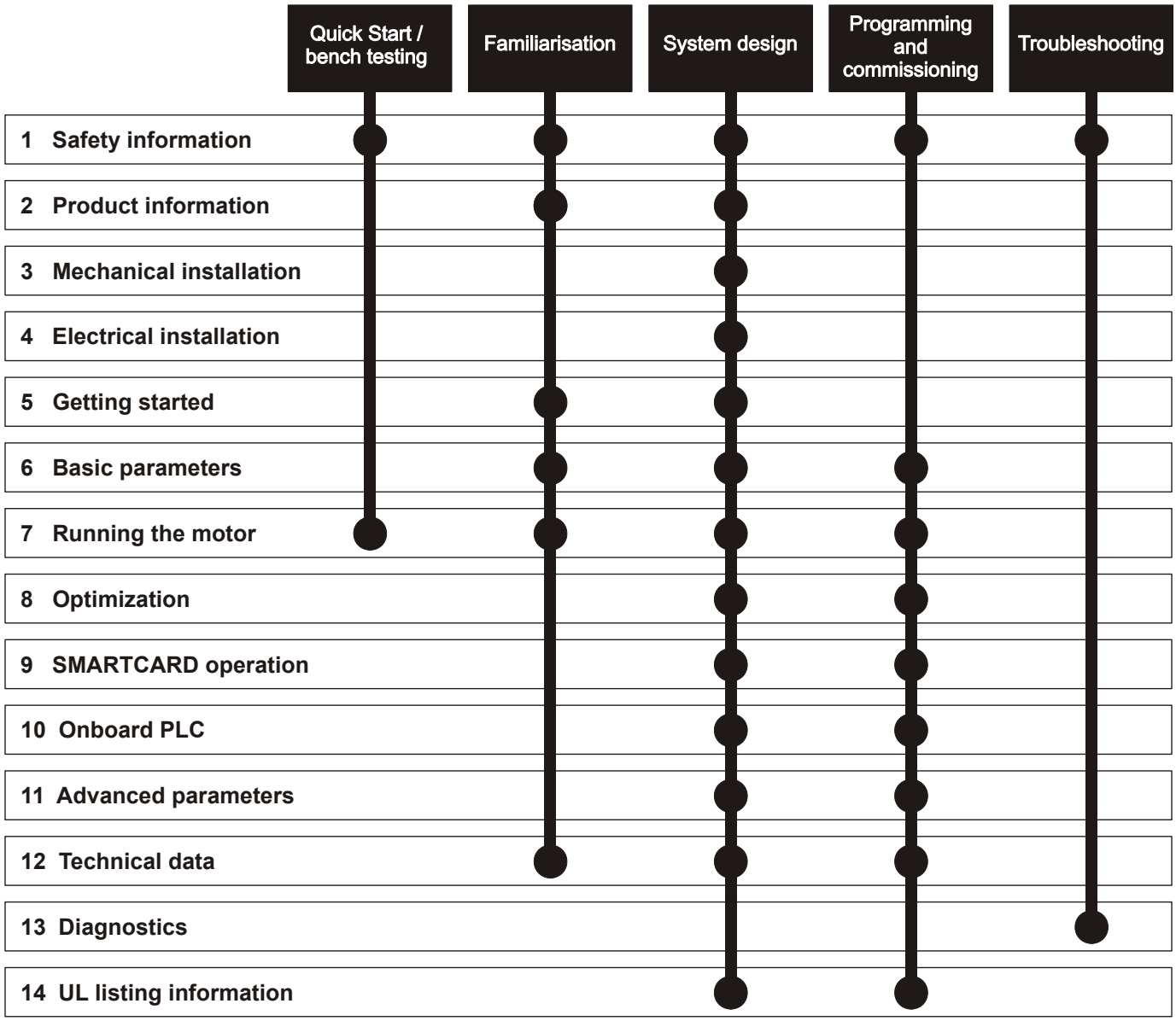

Contents

Declaration of Conformity (Size 0) 6

Declaration of Conformity (Size 1-3) 7

Declaration of Conformity (Size 4-5) 8

Declaration of Conformity (Size 6) 9

Declaration of Conformity (including 2006 Machinery Directive) ... 10

1 Safety Information 11

1.1 Warnings, Cautions and Notes 11
1.2 Electrical safety - general warning 11
1.3 System design and safety of personnel 11
1.4 Environmental limits 11
1.5 Access 11
1.6 Fire protection 11
1.7 Compliance with regulations 11
1.8 Motor 11
1.9 Mechanical brake control 11
1.10 Adjusting parameters 11
1.11 Electrical installation 12

2 Product Information 13

2.1 Ratings 13
2.2 Model number 18
2.3 Operating modes 18
2.4 Compatible encoders 18
2.5 Drive features 19
2.6 Nameplate description 21
2.7 Options 23
2.8 Items supplied with the drive 26

3 Mechanical Installation 28

3.1 Safety information 28
3.2 Planning the installation 28
3.3 Terminal cover removal 29
3.4 Solutions Module / keypad installation / removal 35
3.5 Mounting methods 37
3.6 Enclosure for standard drives 48
3.7 Enclosure design and drive ambient temperature 49
3.8 Heatsink fan operation 50
3.9 Enclosing standard drive for high environmental protection 50
3.10 External EMC filter 54
3.11 Internal / heatsink mounted braking resistor 60
3.12 Electrical terminals 64
3.13 Routine maintenance 66

4 Electrical installation 67

4.1 Power connections 67
4.2 AC supply requirements 71
4.3 Supplying the drive with DC / DC bus paralleling 72
4.4 Heatsink fan supply 72
4.5 Control 24Vdc supply 72
4.6 Low voltage DC power supply 73
4.7 Ratings 73
4.8 Output circuit and motor protection 76
4.9 Braking 78
4.10 Ground leakage 81
4.11 EMC (Electromagnetic compatibility) 81
4.12 Serial communications connections 90
4.13 Control connections 91
4.14 Encoder connections 94
4.15 Low voltage DC mode enable and heatsink fan supply connections (size 4 to 6) 98
4.16 SAFE TORQUE OFF 99

5 Getting Started 100

5.1 Understanding the display 100
5.2 Keypad operation 100
5.3 Menu structure 102
5.4 Menu 0 102
5.5 Advanced menus 103
5.6 Changing the operating mode 104
5.7 Saving parameters 104
5.8 Restoring parameter defaults 104
5.9 Parameter access level and security 105
5.10 Displaying parameters with non-default values only 106
5.11 Displaying destination parameters only 106
5.12 Serial communications 106

6 Basic parameters 107

6.1 Single line descriptions 107
6.2 Full descriptions 112

7 Running the motor 122

7.1 Quick start Connections 122
7.2 Changing the operating mode 122
7.3 Quick Start commissioning/start-up 126
7.4 Quick start commissioning/start-up (CTSoft) ... 132
7.5 Setting up a feedback device 133

8 Optimization 137

8.1 Motor map parameters 137
8.2 Maximum motor rated current 147
8.3 Current limits 147
8.4 Motor thermal protection 147
8.5 Switching frequency 148
8.6 High speed operation 148

9 SMARTCARD operation 150
9.1 Introduction 150
9.2 Transferring data 151
9.3 Data block header information 153
9.4 SMARTCARD parameters 153
9.5 SMARTCARD trips 155

10 Onboard PLC 157
10.1 Onboard PLC and SYPTLite 157
10.2 Benefits 157
10.3 Limitations 157
10.4 Getting started 158
10.5 Onboard PLC parameters 158
10.6 Onboard PLC trips 159
10.7 Onboard PLC and the SMARTCARD 159

11 Advanced parameters 160
11.1 Menu 1: Frequency / speed reference 168
11.2 Menu 2: Ramps 172
11.3 Menu 3: Frequency slaving, speed feedback and speed control 175
11.4 Menu 4: Torque and current control 180
11.5 Menu 5: Motor control 184
11.6 Menu 6: Sequencer and clock 189
11.7 Menu 7: Analog I/O 191
11.8 Menu 8: Digital I/O 194
11.9 Menu 9: Programmable logic, motorized pot, binary sum and timers 197
11.10 Menu 10: Status and trips 200
11.11 Menu 11: General drive set-up 201
11.12 Menu 12: Threshold detectors, variable selectors and brake control function 202
11.13 Menu 13: Position control 208
11.14 Menu 14: User PID controller 214
11.15 Menus 15, 16 and 17: Solutions Module set-up 217
11.16 Menu 18: Application menu 1 253
11.17 Menu 19: Application menu 2 253
11.18 Menu 20: Application menu 3 253
11.19 Menu 21: Second motor parameters 254
11.20 Menu 22: Additional Menu 0 set-up 255
11.21 Advanced features 256

12 Technical Data 265
12.1 Drive technical data 265
12.2 Optional external EMC filters 279

13 Diagnostics 283
13.1 Trip indications 283
13.2 Alarm indications 299
13.3 Status indications 299
13.4 Displaying the trip history 300
13.5 Behaviour of the drive when tripped 300

14 UL Listing Information 301
14.1 Common UL information 301
14.2 Power dependant UL information 301
14.3 AC supply specification 301
14.4 Maximum continuous output current 301
14.5 Safety label 302
14.6 UL listed accessories 302

List of figures 303

List of tables 305

Index 307

Declaration of Conformity (Size 0)

Control Techniques Ltd
The Gro
Newtown
Powys
UK
SY16 3BE

SP0201	SP0202	SP0203	SP0204	SP0205
SP0401	SP0402	SP0403	SP0404	SP0405

The AC variable speed drive products listed above have been designed and manufactured in accordance with the following European harmonised standards:

EN 61800-5-1:2007	Adjustable speed electrical power drive systems - safety requirements - electrical, thermal and energy
EN 61800-3:2004	Adjustable speed electrical power drive systems. EMC product standard including specific test methods
EN 61000-6-2:2005	Electromagnetic compatibility (EMC). Generic standards. Immunity standard for industrial environments
EN 61000-6-4:2007	Electromagnetic compatibility (EMC). Generic standards. Emission standard for industrial environments
EN 61000-3-2:2006	Electromagnetic compatibility (EMC), Limits, Limits for harmonic current emissions (equipment input current <16A per phase)
EN 61000-3-3:2008	Electromagnetic compatibility (EMC), Limits, Limitation of voltage fluctuations and flicker in low-voltage supply systems for equipment with rated current <16A

EN 61000-3-2:2006 Applicable where input current <16A. No limits apply for professional equipment where input power >1kW.

These products comply with the Low Voltage Directive 2006/95/EC and the Electromagnetic Compatibility Directive 2004/108/EC.



T. Alexander
Vice President, Technology
Newtown

Date: 14th July 2009

These electronic drive products are intended to be used with appropriate motors, controllers, electrical protection components and other equipment to form complete end products or systems. Compliance with safety and EMC regulations depends upon installing and configuring drives correctly, including using the specified input filters. The drives must be installed only by professional assemblers who are familiar with requirements for safety and EMC. The assembler is responsible for ensuring that the end product or system complies with all the relevant laws in the country where it is to be used. Refer to the User Guide. An EMC Data Sheet is also available giving detailed EMC information.

Declaration of Conformity (Size 1-3)

Control Techniques Ltd
The Gro
Newtown
Powys
UK
SY16 3BE

SP1201	SP1202	SP1203	SP1204
SP2201	SP2202	SP2203	
SP3201	SP3202		

SP1401	SP1402	SP1403	SP1404	SP1405	SP1406
SP2401	SP2402	SP2403	SP2404		
SP3401	SP3402	SP3403			

SP3501	SP3502	SP3503	SP3504	SP3505	SP3506	SP3507

The AC variable speed drive products listed above have been designed and manufactured in accordance with the following European harmonised standards:

EN 61800-5-1:2007	Electronic equipment for use in power installations
EN 61800-3:2004	Adjustable speed electrical power drive systems. EMC product standard including specific test methods
EN 61000-6-2:2005	Electromagnetic compatibility (EMC). Generic standards. Immunity standard for industrial environments
EN 61000-6-4:2007	Electromagnetic compatibility (EMC). Generic standards. Emission standard for industrial environments
EN 61000-3-2:2006[1]	Electromagnetic compatibility (EMC), Limits, Limits for harmonic current emissions (equipment input current <16A per phase)
EN 61000-3-3:2008	Electromagnetic compatibility (EMC), Limits, Limitation of voltage fluctuations and flicker in low-voltage supply systems for equipment with rated current <16A

[1] These products are for professional use, and power input exceeds 1kW for all models, so no limits apply.

These products comply with the Low Voltage Directive 2006/95/EC and the Electromagnetic Compatibility Directive 2004/108/EC.



T. Alexander
Vice President, Technology
Newtown

Date: 14th July 2009

These electronic drive products are intended to be used with appropriate motors, controllers, electrical protection components and other equipment to form complete end products or systems. Compliance with safety and EMC regulations depends upon installing and configuring drives correctly, including using the specified input filters. The drives must be installed only by professional assemblers who are familiar with requirements for safety and EMC. The assembler is responsible for ensuring that the end product or system complies with all the relevant laws in the country where it is to be used. Refer to the User Guide. An EMC Data Sheet is also available giving detailed EMC information.

Declaration of Conformity (Size 4-5)

Control Techniques Ltd
The Gro
Newtown
Powys
UK
SY16 3BE

SP4201	SP4202	SP4203	SP5201	SP5202	
SP4401	SP4402	SP4403	SP5401	SP5402	
SP4601	SP4602	SP4603	SP4604	SP4605	SP4606
SP5601	SP5602				

The AC variable speed drive products listed above have been designed and manufactured in accordance with the following European harmonised standards:

EN 61800-5-1:2007	Adjustable speed electrical power drive systems - safety requirements - electrical, thermal and energy
EN 61800-3:2004	Adjustable speed electrical power drive systems. EMC product standard including specific test methods
EN 61000-6-2:2005	Electromagnetic compatibility (EMC). Generic standards. Immunity standard for industrial environments
EN 61000-6-4:2007	Electromagnetic compatibility (EMC). Generic standards. Emission standard for industrial environments

These products comply with the Low Voltage Directive 2006/95/EC and the Electromagnetic Compatibility Directive 2004/108/EC.



T. Alexander
Vice President, Technology
Newtown

Date: 14th July 2009

These electronic drive products are intended to be used with appropriate motors, controllers, electrical protection components and other equipment to form complete end products or systems. Compliance with safety and EMC regulations depends upon installing and configuring drives correctly, including using the specified input filters. The drives must be installed only by professional assemblers who are familiar with requirements for safety and EMC. The assembler is responsible for ensuring that the end product or system complies with all the relevant laws in the country where it is to be used. Refer to the User Guide. An EMC Data Sheet is also available giving detailed EMC information.

Declaration of Conformity (Size 6)

Control Techniques Ltd
The Gro
Newtown
Powys
UK
SY16 3BE

SP6401	SP6402
SP6601	SP6602

The AC variable speed drive products listed above have been designed and manufactured in accordance with the following European harmonised standards:

EN 61800-5-1:2007	Adjustable speed electrical power drive systems - safety requirements - electrical, thermal and energy
EN 61800-3:2004	Adjustable speed electrical power drive systems. EMC product standard including specific test methods
EN 61000-6-2:2005	Electromagnetic compatibility (EMC). Generic standards. Immunity standard for industrial environments

These products comply with the Low Voltage Directive 2006/95/EC and the Electromagnetic Compatibility Directive 2004/108/EC.



T. Alexander
Vice President, Technology
Newtown

Date: 14th July 2009

These electronic drive products are intended to be used with appropriate motors, controllers, electrical protection components and other equipment to form complete end products or systems. Compliance with safety and EMC regulations depends upon installing and configuring drives correctly, including using the specified input filters. The drives must be installed only by professional assemblers who are familiar with requirements for safety and EMC. The assembler is responsible for ensuring that the end product or system complies with all the relevant laws in the country where it is to be used. Refer to the User Guide. An EMC Data Sheet is also available giving detailed EMC information.

Declaration of Conformity (including 2006 Machinery Directive)

Control Techniques Ltd
The Gro
Newtown
Powys
UK
SY16 3BE

This declaration applies to the Unidrive SP and Digitax ST variable speed drive product ranges, comprising model numbers composed as shown below.:

SP*(ab)cdef* Valid characters:		**DST*abcde*** Valid characters:	
ab	Absent or MD	*a*	1
c	0 1 2 3 4 5 6 7 8 9	*b*	2 4
d	2 4 5 6	*c*	0
e	0 1 2 3	*d*	1 2 3 4 5
f	1 2 3 4 5 6 7	*e*	B I P Z

This declaration relates to these products when used as a safety component of a machine. Only the SAFE TORQUE OFF function may be used for a safety function of a machine. None of the other functions of the drive may be used to carry out a safety function.

These products fulfil all the relevant provisions of Directive 2006/42/EC (The Machinery Directive). They also fulfil all the relevant provisions of Directives 2004/108/EC (The EMC Directive) and 2006/95/EC (The Low Voltage Directive).

EC type-examination has been carried out by the following notified body:

IFA

Alte Heerstraße 111

53757 Sankt Augustin

Germany.

Notified Body identification number: 0121

EC type-examination certificate number: IFA 1001123

The schedule attached to the certificate specifies the product model numbers which have been subjected to type examination.

The harmonised standards used are shown below:

DIN EN 61800-5-1:2008	Adjustable speed electrical power drive systems. Safety requirements. Electrical, thermal and energy
DIN EN 61800-5-2:2008	Adjustable speed electrical power drive systems. Safety requirements. Functional
DIN EN ISO 13849-1:2008	Safety of machinery. Safety-related parts of control systems. General principles for design
DIN EN ISO 13849-2:2008	Safety of machinery. Safety-related parts of control systems. Validation

Person authorised to compile the technical file:

C Hargis

Chief Engineer

Address as above



T. Alexander
VP Technology
Date: 1st June 2011
Place: Newtown, Powys. UK

IMPORTANT NOTICE

These drive products are intended to be used with appropriate motors, sensors, electrical protection components and other equipment to form complete systems. It is the responsibility of the installer to ensure that the design of the complete machine, including its safety-related control system, is carried out in accordance with the requirements of the Machinery Directive and any other relevant legislation. The use of a safety-related drive in itself does not ensure the safety of the machine.

Compliance with safety and EMC regulations depends upon installing and configuring inverters correctly. The inverters must be installed only by professional assemblers who are familiar with requirements for safety and EMC. The assembler is responsible for ensuring that the end product or system complies with all the relevant laws in the country where it is to be used. Refer to the Installation Guide.

1 Safety Information

1.1 Warnings, Cautions and Notes



A Warning contains information which is essential for avoiding a safety hazard.

WARNING



A Caution contains information which is necessary for avoiding a risk of damage to the product or other equipment.

CAUTION

NOTE

A Note contains information which helps to ensure correct operation of the product.

1.2 Electrical safety - general warning

The voltages used in the drive can cause severe electrical shock and/or burns, and could be lethal. Extreme care is necessary at all times when working with or adjacent to the drive.

Specific warnings are given at the relevant places in this User Guide.

1.3 System design and safety of personnel

The drive is intended as a component for professional incorporation into complete equipment or a system. If installed incorrectly, the drive may present a safety hazard.

The drive uses high voltages and currents, carries a high level of stored electrical energy, and is used to control equipment which can cause injury.

Close attention is required to the electrical installation and the system design to avoid hazards either in normal operation or in the event of equipment malfunction. System design, installation, commissioning/ start-up and maintenance must be carried out by personnel who have the necessary training and experience. They must read this safety information and this User Guide carefully.

The STOP and SAFE TORQUE OFF functions of the drive do not isolate dangerous voltages from the output of the drive or from any external option unit. The supply must be disconnected by an approved electrical isolation device before gaining access to the electrical connections.

With the sole exception of the SAFE TORQUE OFF function, none of the drive functions must be used to ensure safety of personnel, i.e. they must not be used for safety-related functions.

Careful consideration must be given to the functions of the drive which might result in a hazard, either through their intended behavior or through incorrect operation due to a fault. In any application where a malfunction of the drive or its control system could lead to or allow damage, loss or injury, a risk analysis must be carried out, and where necessary, further measures taken to reduce the risk - for example, an over-speed protection device in case of failure of the speed control, or a fail-safe mechanical brake in case of loss of motor braking.

The SAFE TORQUE OFF function has been approved by BGIA as meeting the requirements of the following standards, for the prevention of unexpected starting of the drive:

EN 61800-5-2:2007 SIL 3

EN ISO 13849-1:2006 PL e

EN 954-1:1997 Category 3

The SAFE TORQUE OFF function may be used in a safety-related application. The system designer is responsible for ensuring that the complete system is safe and designed correctly according to the relevant safety standards.

1.4 Environmental limits

Instructions in this User Guide regarding transport, storage, installation and use of the drive must be complied with, including the specified environmental limits. Drives must not be subjected to excessive physical force.

1.5 Access

Drive access must be restricted to authorized personnel only. Safety regulations which apply at the place of use must be complied with.

1.6 Fire protection

The drive enclosure is not classified as a fire enclosure. A separate fire enclosure must be provided. For further information, refer to section 3.2.5 *Fire protection* on page 28.

1.7 Compliance with regulations

The installer is responsible for complying with all relevant regulations, such as national wiring regulations, accident prevention regulations and electromagnetic compatibility (EMC) regulations. Particular attention must be given to the cross-sectional areas of conductors, the selection of fuses or other protection, and protective ground (earth) connections.

This User Guide contains instruction for achieving compliance with specific EMC standards.

Within the European Union, all machinery in which this product is used must comply with the following directives:

2006/42/EC Safety of machinery.
2004/108/EC: Electromagnetic Compatibility.

1.8 Motor

Ensure the motor is installed in accordance with the manufacturer's recommendations. Ensure the motor shaft is not exposed.

Standard squirrel cage induction motors are designed for single speed operation. If it is intended to use the capability of the drive to run a motor at speeds above its designed maximum, it is strongly recommended that the manufacturer is consulted first.

Low speeds may cause the motor to overheat because the cooling fan becomes less effective. The motor should be installed with a protection thermistor. If necessary, an electric forced vent fan should be used.

The values of the motor parameters set in the drive affect the protection of the motor. The default values in the drive should not be relied upon.

It is essential that the correct value is entered in parameter **0.46** motor rated current. This affects the thermal protection of the motor.

1.9 Mechanical brake control

The brake control functions are provided to allow well co-ordinated operation of an external brake with the drive. While both hardware and software are designed to high standards of quality and robustness, they are not intended for use as safety functions, i.e. where a fault or failure would result in a risk of injury. In any application where the incorrect operation of the brake release mechanism could result in injury, independent protection devices of proven integrity must also be incorporated.

1.10 Adjusting parameters

Some parameters have a profound effect on the operation of the drive. They must not be altered without careful consideration of the impact on the controlled system. Measures must be taken to prevent unwanted changes due to error or tampering.

1.11 Electrical installation

1.11.1 Electric shock risk

The voltages present in the following locations can cause severe electric shock and may be lethal:

AC supply cables and connections

Output cables and connections

Many internal parts of the drive, and external option units

Unless otherwise indicated, control terminals are single insulated and must not be touched.

1.11.2 Stored charge

The drive contains capacitors that remain charged to a potentially lethal voltage after the AC supply has been disconnected. If the drive has been energized, the AC supply must be isolated at least ten minutes before work may continue.

2 Product Information

2.1 Ratings

The Unidrive SP is dual rated.
The setting of the motor rated current determines which rating applies - Heavy Duty or Normal Duty.
The two ratings are compatible with motors designed to IEC60034.
The graph aside illustrates the difference between Normal Duty and Heavy Duty with respect to continuous current rating and short term overload limits.

NOTE

Only size 0 is Heavy Duty rated

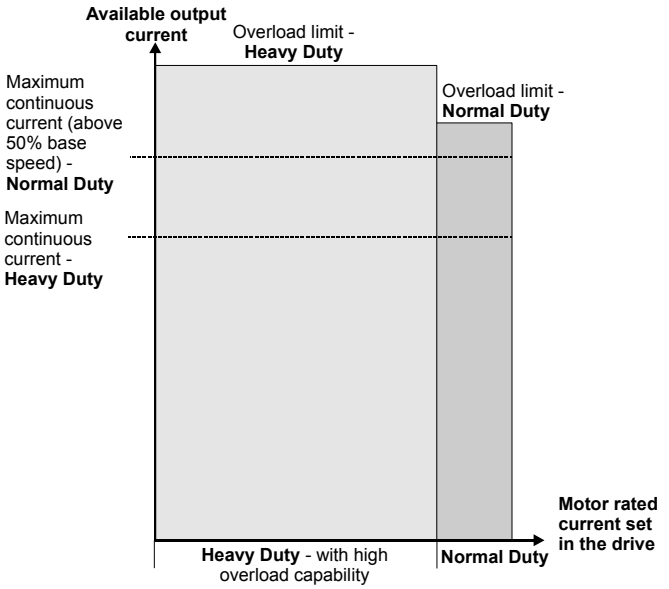

Normal Duty

For applications which use Self ventilated (TENV/TEFC) induction motors and require a low overload capability, and full torque at low speeds is not required (e.g. fans, pumps).
Self ventilated (TENV/TEFC) induction motors require increased protection against overload due to the reduced cooling effect of the fan at low speed. To provide the correct level of protection the I^2t software operates at a level which is speed dependent. This is illustrated in the graph below.

NOTE

The speed at which the low speed protection takes effect can be changed by the setting of Pr **4.25**. The protection starts when the motor speed is below 15% of base speed when Pr **4.25** = 0 (default) and below 50% when Pr **4.25** = 1.

Heavy Duty (default)

For constant torque applications or applications which require a high overload capability, or full torque is required at low speeds (e.g. winders, hoists).
The thermal protection is set to protect force ventilated induction motors and permanent magnet servo motors by default.

NOTE

If the application uses a self ventilated (TENV/TEFC) induction motor and increased thermal protection is required for speeds below 50% base speed, then this can be enabled by setting Pr **4.25** = 1.

Operation of motor I^2t protection (It.AC trip)

Motor I^2t protection is fixed as shown below and is compatible with:
- Self ventilated (TENV/TEFC) induction motors

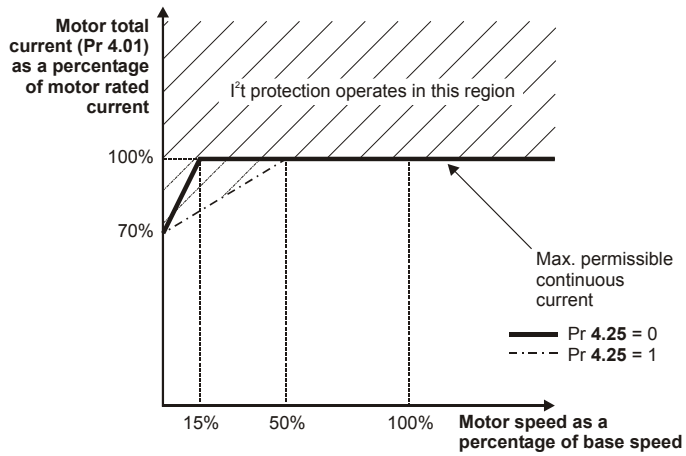

Motor I^2t protection defaults to be compatible with:
- Forced ventilation induction motors
- Permanent magnet servo motors

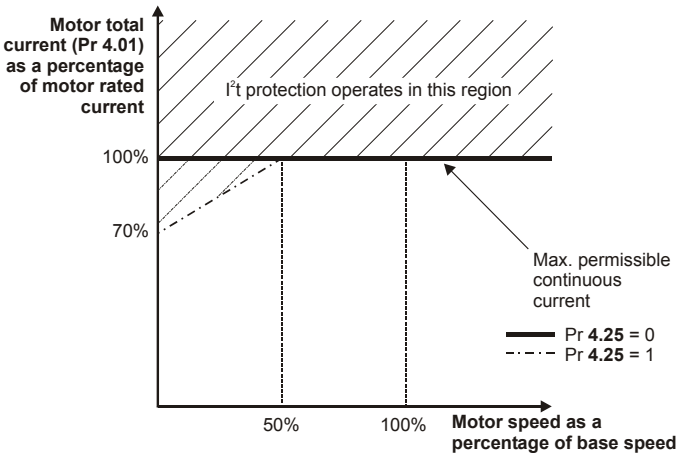

The continuous current ratings given are for maximum 40°C (104°F), 1000m altitude and 3.0 kHz switching. Derating is required for higher switching frequencies, ambient temperature >40°C (104°F) and high altitude. For further information, refer to section 12.1.1 *Power and current ratings (Derating for switching frequency and temperature)* on page 265.

Table 2-1 200V drive ratings (200V to 240V ±10%)

Model		Normal Duty				Heavy Duty				
		Maximum continuous output current	Nominal power at 220V	Motor power at 230V	Peak current	Maximum continuous output current	Open loop peak current	Closed loop peak current	Nominal power at 220V	Motor power at 230V
		A	kW	hp	A	A	A	A	kW	hp
	0201					2.2	3.3	3.8 (3.3)*	0.37	0.5
	0202					3.1	4.6	5.4 (4.6)*	0.55	0.75
	0203					4.0	6.0	7.0 (6.0)*	0.75	1.0
	0204					5.7	8.5	9.9 (8.5)*	1.1	1.5
	0205					7.5	11.2	13.1 (11.2)*	1.5	2.0
	1201	5.2	1.1	1.5	5.7	4.3	6.4	7.5	0.75	1.0
	1202	6.8	1.5	2.0	7.4	5.8	8.7	10.1	1.1	1.5
	1203	9.6	2.2	3.0	10.5	7.5	11.2	13.1	1.5	2.0
	1204	11	3.0	3.0	12.1	10.6	15.9	18.5	2.2	3.0
	2201	15.5	4.0	5.0	17.0	12.6	18.9	22	3.0	3.0
	2202	22	5.5	7.5	24.2	17	25.5	29.7	4.0	5.0
	2203	28	7.5	10	30.8	25	37.5	43.7	5.5	7.5
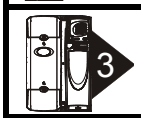	3201	42	11	15	46	31	46.5	54.2	7.5	10
	3202	54	15	20	59	42	63	73.5	11	15
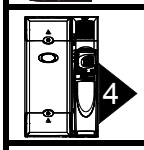	4201	68	18.5	25	74	56	84	98	15	20
	4202	80	22	30	88	68	102	119	18.5	25
	4203	104	30	40	114	80	120	140	22	30
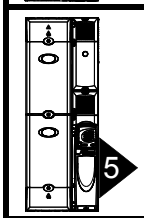	5201	130	37	50	143	105	157	183	30	40
	5202	154	45	60	169	130	195	227	37	50

*The closed loop peak current is based on 175% of the maximum continuous output current when the drive is used on a 3 phase supply. The value in brackets is the peak current based on 150% of the maximum continuous output current when the drive is used on a 1 phase supply.

Table 2-2 400V drive ratings (380V to 480V ±10%)

Model		Normal Duty				Heavy Duty				
		Maximum continuous output current	Nominal power at 400V	Motor power at 460V	Peak current	Maximum continuous output current	Open loop peak current	Closed loop peak current	Nominal power at 400V	Motor power at 460V
		A	kW	hp	A	A	A	A	kW	hp
	0401					1.3	1.9	2.2	0.37	0.5
	0402					1.7	2.5	2.9	0.55	0.75
	0403					2.1	3.1	3.6	0.75	1.0
	0404					3.0	4.5	5.2	1.1	1.5
	0405					4.2	6.3	7.3	1.5	2.0
	1401	2.8	1.1	1.5	3.0	2.1	3.1	3.6	0.75	1.0
	1402	3.8	1.5	2.0	4.1	3.0	4.5	5.2	1.1	1.5
	1403	5.0	2.2	3.0	5.5	4.2	6.3	7.3	1.5	2.0
	1404	6.9	3.0	5.0	7.5	5.8	8.7	10.1	2.2	3.0
	1405	8.8	4.0	5.0	9.6	7.6	11.4	13.3	3.0	5.0
	1406	11	5.5	7.5	12.1	9.5	14.2	16.6	4.0	5.0
	2401	15.3	7.5	10	16.8	13	19.5	22.7	5.5	10
	2402	21	11	15	23	16.5	24.7	28.8	7.5	10
	2403	29	15	20	31	25	34.5	40.2	11	20
	2404					29	43.5	50.7	15	20
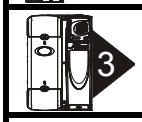	3401	35	18.5	25	38	32	48	56	15	25
	3402	43	22	30	47	40	60	70	18.5	30
	3403	56	30	40	61	46	69	80.5	22	30
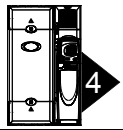	4401	68	37	50	74	60	90	105	30	50
	4402	83	45	60	91	74	111	129.5	37	60
	4403	104	55	75	114	96	144	168	45	75
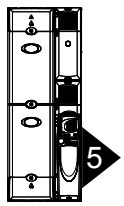	5401	138	75	100	151	124	186	217	55	100
	5402*	168	90	125	184	156	234	273	75	125
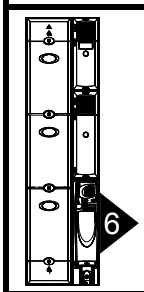	6401*	205	110	150	225	180	231	269	90	150
	6402*	236	132	200	259	210	270	315	110	150

* Derating is applied to these drives at low output frequencies. Please contact the supplier of the drive for more information if the application requires significant torque, at or close to zero speed for extended periods of time or if prolonged periods of overload (>100%) are required.

Table 2-3 575V drive ratings (500V to 575V ±10%)

Model		Normal Duty				Heavy Duty				
		Maximum continuous output current	Nominal power at 575V	Motor power at 575V	Peak current	Maximum continuous output current	Open loop peak current	Closed loop peak current	Nominal power at 575V	Motor power at 575V
		A	kW	hp	A	A	A	A	kW	hp
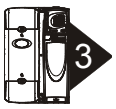	3501	5.4	3.0	3.0	5.9	4.1	6.1	7.1	2.2	2.0
	3502	6.1	4.0	5.0	6.7	5.4	8.1	9.4	3.0	3.0
	3503	8.4	5.5	7.5	9.2	6.1	9.1	10.6	4.0	5.0
	3504	11	7.5	10	12.1	9.5	14.2	16.6	5.5	7.5
	3505	16	11	15	17.6	12	18	21	7.5	10
	3506	22	15	20	24.2	18	27	31.5	11	15
	3507	27	18.5	25	29.7	22	33	38.5	15	20
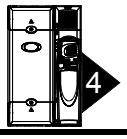	4603	36	22	30	39.6	27	40.5	47.2	18.5	25
	4604	43	30	40	47.3	36	54	63	22	30
	4605	52	37	50	57.2	43	64.5	75.2	30	40
	4606	62	45	60	68	52	78	91	37	50
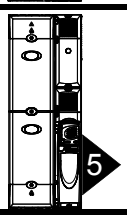	5601*	84	55	75	92	63	93	108.5	45	60
	5602*	99	75	100	108	85	126	147	55	75
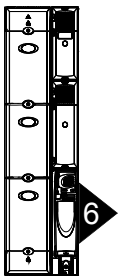	6601*	125	90	125	137	100	128	149	75	100
	6602*	144	110	150	158	125	160	187	90	125

* Derating is applied to these drives at low output frequencies. Please contact the supplier of the drive for more information if the application requires significant torque, at or close to zero speed for extended periods of time or if prolonged periods of overload (>100%) are required.

The power ratings above for model size 4 and larger are for the 690V drives when used on a 500V to 575V supply.

Table 2-4 690V drive ratings (500V to 690V ±10%)

Model		Normal Duty				Heavy Duty				
		Maximum continuous output current	Nominal power at 690V	Motor power at 690V	Peak current	Maximum continuous output current	Open loop peak current	Closed loop peak current	Nominal power at 690V	Motor power at 690V
		A	kW	hp	A	A	A	A	kW	hp
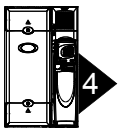	4601	22	18.5	25	24.2	19	27	31.5	15	20
	4602	27	22	30	29.7	22	33	38.5	18.5	25
	4603	36	30	40	39.6	27	40.5	47.2	22	30
	4604	43	37	50	47.3	36	54	63	30	40
	4605	52	45	60	57.2	43	64.5	75.2	37	50
	4606	62	55	75	68.2	52	78	91	45	60
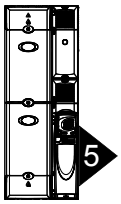	5601*	84	75	100	92	63	93	108.5	55	75
	5602*	99	90	125	108	85	126	147	75	100
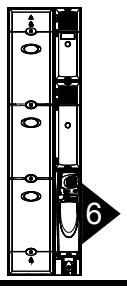	6601*	125	110	150	137	100	128	149	90	125
	6602*	144	132	175	158	125	160	187	110	150

* Derating is applied to these drives at low output frequencies. Please contact the supplier of the drive for more information if the application requires significant torque, at or close to zero speed for extended periods of time or if prolonged periods of overload (>100%) are required.

2.1.1 Typical short term overload limits

The maximum percentage overload limit changes depending on the selected motor. Variations in motor rated current, motor power factor and motor leakage inductance all result in changes in the maximum possible overload. The exact value for a specific motor can be calculated using the equations detailed in Menu 4 in the *Advanced User Guide*.

Typical values are shown in the table below for closed loop vector (VT) and open loop (OL) modes:

Table 2-5 Typical overload limits for size 0 to 5

Operating mode	Closed loop from cold	Closed loop from 100%	Open loop from cold	Open loop from 100%
Normal Duty overload with motor rated current = drive rated current	110% for 165s	110% for 9s	110% for 165s	110% for 9s
Heavy Duty overload with motor rated current = drive rated current	175% for 40s	175% for 5s	150% for 60s	150% for 8s
Heavy Duty overload with a typical 4 pole motor	200% for 28s	200% for 3s	175% for 40s	175% for 5s

Table 2-6 Typical overload limits for size 6

Operating mode	Closed loop from cold	Closed loop from 100%	Open loop from cold	Open loop from 100%
Normal Duty overload with motor rated current = drive rated current	110% for 165s	110% for 9s	110% for 165s	110% for 9s
Heavy Duty overload with motor rated current = drive rated current	150% for 60s	150% for 8s	129% for 97s	129% for 15s

Generally the drive rated current is higher than the matching motor rated current allowing a higher level of overload than the default setting as illustrated by the example of a typical 4 pole motor.

The time allowed in the overload region is proportionally reduced at very low output frequency on some drive ratings.

NOTE

The maximum overload level which can be attained is independent of the speed.

2.2 Model number

The way in which the model numbers for the Unidrive SP range are formed is illustrated below.

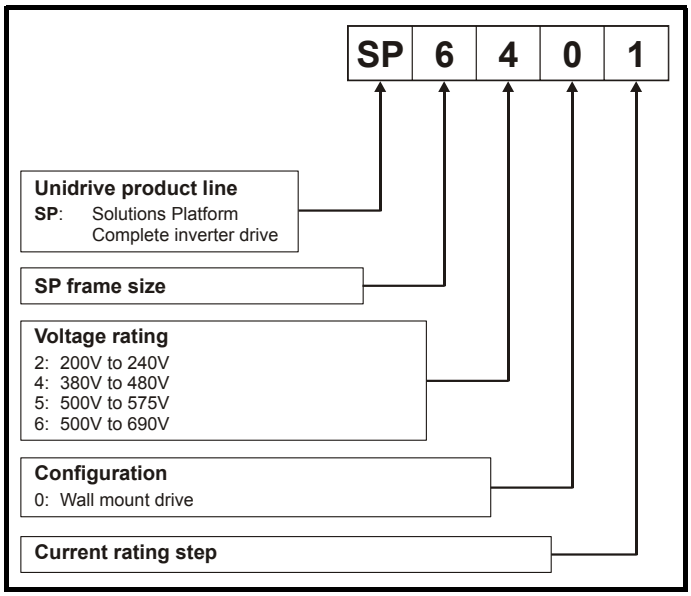

2.3 Operating modes

The Unidrive SP is designed to operate in any of the following modes:

1. Open loop mode
   - Open loop vector mode
   - Fixed V/F mode (V/Hz)
   - Quadratic V/F mode (V/Hz)
2. RFC mode
3. Closed loop vector
4. Servo
5. Regen

2.3.1 Open loop mode

The drive applies power to the motor at frequencies varied by the user. The motor speed is a result of the output frequency of the drive and slip due to the mechanical load. The drive can improve the speed control of the motor by applying slip compensation. The performance at low speed depends on whether V/F mode or open loop vector mode is selected.

For further details refer to section 8.1.1 *Open loop motor control* on page 137.

Open loop vector mode

The voltage applied to the motor is directly proportional to the frequency except at low speed where the drive uses motor parameters to apply the correct voltage to keep the flux constant under varying load conditions.

Typically 100% torque is available down to 1Hz for a 50Hz motor.

Fixed V/F mode

The voltage applied to the motor is directly proportional to the frequency except at low speed where a voltage boost is provided which is set by the user. This mode can be used for multi-motor applications.

Typically 100% torque is available down to 4Hz for a 50Hz motor.

Quadratic V/F mode

The voltage applied to the motor is directly proportional to the square of the frequency except at low speed where a voltage boost is provided which is set by the user. This mode can be used for running fan or pump applications with quadratic load characteristics or for multi-motor applications. This mode is not suitable for applications requiring a high starting torque.

2.3.2 RFC mode

Rotor flux control provides closed loop control without the need for position feedback by using current, voltages and key motor parameters to estimate the motor speed.

It can eliminate instability traditionally associated with open loop control such as operating large motors with light loads at low frequencies.

For further details, refer to section 8.1.2 *RFC mode* on page 139.

2.3.3 Closed loop vector mode

For use with induction motors with a feedback device installed.

The drive directly controls the speed of the motor using the feedback device to ensure the rotor speed is exactly as demanded. Motor flux is accurately controlled at all times to provide full torque all the way down to zero speed.

2.3.4 Servo

For use with permanent magnet brushless motors with a feedback device installed.

The drive directly controls the speed of the motor using the feedback device to ensure the rotor speed is exactly as demanded. Flux control is not required because the motor is self excited by the permanent magnets which form part of the rotor.

Absolute position information is required from the feedback device to ensure the output voltage is accurately matched to the back EMF of the motor. Full torque is available all the way down to zero speed.

2.3.5 Regen

For use as a regenerative front end for four quadrant operation.

Regen operation allows bi-directional power flow to and from the AC supply. This provides far greater efficiency levels in applications which would otherwise dissipate large amounts of energy in the form of heat in a braking resistor.

The harmonic content of the input current is negligible due to the sinusoidal nature of the waveform when compared to a conventional bridge rectifier or SCR/thyristor front end.

See the *Unidrive SP Regen Installation Guide* for more information about operation in this mode.

2.4 Compatible encoders

Table 2-7 Encoders compatible with Unidrive SP

Encoder type	Pr 3.38 setting
Quadrature incremental encoders with or without marker pulse	Ab (0)
Quadrature incremental encoders with UVW commutation signals for absolute position for permanent magnet motors with or without marker pulse	Ab.SErvo (3)
Forward / reverse incremental encoders with or without marker pulse	Fr (2)
Forward / reverse incremental encoders with UVW commutation signals for absolute position for permanent magnet motors with or without marker pulse	Fr.SErvo (5)
Frequency and direction incremental encoders with or without marker pulse	Fd (1)
Frequency and direction incremental encoders with UVW commutation signals for absolute position for permanent magnet motors with or without marker pulse	Fd.SErvo (4)
Sincos incremental encoders	SC (6)
Heidenhain sincos encoders with Endat comms for absolute position	SC.EndAt (9)
Stegmann sincos encoders with Hiperface comms for absolute position	SC.HiPEr (7)
Sincos encoders with SSI comms for absolute position	SC.SSI (11)
SSI encoders (Gray code or binary)	SSI (10)
Endat comms only encoders	EndAt (8)
UVW commutation only encoders*	Ab.SErvo (3)

* This feedback device provides very low resolution feedback and should not be used for applications requiring a high level of performance

2.5 Drive features

Figure 2-1 Features of the size 0 drive

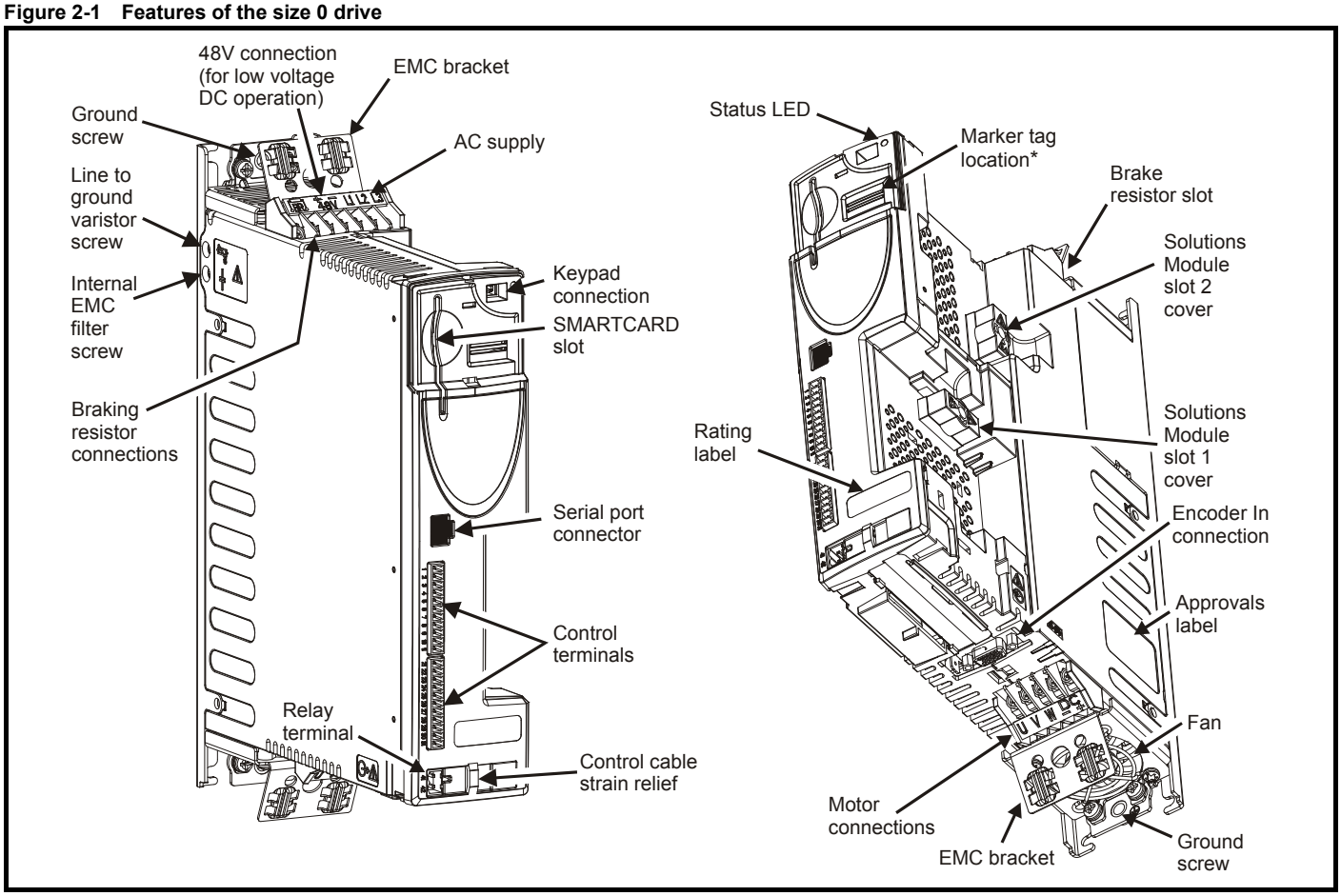

* The Marker tag as shown above, is where markers can be placed to identify a particular drive which can prove to be beneficial where several drives are located in the same panel.

Figure 2-2 Features of the size 1 to 6 drive

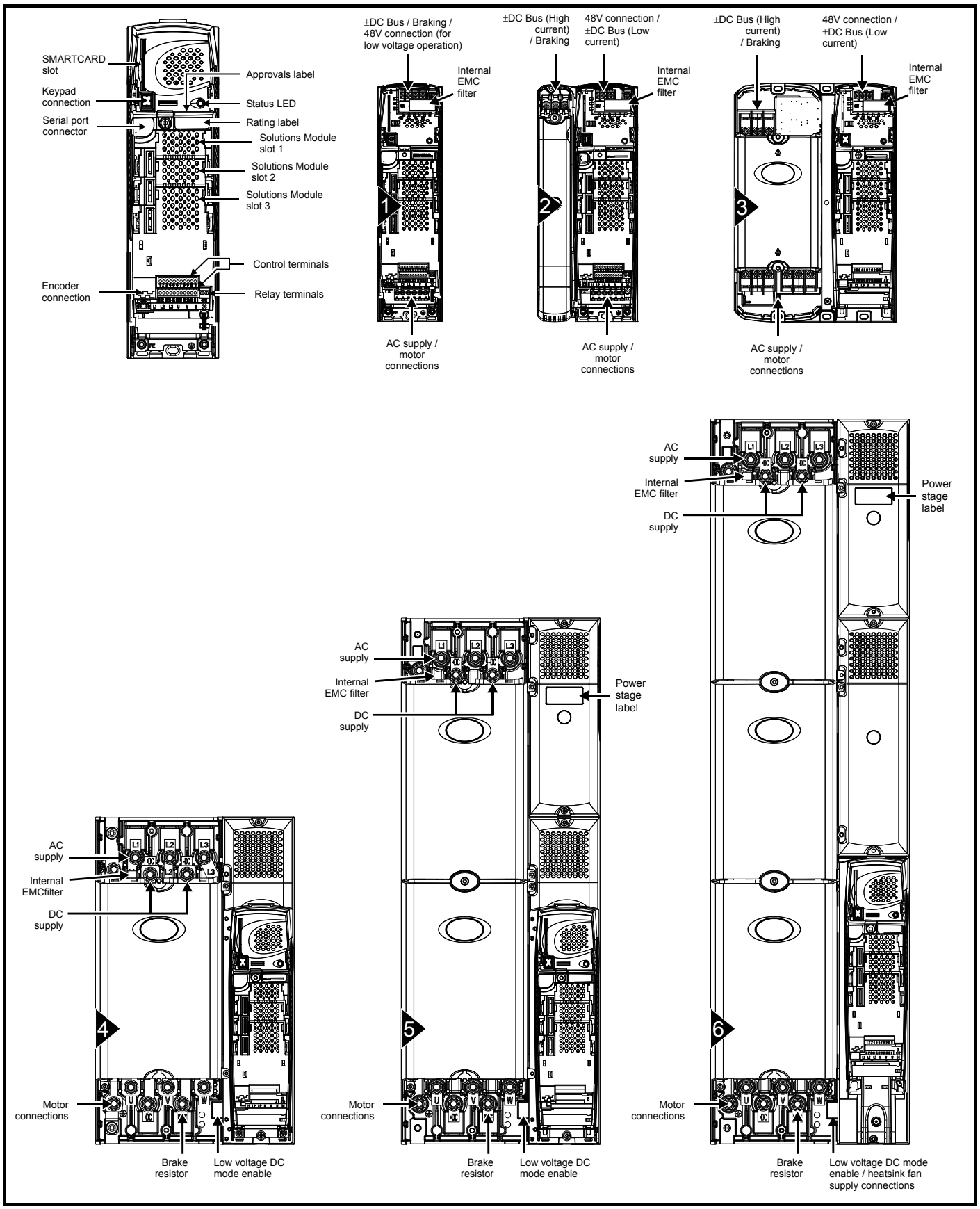

NOTE

The size 6 drive requires a 24V supply for the heatsink fan.

2.6 Nameplate description

See Figure 2-1 and Figure 2-2 for location of rating labels.

Figure 2-3 Typical drive rating labels for size 0

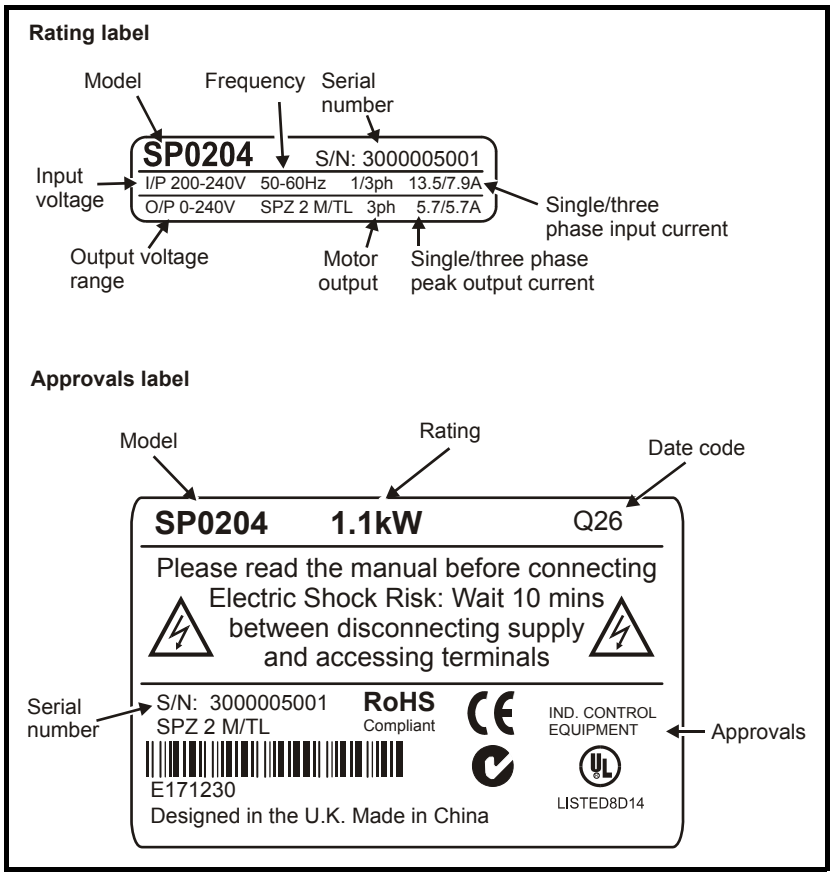

Figure 2-4 Typical drive rating labels for size 1 to 6 drives

Rating label (size 1 to 6)

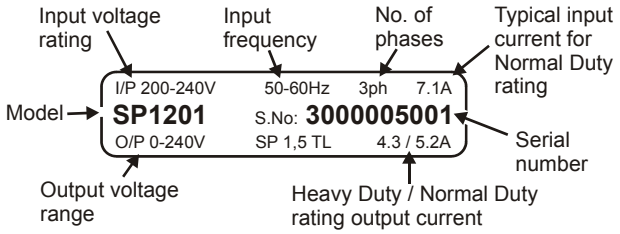

Approvals label (Size 1 to 6)

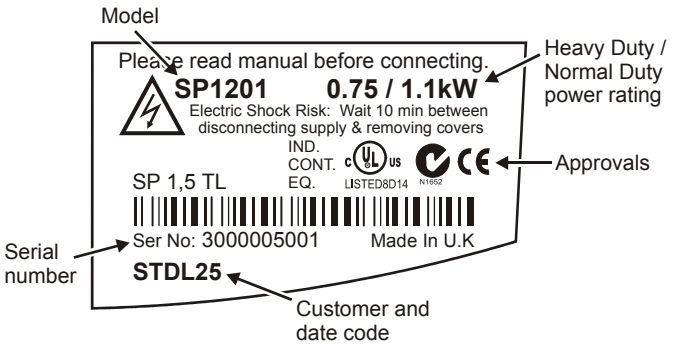

Key to approvals

CE	CE approval	Europe
N1652	C Tick approval	Australia
c UL us	UL / cUL approval	USA & Canada

Power stage label (Size 5 and 6 only)

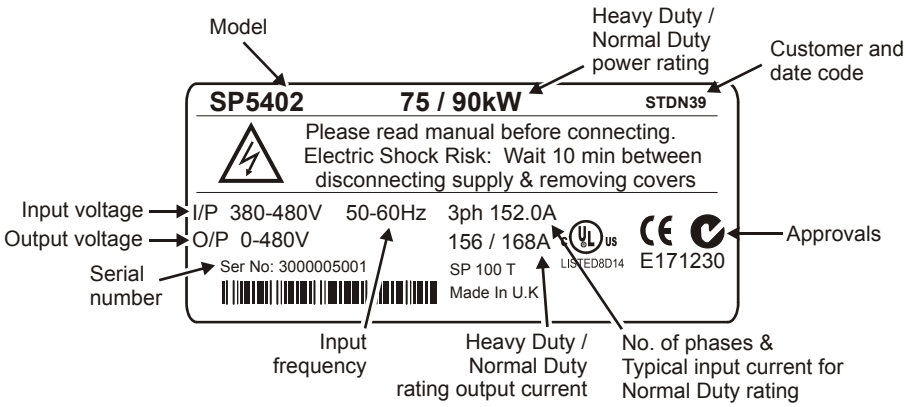

2.7 Options

Figure 2-5 Options available with Unidrive SP

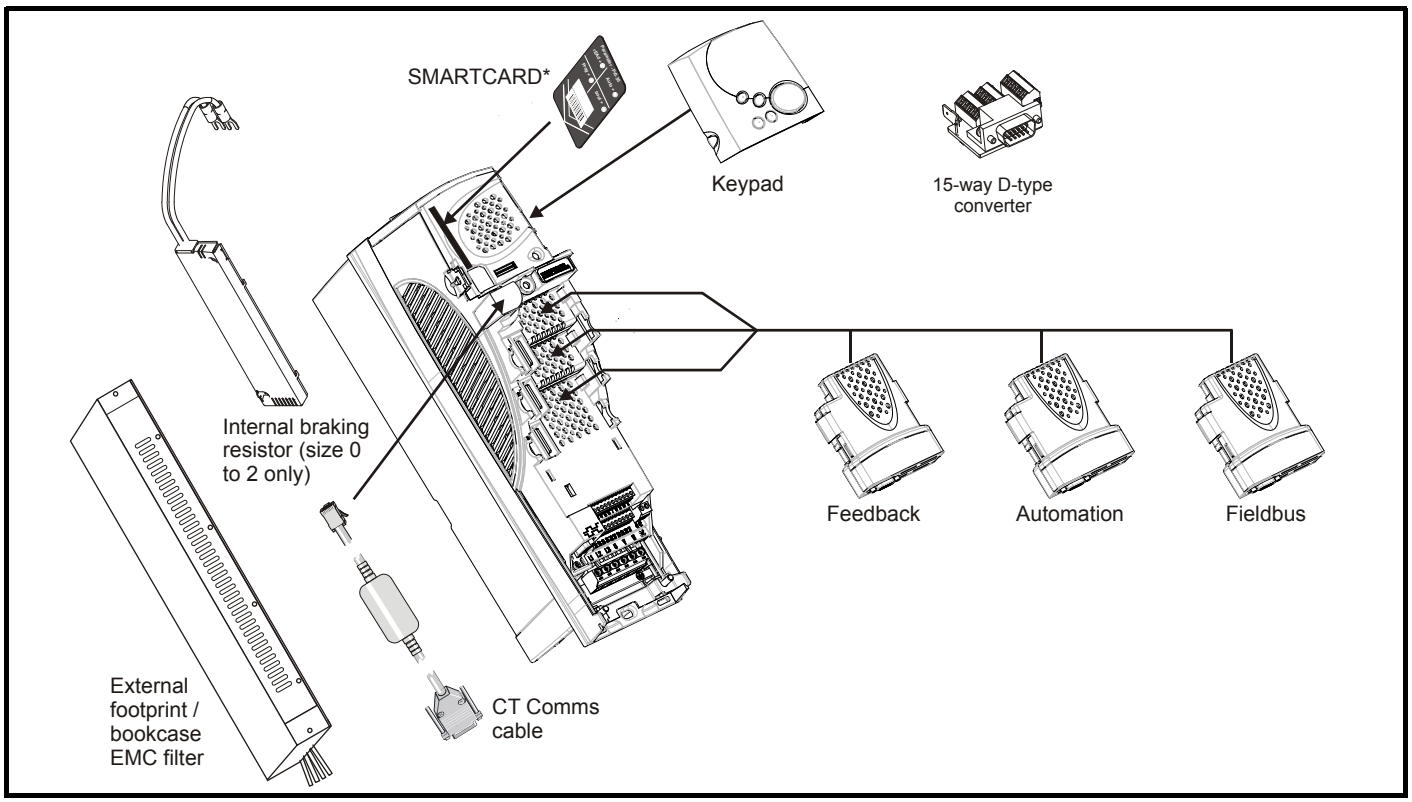

* A SMARTCARD is provided as standard. For further information, refer to Chapter 9 *SMARTCARD operation* on page 150.

WARNING Be aware of possible live terminals when inserting or removing the SMATRTCARD

All Solutions Modules are color-coded in order to make identification easy. The following table shows the color-code key and gives further details on their function.

Table 2-8 Solutions Module identification

Type	Solutions Module	Color	Name	Further Details
Feedback		Light Green	SM-Universal Encoder Plus	**Universal Feedback interface** Feedback interface for the following devices: **Inputs** • Incremental encoders • SinCos encoders • SSI encoders • EnDat encoders **Outputs** • Quadrature • Frequency and direction • SSI simulated outputs
		Light Blue	SM-Resolver	**Resolver interface** Feedback interface for resolvers. Simulated quadrature encoder outputs
		Brown	SM-Encoder Plus	**Incremental encoder interface** Feedback interface for incremental encoders without commutation signals. No simulated encoder outputs available
		Dark Brown	SM-Encoder Output Plus	**Incremental encoder interface** Feedback interface for incremental encoders without commutation signals. Simulated encoder output for quadrature, frequency and direction signals

Table 2-8 Solutions Module identification

Type	Solutions Module	Color	Name	Further Details
Feedback		N/A	15-way D-type converter	**Drive encoder input converter** Provides screw terminal interface for encoder wiring and spade terminal for shield
		N/A	Single ended encoder interface (15V or 24V)	**Single ended encoder interface** Provides an interface for single ended ABZ encoder signals, such as those from hall effect sensors. 15V and 24V versions are available.
	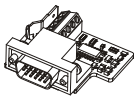	N/A	Reference Marker Signal Interface	**Reference Marker Signal Interface** Provides an interface that converts the 1Vpp reference marker signal found on some SinCos into a differential EIA485 compatible marker pulse signal for use by the drive. The sine and cosine signals from the encoder are passed to the drive unchanged.
	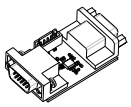	N/A	ERN1387 Encoder Interface Board	**ERN1387 Encoder Interface Board** Provides an interface for Heidenhain ERN1387 and ERN487 SinCos encoder which use a single SinCos cycle per revolution commutation track. A SM-Universal Encoder Plus module is required to use this interface board.
Automation (I/O Expansion)		Yellow	SM-I/O Plus	**Extended I/O interface** Increases the I/O capability by adding the following to the existing I/O in the drive: • Digital inputs x 3 • Digital I/O x 3 • Analog inputs (voltage) x 2 • Analog output (voltage) x 1 • Relay x 2
		Yellow	SM-I/O 32	**Extended I/O interface** Increase the I/O capability by adding the following to the existing I/O in the drive: • High speed digital I/O x 32 • +24V output
		Dark Yellow	SM-I/O Lite	**Additional I/O** 1 x Analog input (± 10V bi-polar or current modes) 1 x Analog output (0-10V or current modes) 3 x Digital input and 1 x Relay
		Dark Red	SM-I/O Timer	**Additional I/O with real time clock** As per SM-I/O Lite but with the addition of a Real Time Clock for scheduling drive running
		Turquoise	SM-I/O PELV	**Isolated I/O to NAMUR NE37 specifications** For chemical industry applications 1 x Analog input (current modes) 2 x Analog outputs (current modes) 4 x Digital input / outputs, 1 x Digital input, 2 x Relay outputs
		Olive	SM-I/O 120V	**Additional I/O conforming to IEC 61131-2 120Vac** 6 digital inputs and 2 relay outputs rated for 120Vac operation
		Cobalt Blue	SM-I/O 24V Protected	**Additional I/O with overvoltage protection up to 48V** 2 x Analog outputs (current modes) 4 x Digital input / outputs, 3 x Digital inputs, 2 x Relay outputs

Table 2-8 Solutions Module identification

Type	Solutions Module	Color	Name	Further Details
Automation (Applications)		Dark Green	SM-Applications	**Applications Processor (with CTNet)** 2nd processor for running pre-defined and /or customer created application software with CTNet support
		White	SM-Applications Lite	**Applications Processor** 2nd processor for running pre-defined and /or customer created application software
		Dark Blue	SM-EZMotion	**Motion Controller** $1^1/_2$ axis motion controller with processor for running customer created application specific software
		Moss Green	SM-Applications Plus	**Applications Processor (with CTNet)** 2nd processor for running pre-defined and /or customer created application software with CTNet support. Enhanced performance over SM-Applications
		White	SM-Applications Lite V2	**Applications Processor** 2nd processor for running pre-defined and /or customer created application software. Enhanced performance over SM-Applications Lite
		Golden brown	SM-Register	**Applications Processor** 2nd processor for running position capture functionality with CTNet support
Fieldbus		Purple	SM-PROFIBUS-DP-V1	**Profibus option** PROFIBUS DP adapter for communications with the drive
		Medium Grey	SM-DeviceNet	**DeviceNet option** Devicenet adapter for communications with the drive
		Dark Grey	SM-INTERBUS	**Interbus option** Interbus adapter for communications with the drive
		Pink	SM-CAN	**CAN option** CAN adapter for communications with the drive
		Light Grey	SM-CANopen	**CANopen option** CANopen adapter for communications with the drive
		Red	SM-SERCOS	**SERCOS option** Class B compliant. Torque velocity and position control modes supported with data rates (bit/s): 2MB, 4MB, 8MB and 16MB. Minimum 250µs network cycle time. Two digital high speed probe inputs 1µs for position capture
		Beige	SM-Ethernet	**Ethernet option** 10 base-T / 100 base-T; Supports web pages, SMTP mail and multiple protocols: DHCP IP addressing; Standard RJ45 connection
		Brown Red	SM-EtherCAT	**EtherCAT option** EtherCAT adapter for communications with the drive
		Pale Green	SM-LON	**LonWorks option** LonWorks adapter for communications with the drive
SLM		Orange	SM-SLM	**SLM interface** The SM-SLM allows SLM feedback to be connected directly to the Unidrive SP drive and allows operation in either of the following modes: • Encoder only mode • Host mode

Table 2-9 Keypad identification

Type	Keypad	Name	Further Details
Keypad		SP0 Keypad	**LED keypad option** Keypad with a LED display for size 0
	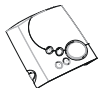	SM-Keypad	**LED keypad option** Keypad with a LED display for size 1 to 9
	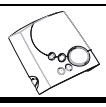	SM-Keypad Plus	**LCD keypad option** Keypad with an alpha-numeric LCD display with Help function

2.8 Items supplied with the drive

The drive is supplied with a printed manual, a SMARTCARD, a safety information booklet, an accessory kit box including the items shown in Table , and a CD ROM containing all related product documentation and software tools.

Table 2-10 Parts supplied with the drive

Description	Size 0	Size 1	Size 2	Size 3	Size 4	Size 5	Size 6
Control connectors	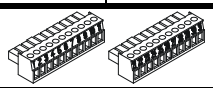						
Relay connector							
UL warning label							
Grounding bracket	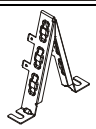						
Through panel mounting gasket		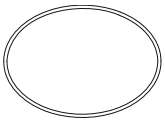					
Through panel mounting bracket		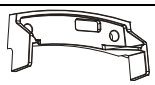			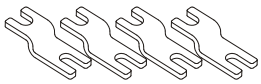		
Surface mounting brackets		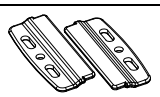	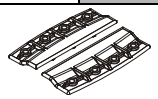				
Top surface mounting brackets						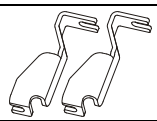	
Nylon washers							
Sealing clips					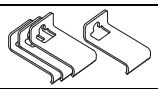		
Mounting screws							
Grounding clamp		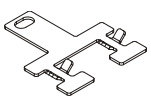		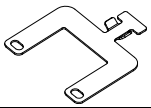			
Ground cable bridge and M5 nuts			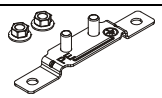				
DC terminal cover grommets							

Table 2-10 Parts supplied with the drive

Description	Size 0	Size 1	Size 2	Size 3	Size 4	Size 5	Size 6
Ferrite ring							
Supply and motor connector							
Ground screws	 M6x12						
Fan supply connector							
IP54 gasket							
IP54 insert							
Finger guard grommets					 Single (10 off)		 Double (10 off)

3 Mechanical Installation

This chapter describes how to use all mechanical details to install the drive. The drive is intended to be installed in an enclosure. Key features of this chapter include:

- Through-hole mounting
- IP54 as standard or through-panel mounting
- Enclosure sizing and layout
- Solutions Module installing
- Terminal location and torque settings

3.1 Safety information

WARNING

Follow the instructions
The mechanical and electrical installation instructions must be adhered to. Any questions or doubt should be referred to the supplier of the equipment. It is the responsibility of the owner or user to ensure that the installation of the drive and any external option unit, and the way in which they are operated and maintained, comply with the requirements of the Health and Safety at Work Act in the United Kingdom or applicable legislation and regulations and codes of practice in the country in which the equipment is used.

WARNING

Competence of the installer
The drive must be installed by professional assemblers who are familiar with the requirements for safety and EMC. The assembler is responsible for ensuring that the end product or system complies with all the relevant laws in the country where it is to be used.

WARNING

Many of the drives in this product range weigh in excess of 15kg (33lb). Use appropriate safeguards when lifting these models.
A full list of drive weights can be found in section 12.1.19 *Weights* on page 273.

WARNING

Enclosure
The drive is intended to be mounted in an enclosure which prevents access except by trained and authorized personnel, and which prevents the ingress of contamination. It is designed for use in an environment classified as pollution degree 2 in accordance with IEC 60664-1. This means that only dry, non-conducting contamination is acceptable.

3.2 Planning the installation

The following considerations must be made when planning the installation:

3.2.1 Access

Access must be restricted to authorized personnel only. Safety regulations which apply at the place of use must be complied with.

The IP (Ingress Protection) rating of the drive is installation dependent. For further information, please refer to section 3.9 *Enclosing standard drive for high environmental protection* on page 50.

3.2.2 Environmental protection

The drive must be protected from:

- moisture, including dripping water or spraying water and condensation. An anti-condensation heater may be required, which must be switched off when the drive is running.
- contamination with electrically conductive material
- contamination with any form of dust which may restrict the fan, or impair airflow over various components
- temperature beyond the specified operating and storage ranges
- corrosive gasses

NOTE

During installation it is recommended that the vents on the drive are covered to prevent debris (e.g. wire off-cuts) from entering the drive.

3.2.3 Cooling

The heat produced by the drive must be removed without its specified operating temperature being exceeded. Note that a sealed enclosure gives much reduced cooling compared with a ventilated one, and may need to be larger and/or use internal air circulating fans.

For further information, refer to section 3.6.2 *Enclosure sizing* on page 48.

3.2.4 Electrical safety

The installation must be safe under normal and fault conditions. Electrical installation instructions are given in Chapter 4 *Electrical installation on page 67*.

3.2.5 Fire protection

The drive enclosure is not classified as a fire enclosure. A separate fire enclosure must be provided.

For installation in the USA, a NEMA 12 enclosure is suitable.

For installation outside the USA, the following (based on IEC 62109-1, standard for PV inverters) is recommended.

Enclosure can be metal and/or polymeric, polymer must meet requirements which can be summarized for larger enclosures as using materials meeting at least UL 94 class 5VB at the point of minimum thickness.

Air filter assemblies to be at least class V-2.

The location and size of the bottom shall cover the area shown in Figure 3-1. Any part of the side which is within the area traced out by the 5° angle is also considered to be part of the bottom of the fire enclosure.

Figure 3-1 Fire enclosure bottom layout

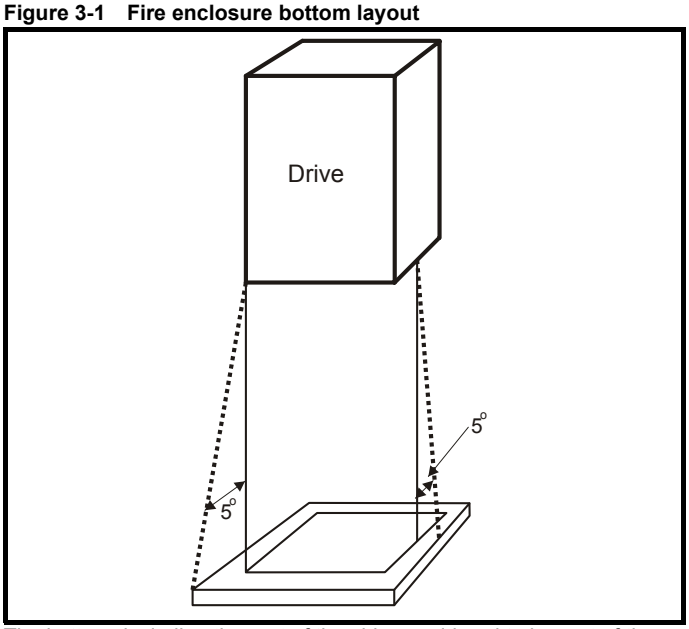

The bottom, including the part of the side considered to be part of the bottom, must be designed to prevent escape of burning material - either by having no openings or by having a baffle construction. This means that openings for cables etc. must be sealed with materials meeting the 5VB requirement, or else have a baffle above. See Figure 3-2 for acceptable baffle construction. This does not apply for mounting in an enclosed electrical operating area (restricted access) with concrete floor.

Figure 3-2 Fire enclosure baffle construction

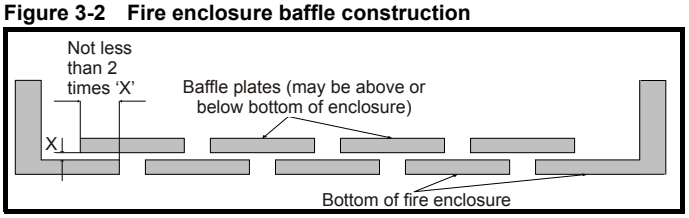

3.2.6 Electromagnetic compatibility

Variable speed drives are powerful electronic circuits which can cause electromagnetic interference if not installed correctly with careful attention to the layout of the wiring.

Some simple routine precautions can prevent disturbance to typical industrial control equipment.

If it is necessary to meet strict emission limits, or if it is known that electromagnetically sensitive equipment is located nearby, then full precautions must be observed. In-built into the drive, is an internal EMC filter, which reduces emissions under certain conditions. If these conditions are exceeded, then the use of an external EMC filter may be required at the drive inputs, which must be located very close to the drives. Space must be made available for the filters and allowance made for carefully segregated wiring. Both levels of precautions are covered in section 4.11 *EMC (Electromagnetic compatibility) on page 81*.

3.2.7 Hazardous areas

The drive must not be located in a classified hazardous area unless it is installed in an approved enclosure and the installation is certified.

3.3 Terminal cover removal



Isolation device
The AC supply must be disconnected from the drive using an approved isolation device before any cover is removed from the drive or before any servicing work is performed.



Stored charge
The drive contains capacitors that remain charged to a potentially lethal voltage after the AC supply has been disconnected. If the drive has been energized, the AC supply must be isolated at least ten minutes before work may continue.

Normally, the capacitors are discharged by an internal resistor. Under certain, unusual fault conditions, it is possible that the capacitors may fail to discharge, or be prevented from being discharged by a voltage applied to the output terminals. If the drive has failed in a manner that causes the display to go blank immediately, it is possible the capacitors will not be discharged. In this case, consult Control Techniques or their authorized distributor.

3.3.1 Removing the terminal covers

Size 0 is not installed with any terminal covers.
Size 1 is installed with two terminal covers: Control and DC terminal covers.

Size 2 is installed with three terminal covers: Control, High current DC / Braking and low voltage DC terminal covers.

Size 3 is installed with four terminal covers: Control, High current DC / Braking, low voltage DC and AC terminal covers.

Size 4, 5 and 6 are installed with three terminal covers: Control, input and output terminal covers.

In order to provide access to the mounting holes when a size 1, 2 or 3 drive is through-panel mounted, the control terminal cover must be removed. For size 3 the high current DC / Braking and AC terminal covers must also be removed. Once the drive has been mounted, the terminal covers can be replaced.

Figure 3-3 Location and identification of terminal covers

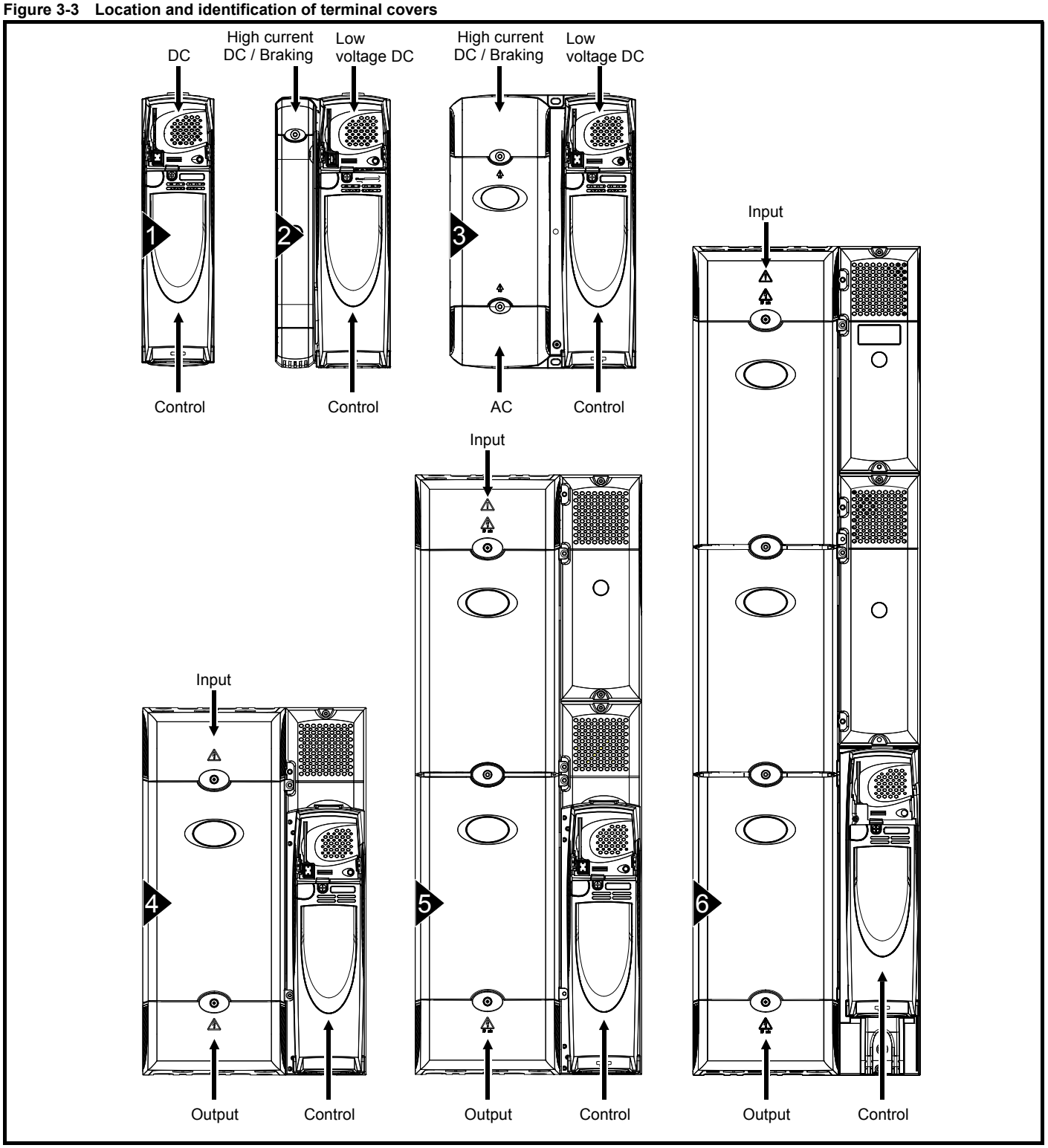

To remove a terminal cover, undo the screw and lift the terminal cover off as shown. The control terminal cover must be removed first before the DC (size 1) / low voltage DC (sizes 2 and 3) terminal cover can be removed.

When replacing the terminal covers the screws should be tightened with a maximum torque of 1 Nm (0.7 lb ft).

Figure 3-4 Removing the size 1 terminal covers

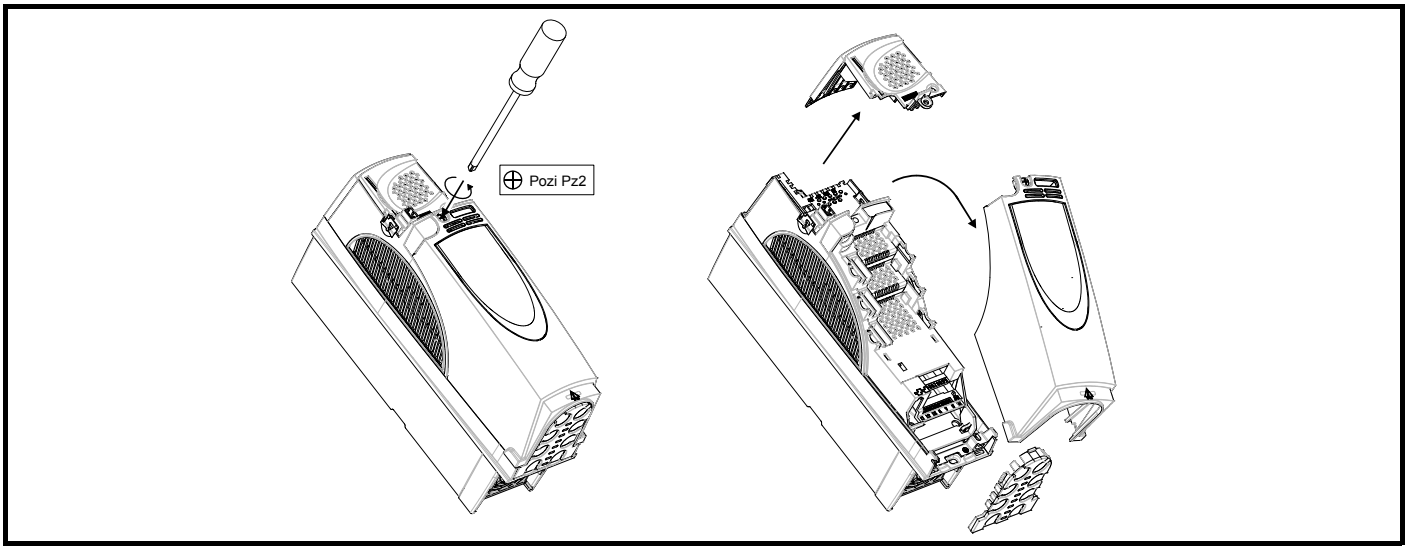

Figure 3-5 Removing the size 2 terminal covers

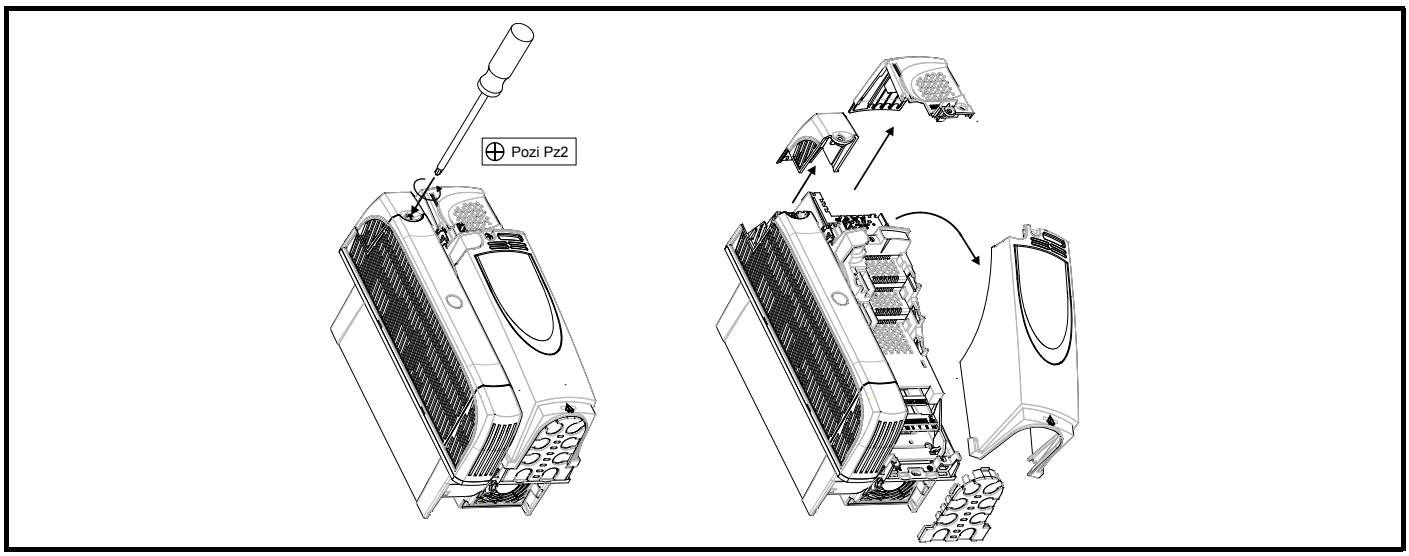

Figure 3-6 Removing the size 3 terminal covers

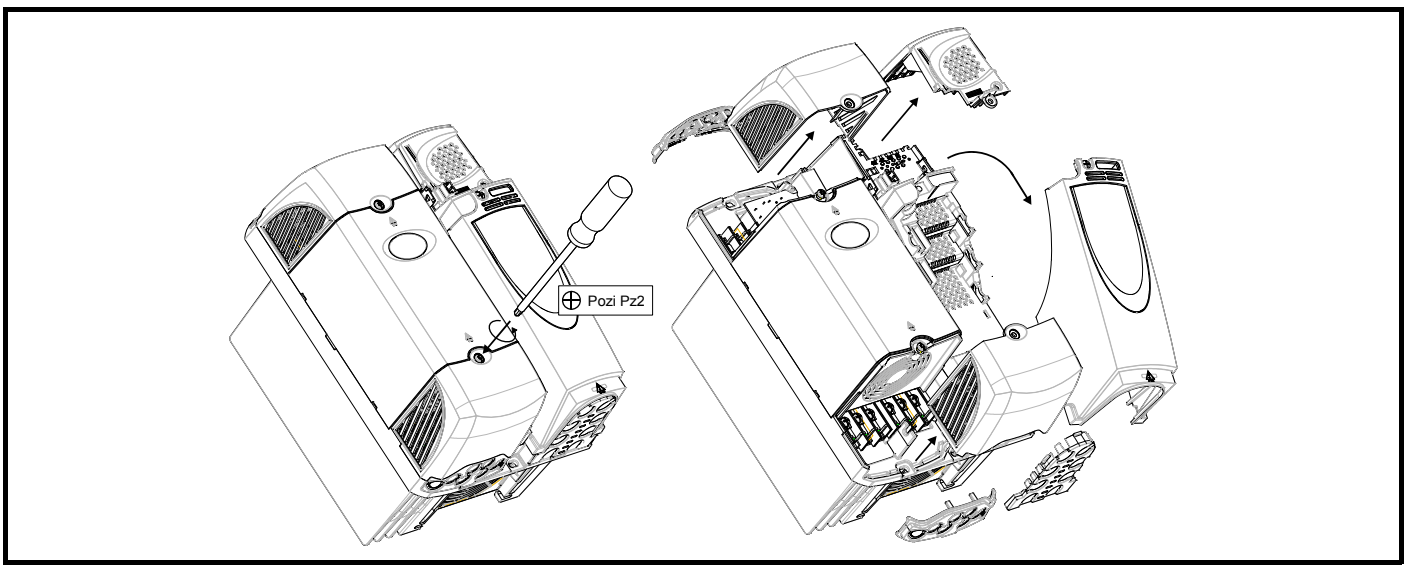

Figure 3-7 Removing the size 4, 5 and 6 terminal covers (size 4 illustrated)

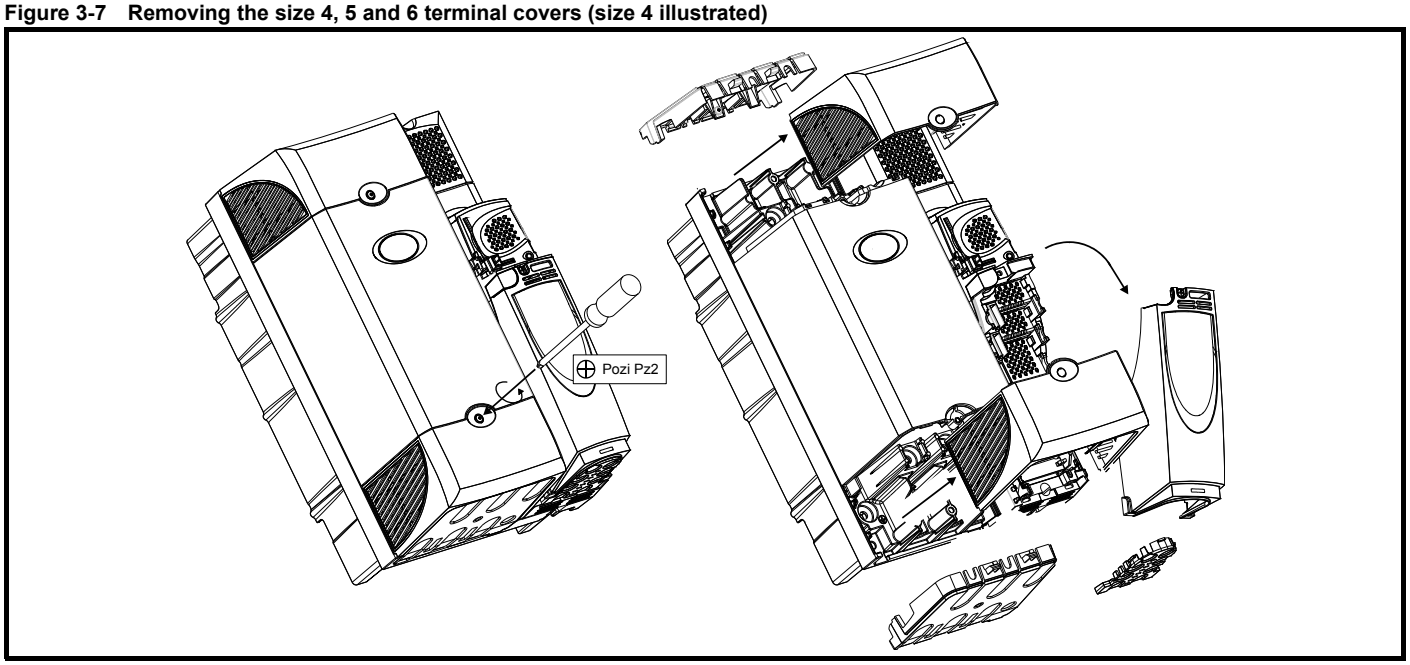

3.3.2 Removing the finger-guard and DC terminal cover break-outs

Figure 3-8 Removing the finger-guard break-outs

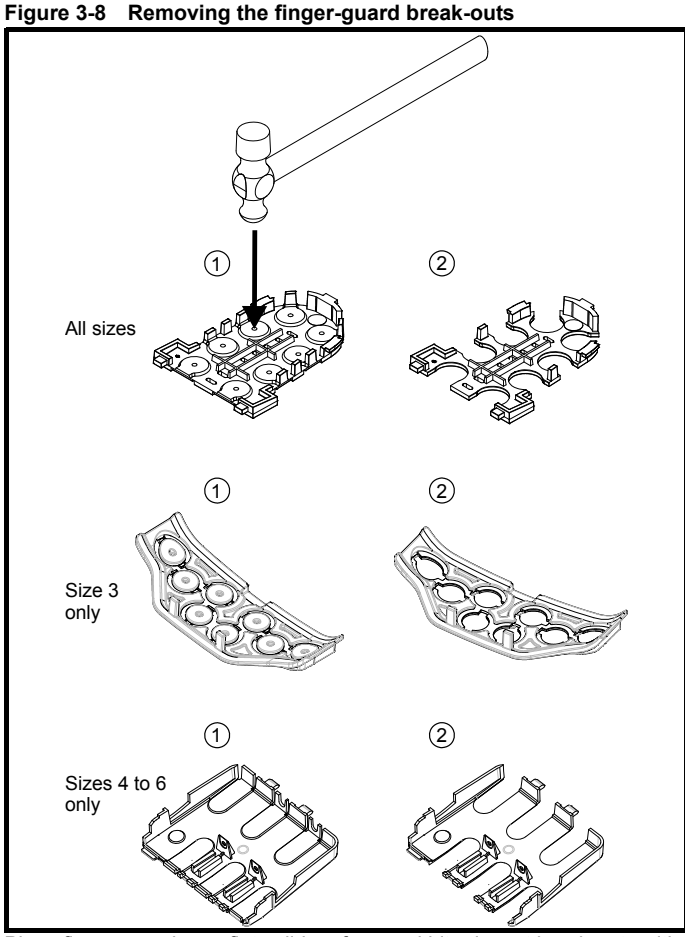

Place finger-guard on a flat solid surface and hit relevant break-outs with hammer as shown (1). Continue until all required break-outs are removed (2). Remove any flash / sharp edges once the break-outs are removed.

Figure 3-9 Removing the DC terminal cover break-outs

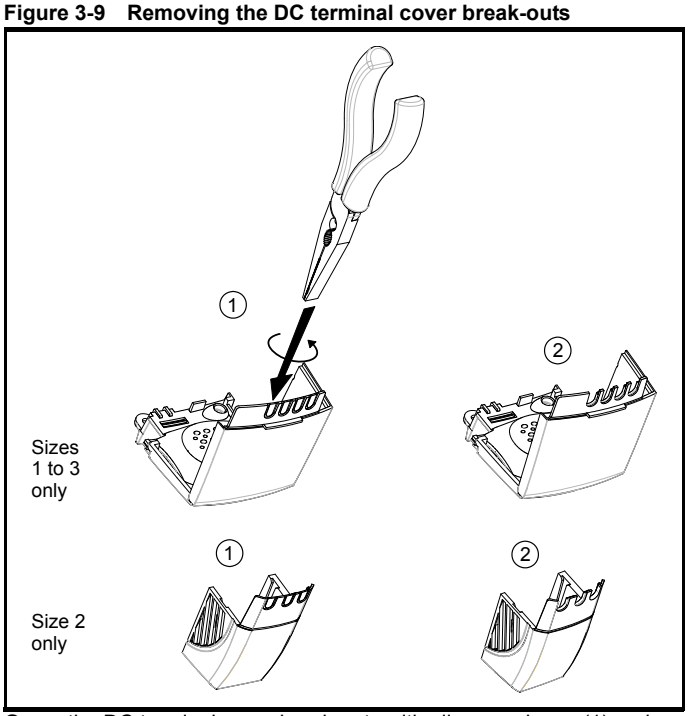

Grasp the DC terminal cover break-outs with pliers as shown (1) and twist to remove. Continue until all required break-outs are removed (2).

Remove any flash / sharp edges once the break-outs are removed. Use the DC terminal cover grommets supplied in the accessory box (Table on page 26) to maintain the seal at the top of the drive.

Grommets are supplied for the size 4 to 6 finger-guards. Two versions are available, allowing for either single or double cable entries. These are not required if the optional conduit box is installed.

Figure 3-10 Size 4 to 6 finger-guard grommets

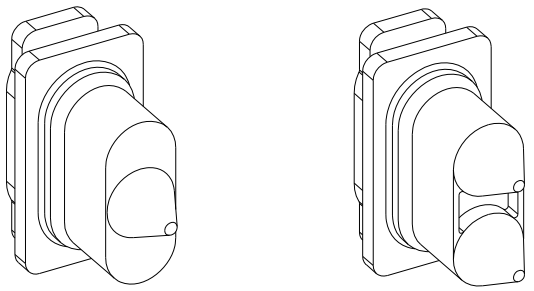

Single cable entry Double cable entry

The grommets are available as a kit of four grommets under the following part numbers:

- 9500-0074 Kit of four single entry grommets
- 9500-0075 Kit of four double entry grommets

WARNING

Size 4-6 finger guard grommets are required to maintain IP20 protection.

3.3.3 Instructions for fitting cable grommets to Unidrive SP size 4 to 6 power and ground terminals

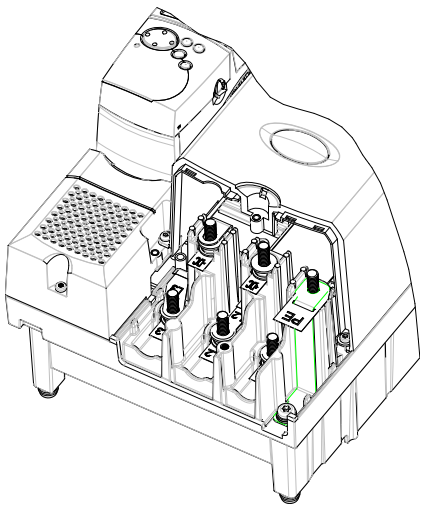

1. Remove terminal cover, gland plate and M10 terminal nuts.

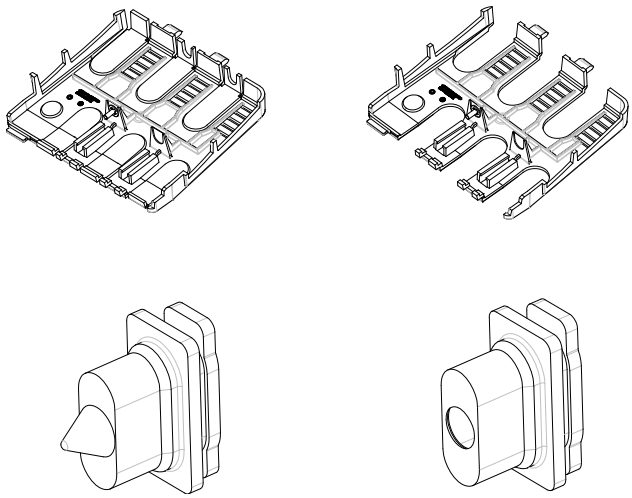

2. Remove breakouts as required in the gland plate - see Figure 3-8. Cut grommet cone to accomodate cable size ensuring a close fit.

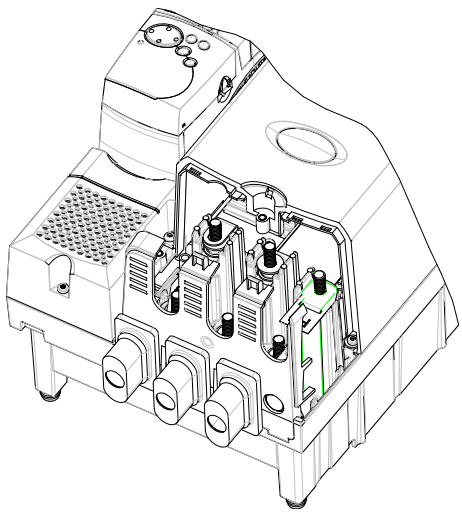

3. Fit 3 off grommets in the gland plate and re-assemble to drive.

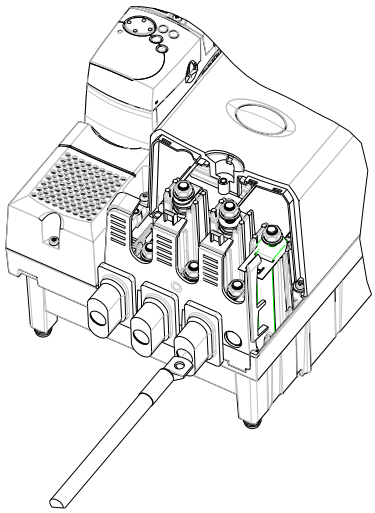

4. Push the crimped cable end into the entry hole of the grommet. (Lubrication may ease fitting of the cable).

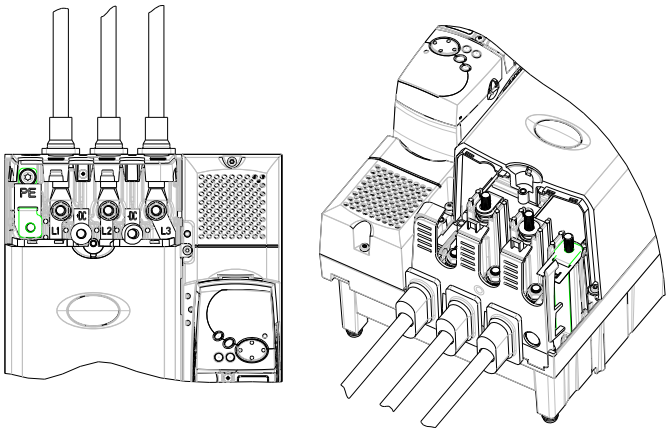

5. Assemble the remaining cables in the lower row, replace the M10 nuts and secure to 15 N m.

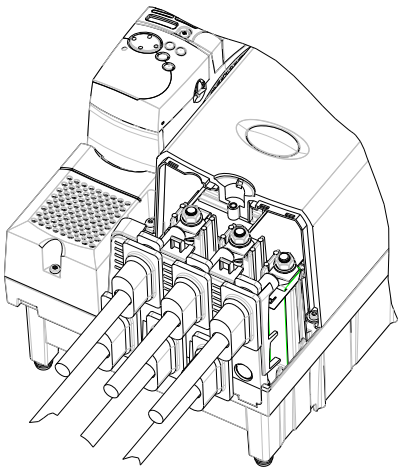

6. Follow similar procedure for top row.

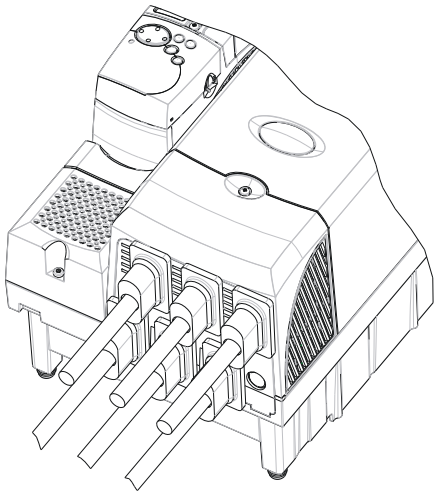

7. Replace terminal cover.

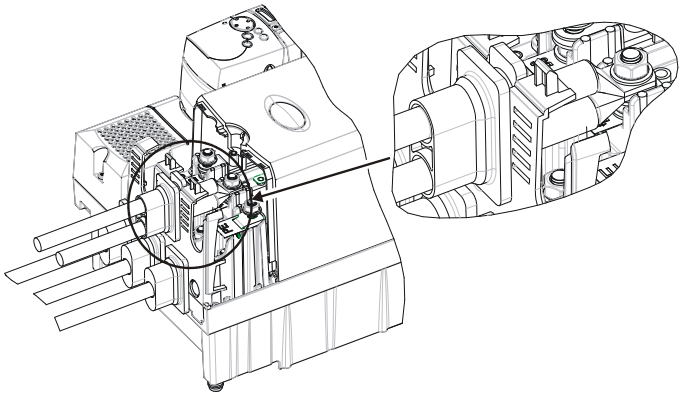

8. Installation of double grommets on the power terminals of a Unidrive SP size 6 module where two cables per phase are required.

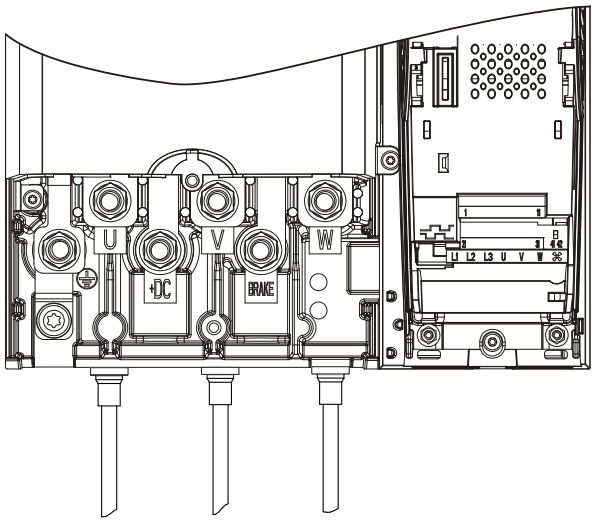

9. View showing the output terminals with grommets and power cables fitted.

3.4 Solutions Module / keypad installation / removal

CAUTION

Power down the drive before installing / removing the Solutions Module. Failure to do so may result in damage to the product.

Figure 3-11 Installation of a Solutions Module on size 0

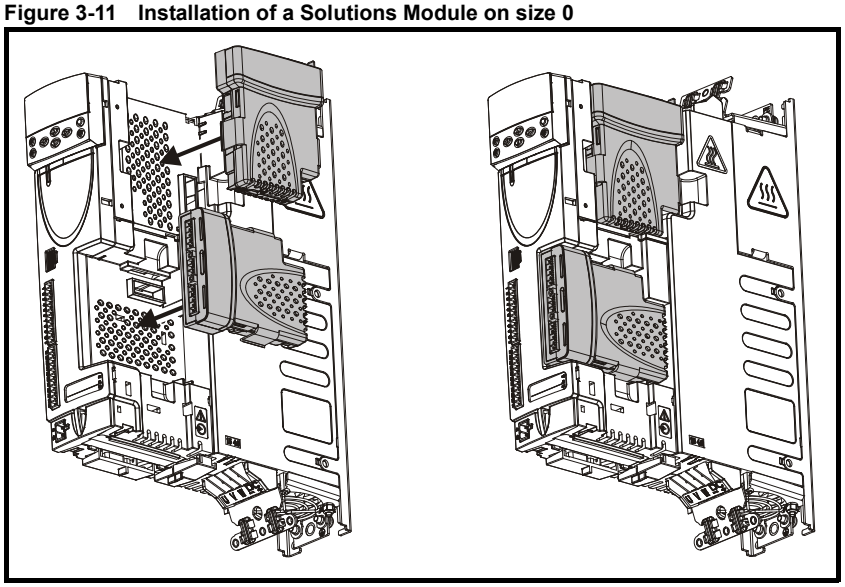

NOTE

On size 0 the protective tab from the Solutions Module slot must be removed before attempting to fit a Solutions Module.

Figure 3-12 Installation and removal of a Solutions Module on size 1 to 6

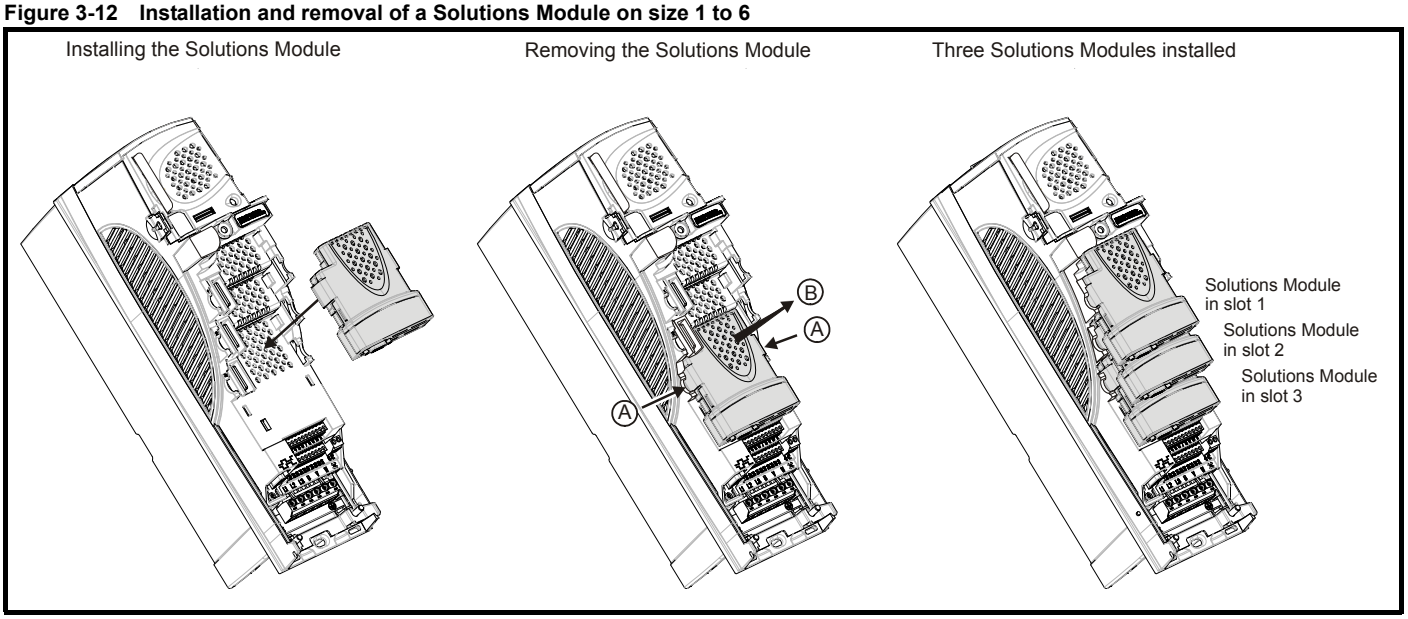

To install the Solutions Module, press down in the direction shown above until it clicks into place.

To remove the Solutions Module, press inwards at the points shown (A) and pull in the direction shown (B).

The drive has the facility for all three Solutions Module slots to be used at the same time, as illustrated.

NOTE

It is recommended that the Solutions Module slots are used in the following order: slot 3, slot 2 and slot 1.

WARNING

Be aware of possible live terminals when installing the keypad.

Figure 3-13 Installation of a keypad on size 0

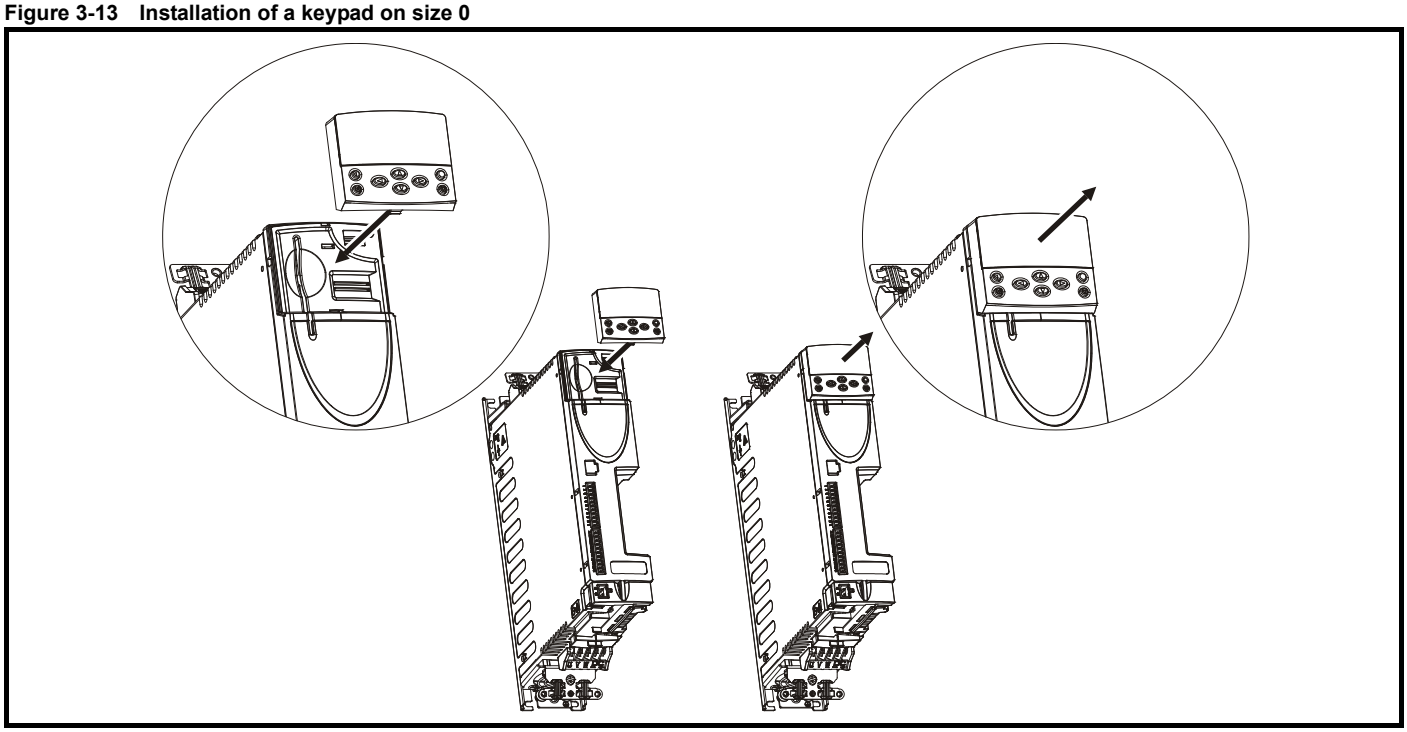

Figure 3-14 Installation and removal of a keypad on size 1 to 6

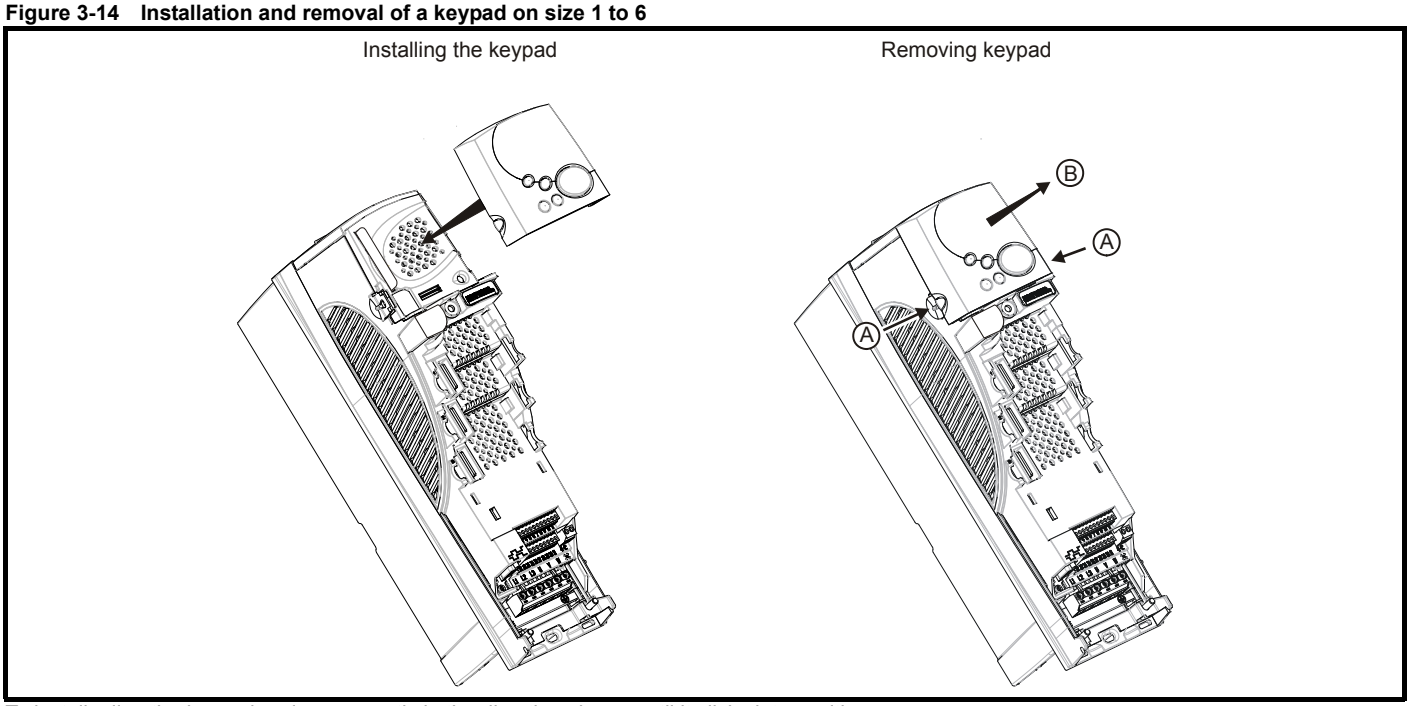

To install, align the keypad and press gently in the direction shown until it clicks into position.

To remove, while pressing the tabs inwards (A), gently lift the keypad in the direction indicated (B).

NOTE

The keypad can be installed / removed while the drive is powered up and running a motor, providing that the drive is not operating in keypad mode.

3.5 Mounting methods

Size 0 can be mounted using a DIN rail, either fixed at the top or the bottom of the drive (as illustrated in Figure 3-15). Two screws are required to fix the drive to the back-plate at the opposite end to the DIN rail.

Figure 3-15 Mounting the size 0 using a DIN rail

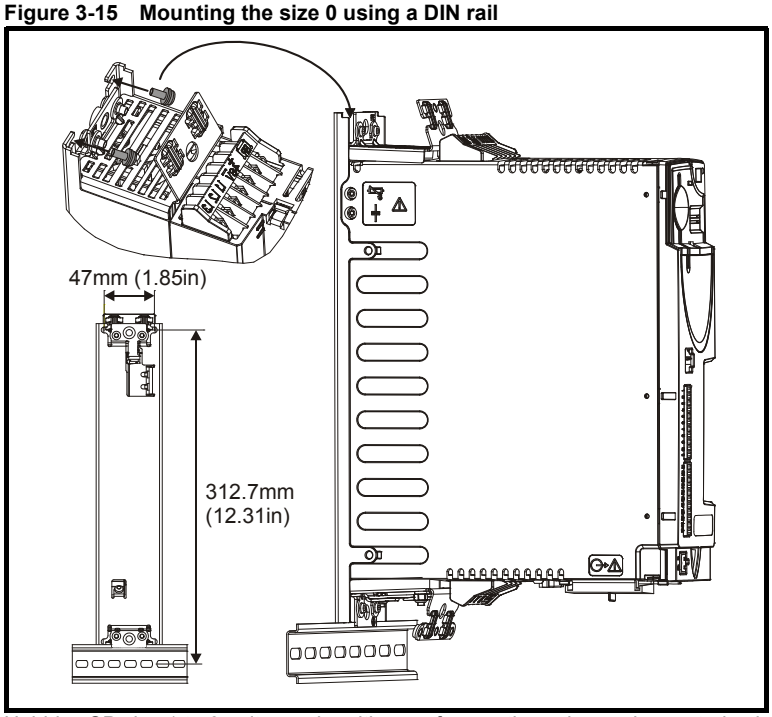

Unidrive SP size 1 to 6 units can be either surface or through-panel mounted using the appropriate brackets. Size 0 can only be surface mounted. The following drawings show the dimensions of the drive and mounting holes for each method to allow a back plate to be prepared.

WARNING

If the drive has been used at high load levels for a period of time, the heatsink can reach temperatures in excess of 70°C (158°F). Human contact with the heatsink should be prevented.

WARNING

Many of the drives in this product range weigh in excess of 15kg (33lb). Use appropriate safeguards when lifting these models.
A full list of drive weights can be found in section 12.1.19 *Weights* on page 273.

3.5.1 Ingress protection labels (Size 0 only)

Figure 3-16 Ingress protection

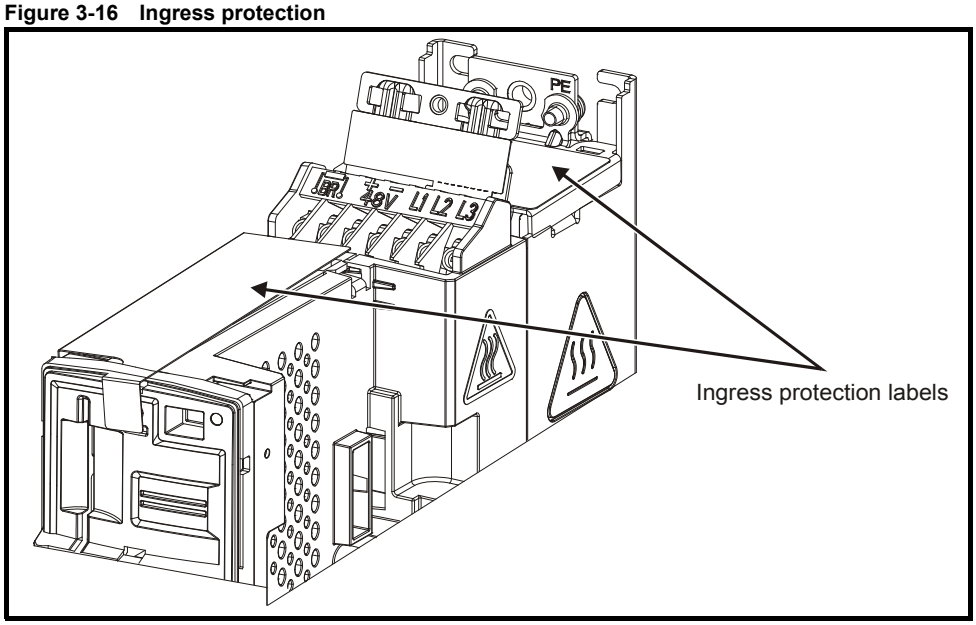

NOTE

The ingress protection labels (Figure 3-16 above), should remain in place while the drive is mounted, and until all the electrical wires have been connected. The labels should be removed before first power up.

3.5.2 Surface mounting

Figure 3-17 Surface mounting the size 0 drive

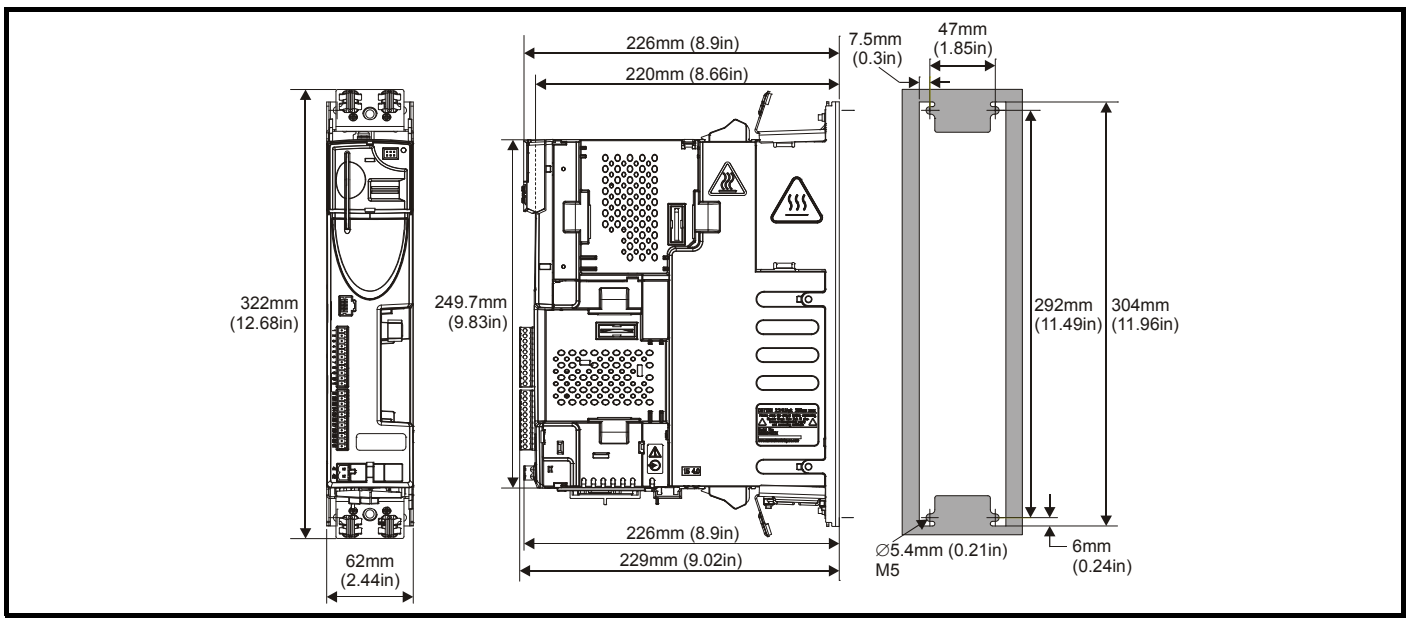

Figure 3-18 Surface mounting the size 1 drive

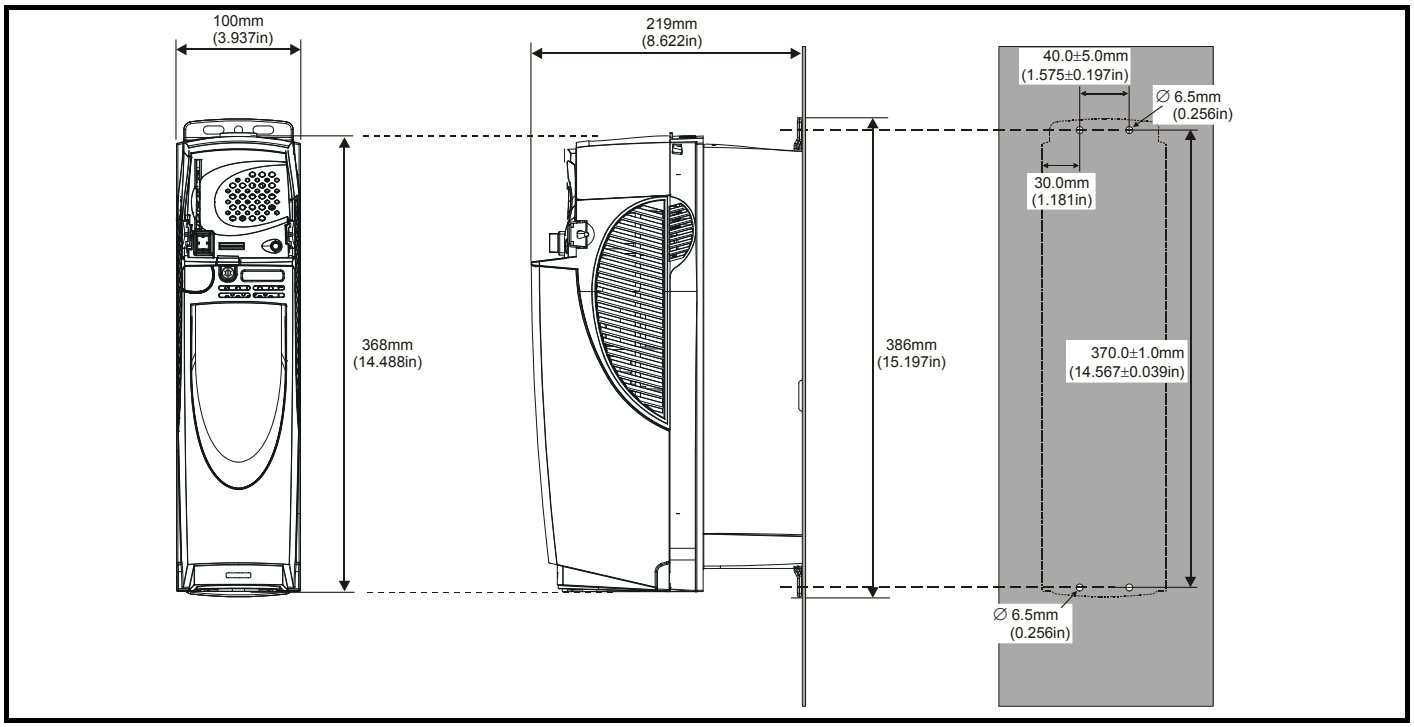

Figure 3-19 Surface mounting the size 2 drive

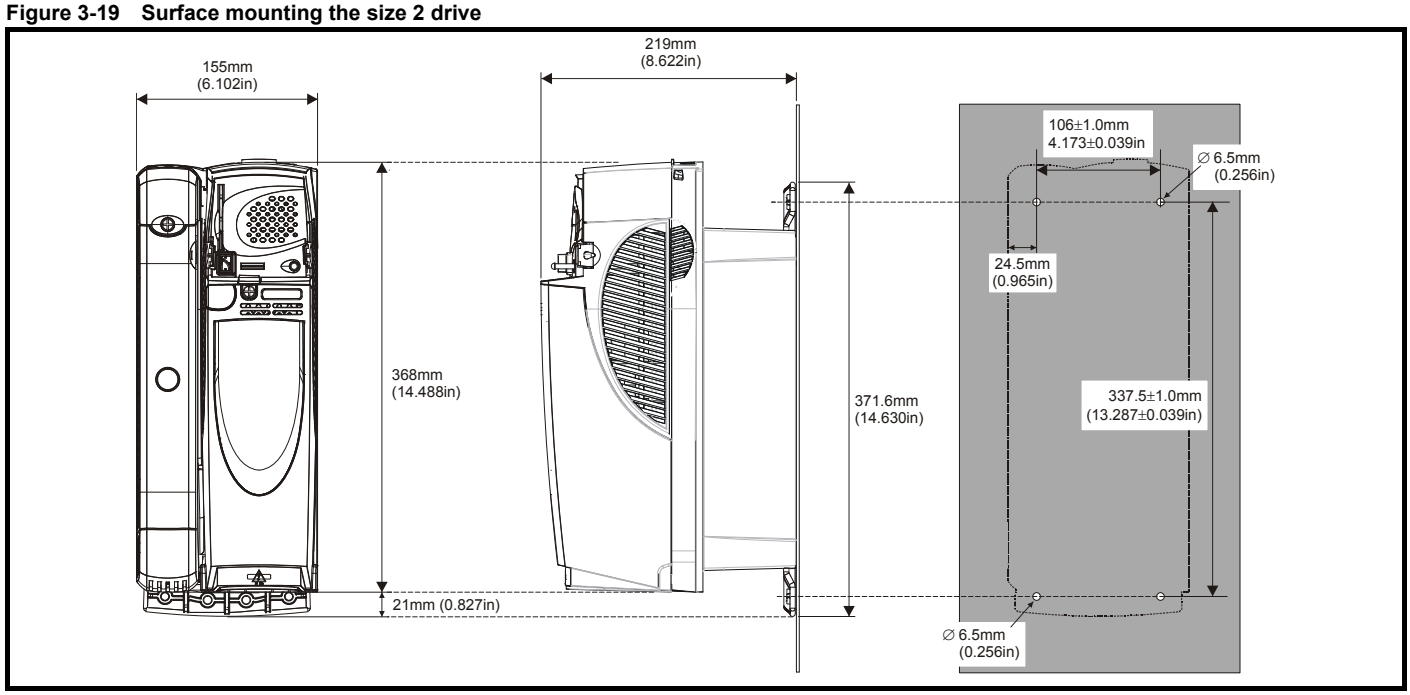

Figure 3-20 Surface mounting the size 3 drive

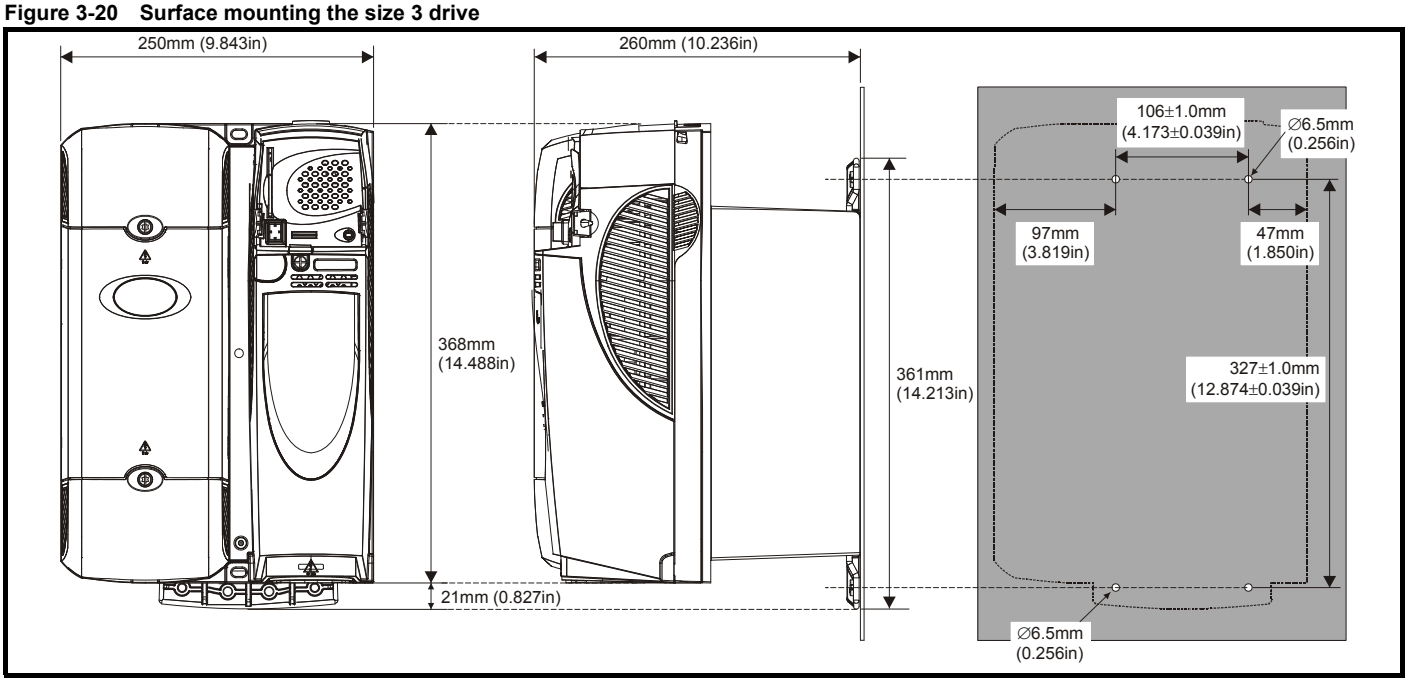

Figure 3-21 Surface mounting the size 4 drive

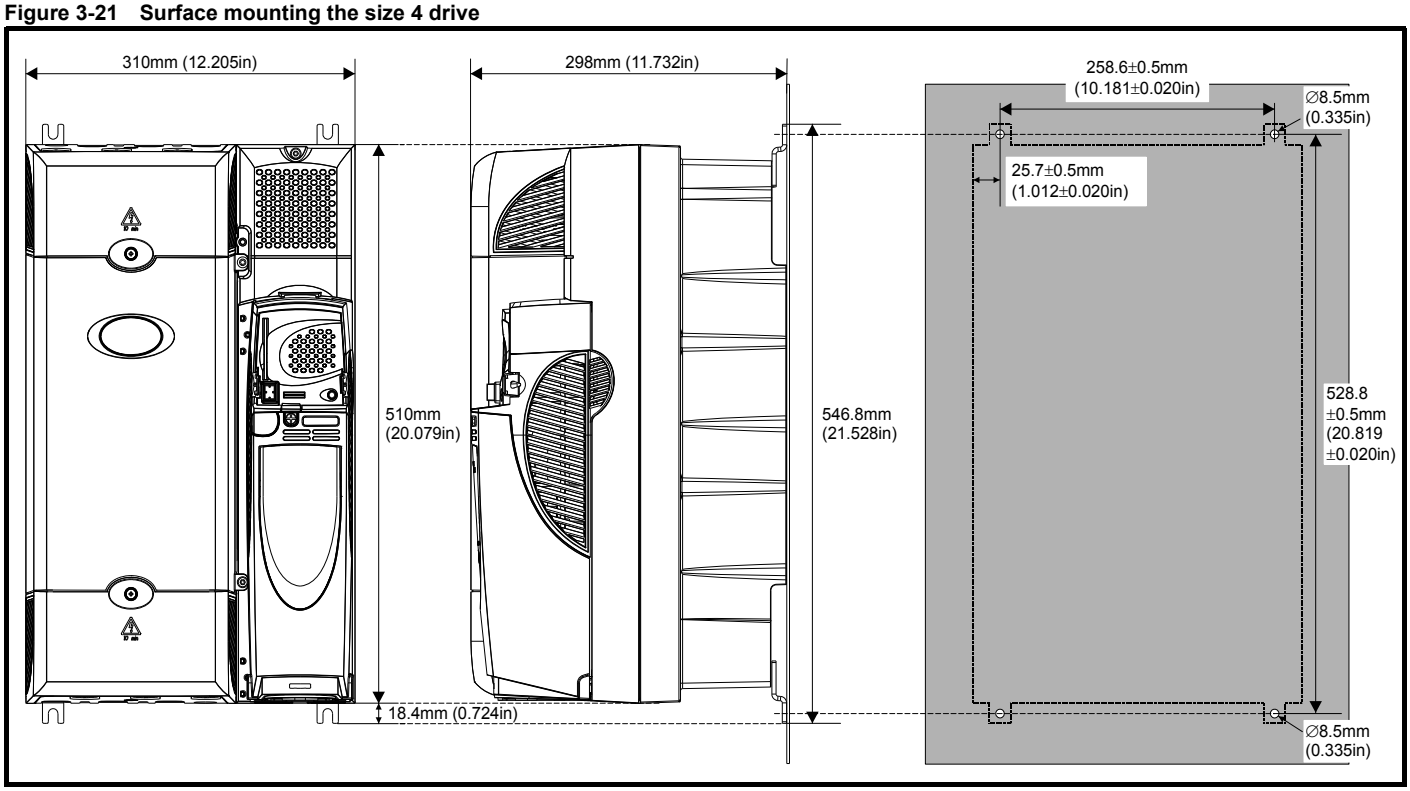

Figure 3-22 Surface mounting the size 5 drive

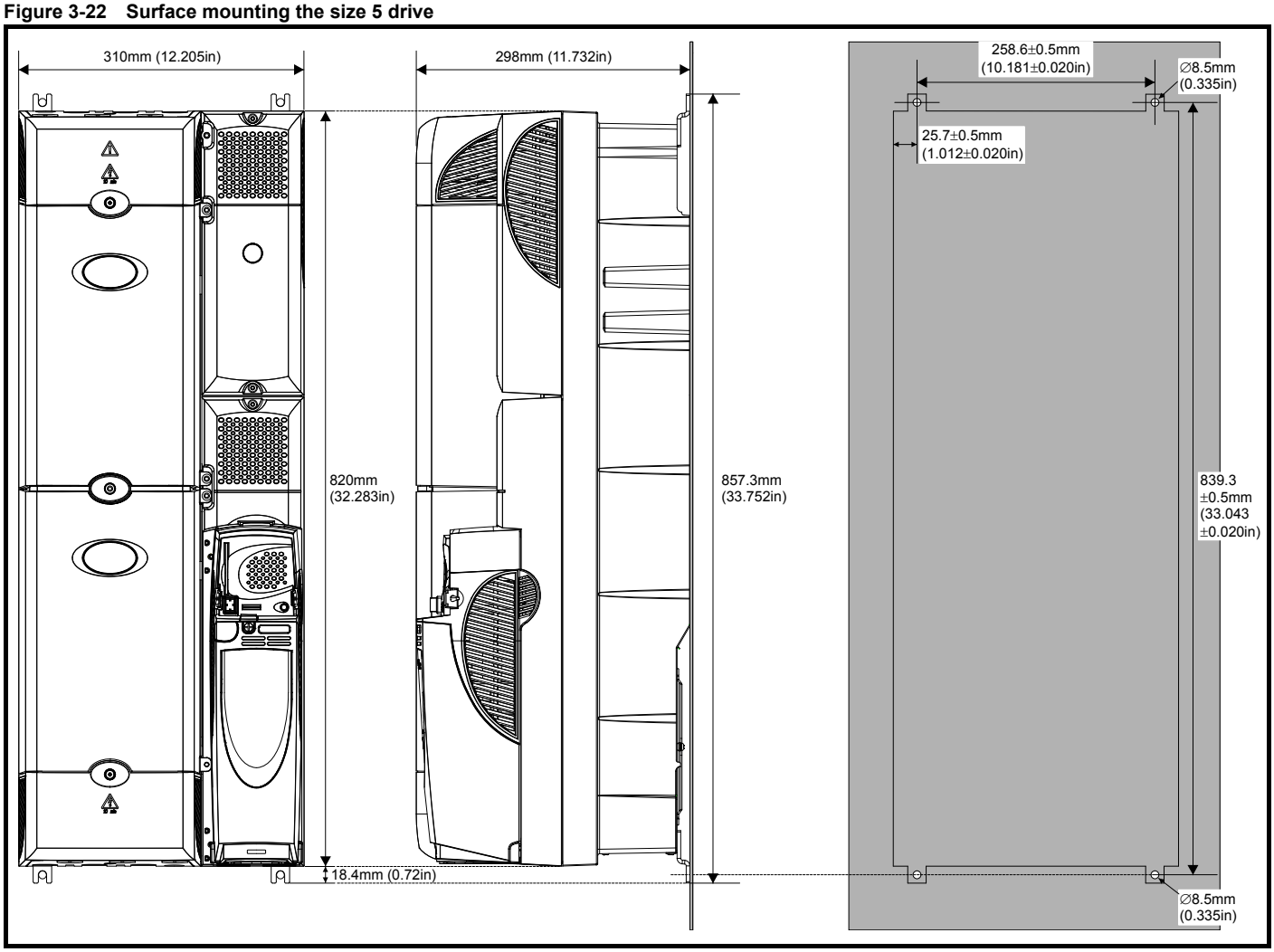

Figure 3-23 Surface mounting the size 6 drive

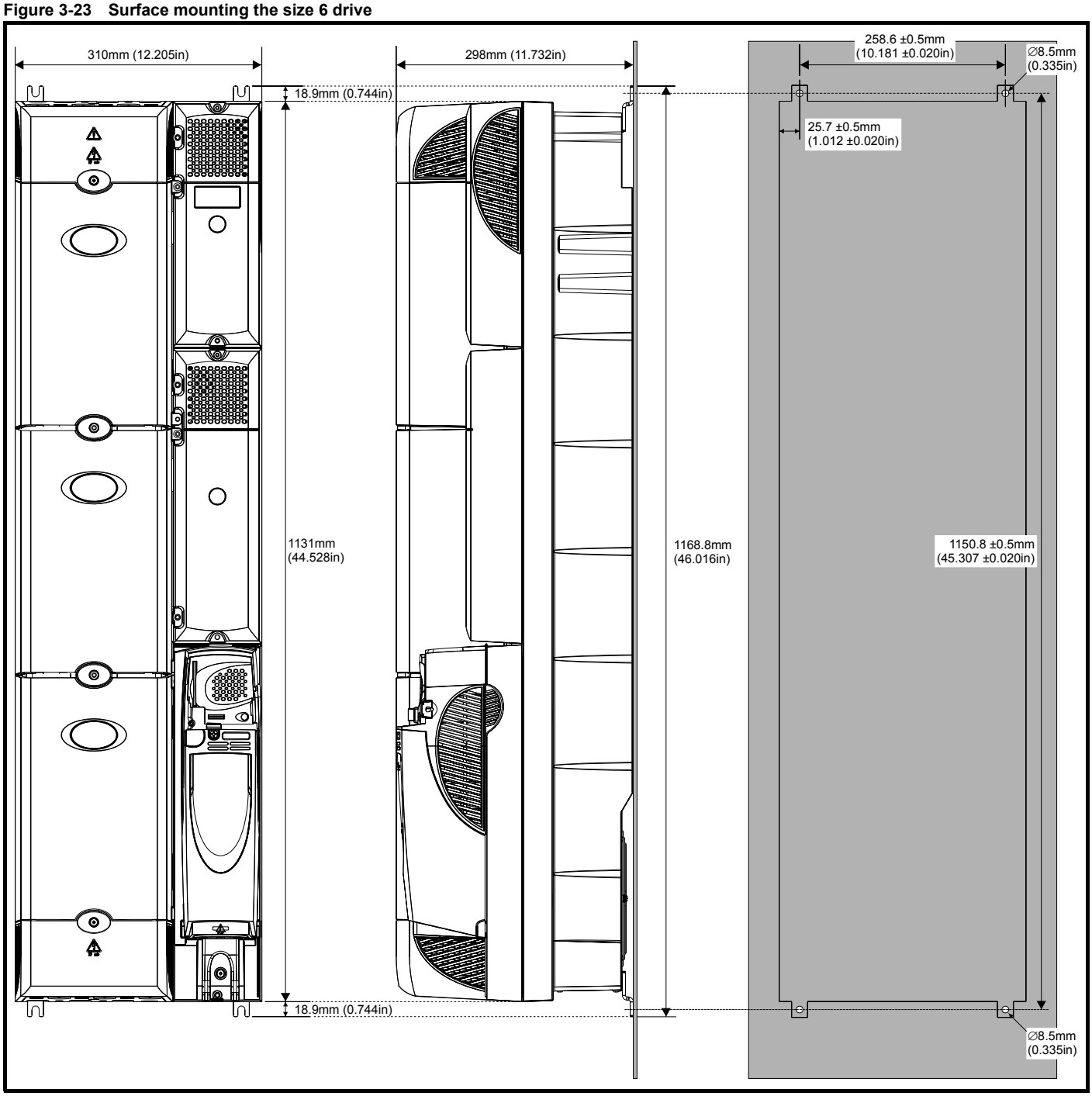

3.5.3 Through-panel mounting

When the drive is through-panel mounted, the main terminal cover(s) must be removed in order to provide access to the mounting holes. Once the drive has been mounted, the terminal cover(s) can be replaced.

Figure 3-24 Through-panel mounting the size 1 drive

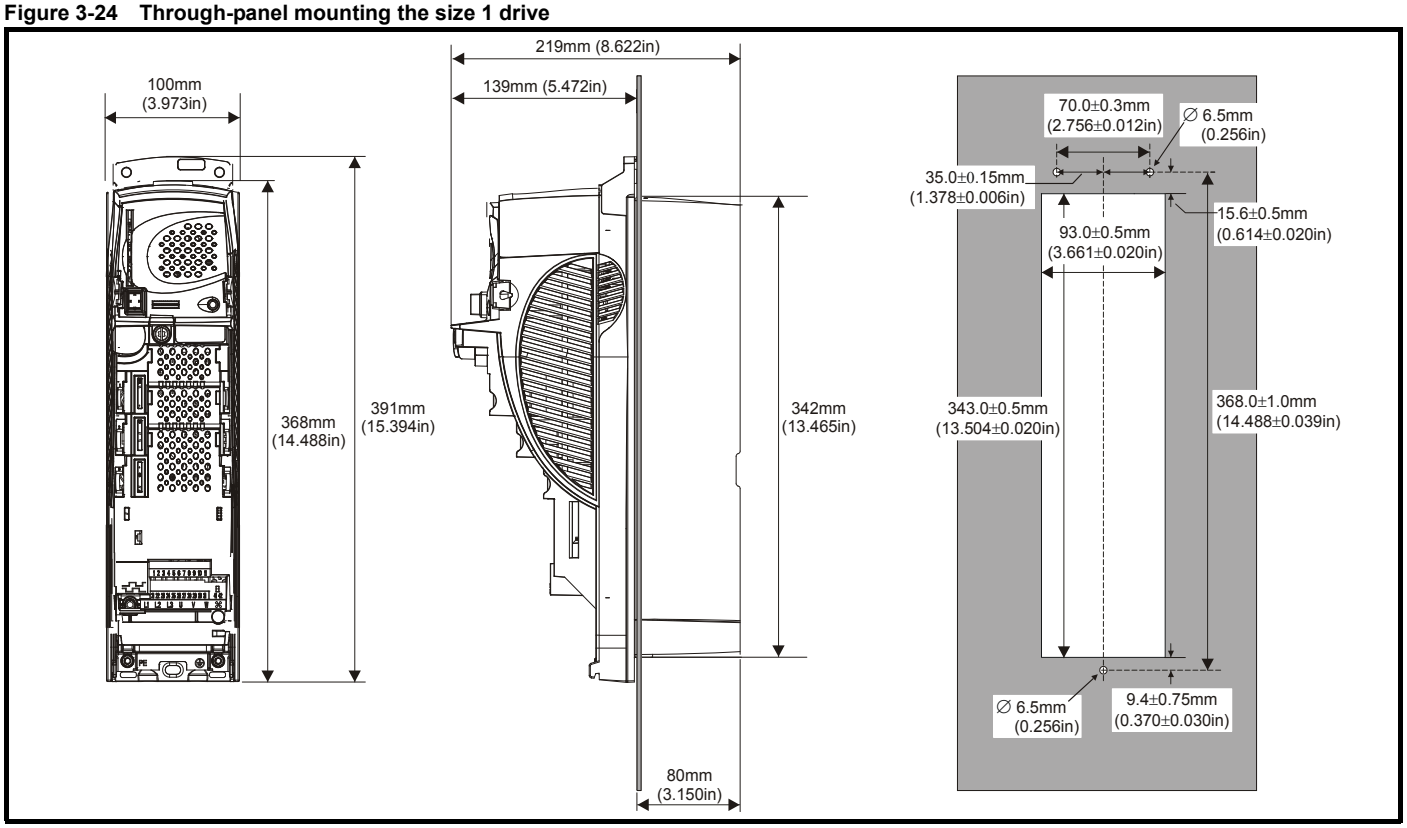

Figure 3-25 Through-panel mounting the size 2 drive

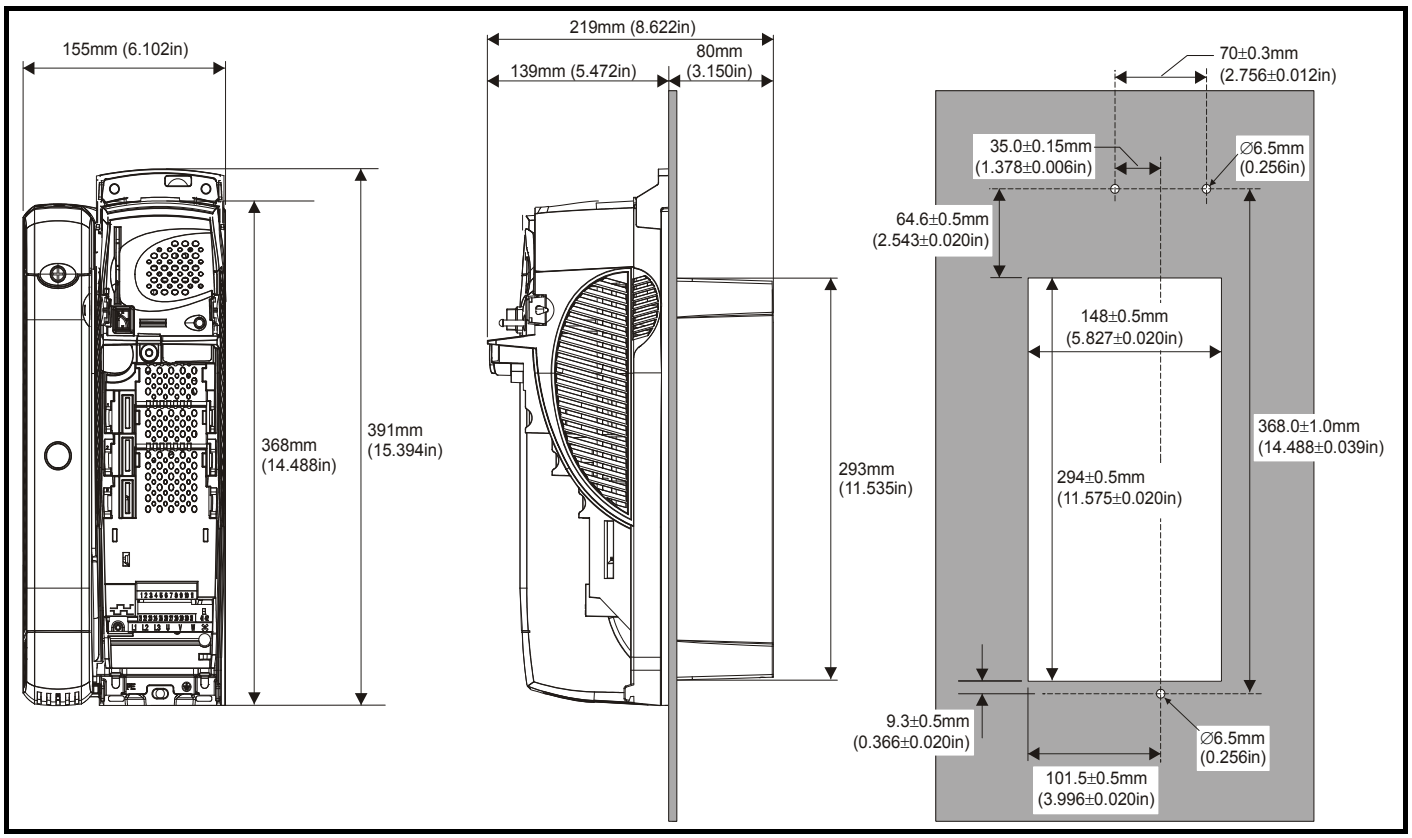

Figure 3-26 Through-panel mounting the size 3 drive

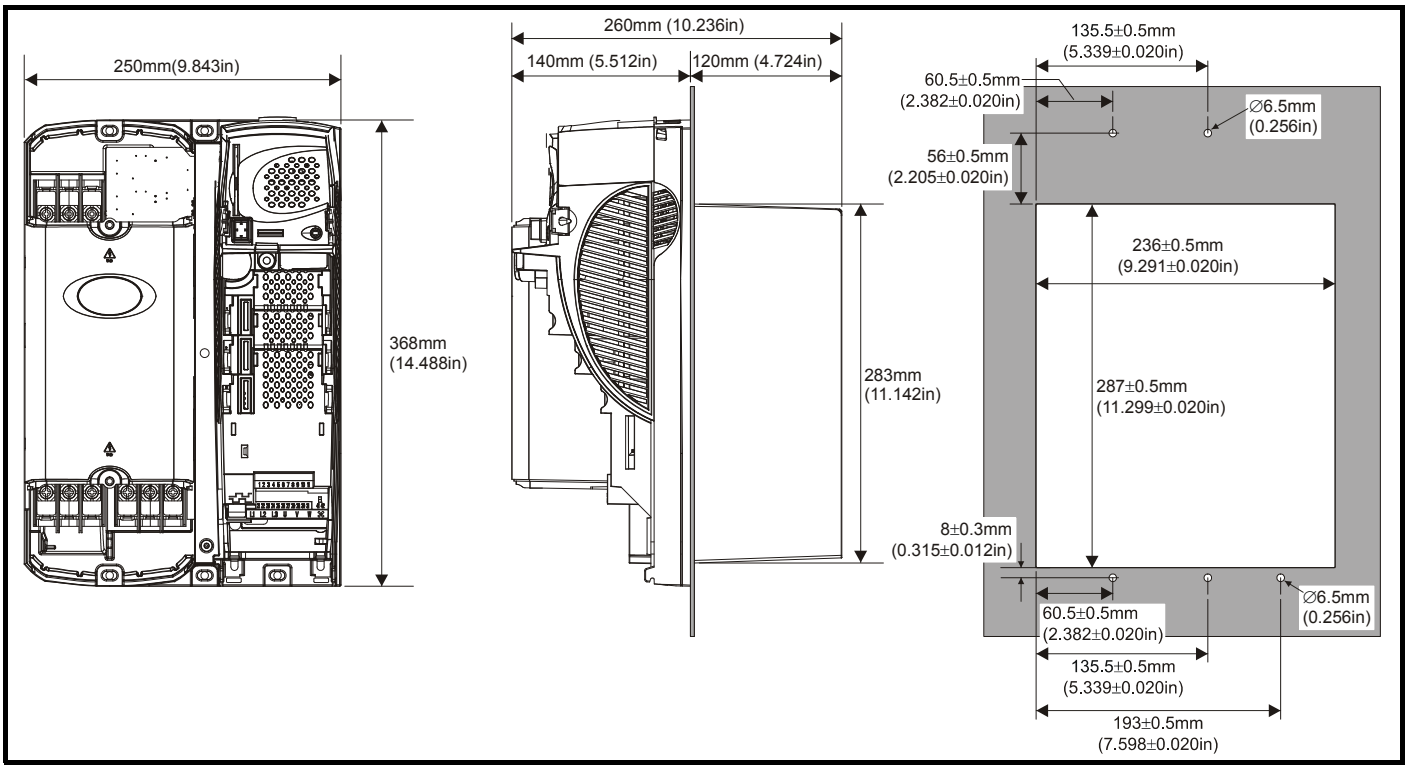

Figure 3-27 Through-panel mounting the size 4 drive

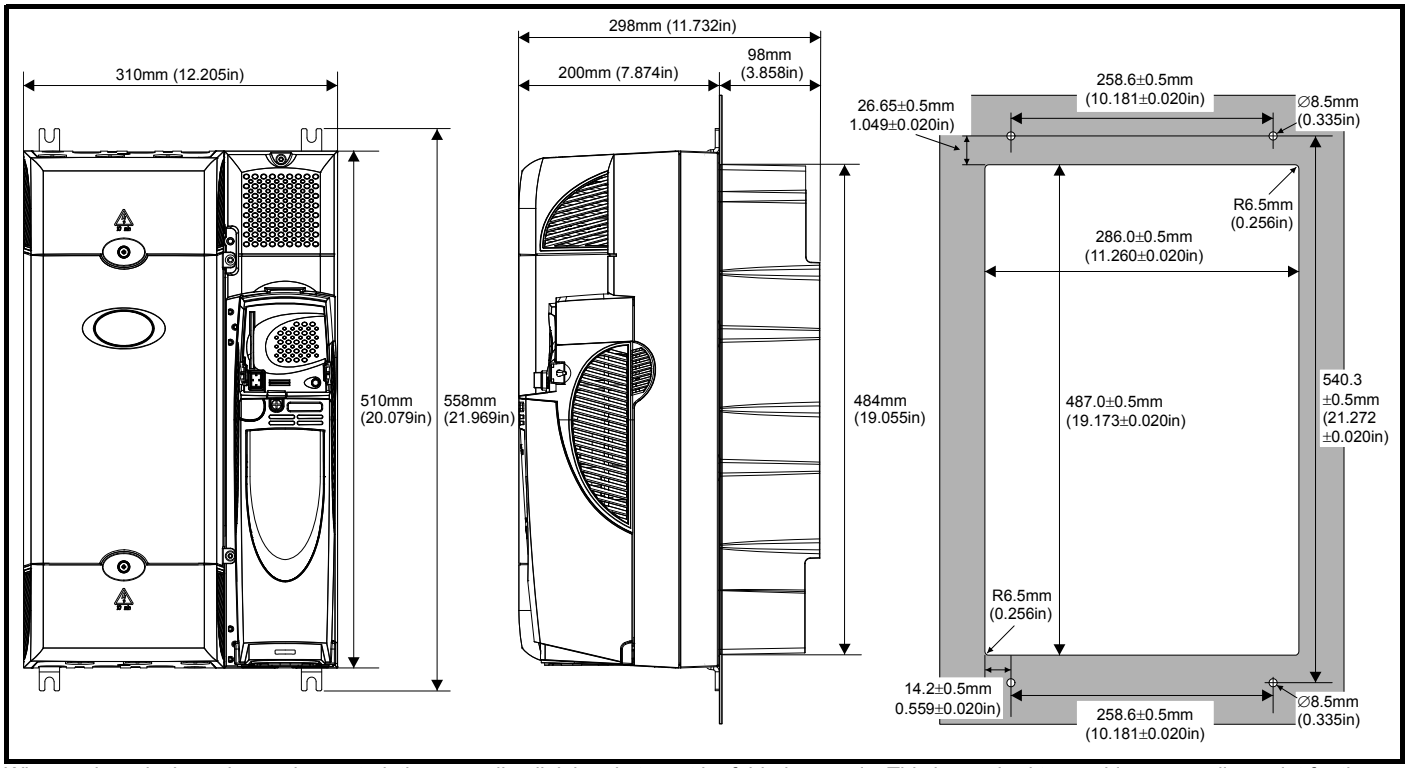

When a size 4 is through-panel mounted, the grounding link bracket must be folded upwards. This is required to provide a grounding point for the grounding bracket. See section 4.11.1 *Grounding hardware* on page 81 for more information.

Figure 3-28 Through-panel mounting the size 5 drive

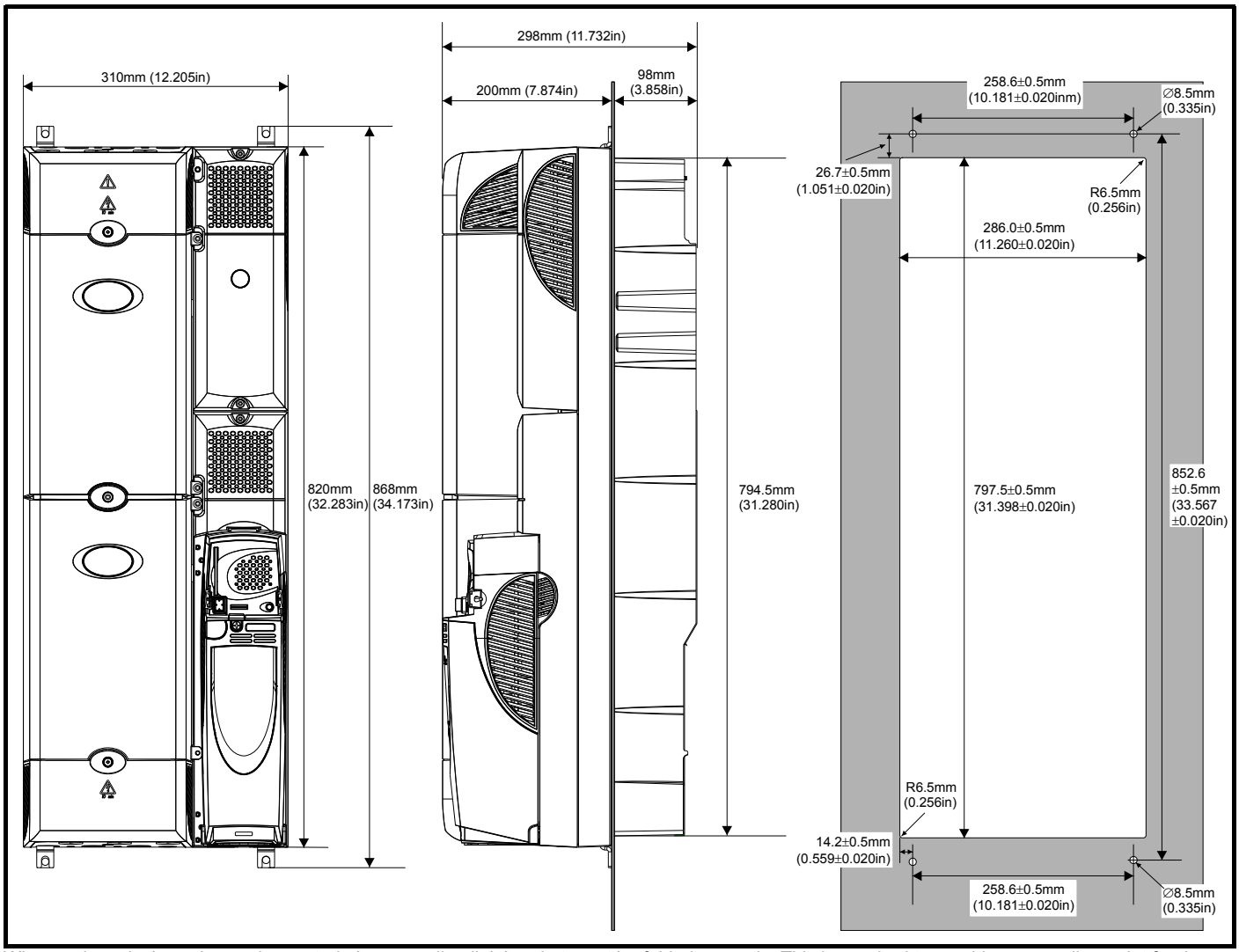

When a size 5 is through-panel mounted, the grounding link bracket must be folded upwards. This is required to provide a grounding point for the grounding bracket. See section 4.11.1 *Grounding hardware* on page 81 for more information.

Figure 3-29 Through-panel mounting the size 6 drive

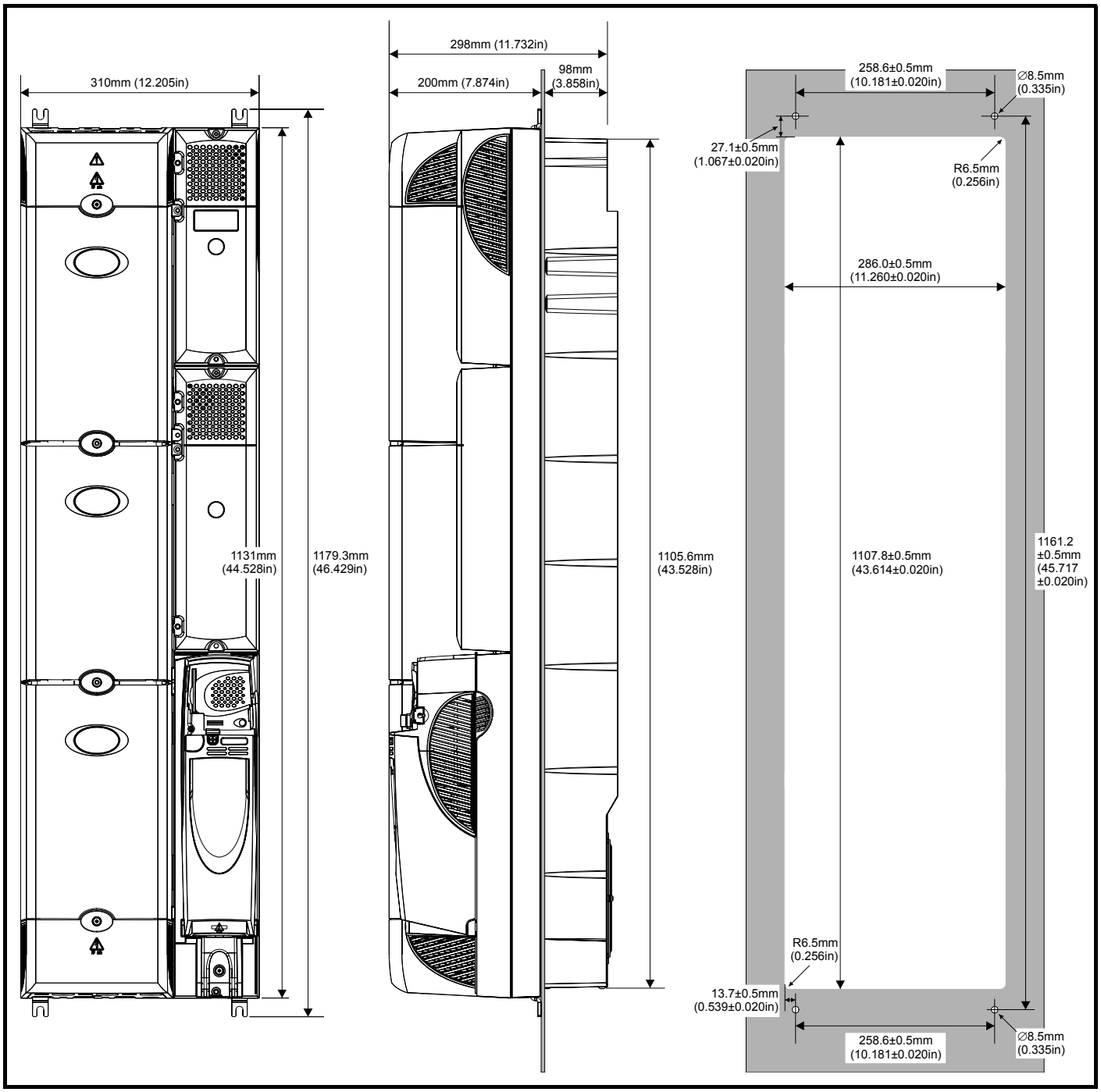

NOTE

In order to achieve IP54 rating (NEMA 12) for through-panel mounting, an IP54 insert must be installed (size 1 and 2) and the heatsink fan should be replaced with an IP54 rated fan (sizes 1 to 4). Additionally, the gasket provided should be installed between the drive and the backplate to ensure a good seal for the enclosure. If the heatsink mounted braking resistor is to be used with the drive through-panel mounted, refer to section 3.11 *Internal / heatsink mounted braking resistor* on page 60 prior to mounting the drive. For further information refer to section 3.9 *Enclosing standard drive for high environmental protection* on page 50.

3.5.4 Mounting brackets

Table 3-1 Mounting brackets

Model size	Surface	Through-panel	Hole size
1	 x2	 x1	6.5mm (0.256in)
2	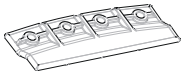 x2	 x1	
3	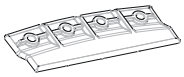 x2		
4	 x4		8.5mm (0.335in)
5 & 6	 x4		
	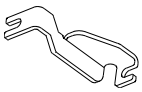 x2		

To avoid damaging the through-panel mounting bracket when through-panel mounting a size 1 or size 2, the through-panel mounting bracket should be used to mount the top of the drive to the back plate before the bottom of the drive is mounted to the back plate. The tightening torque should be 4 N m (2.9 lb ft).

3.5.5 Installation of the mounting bracket on size 4, 5 and 6

Size 4, 5 and 6 use the same mounting brackets for surface and through-panel mounting.

The mounting bracket has a long section and a short section.

Figure 3-30 Size 4, 5 and 6 mounting bracket

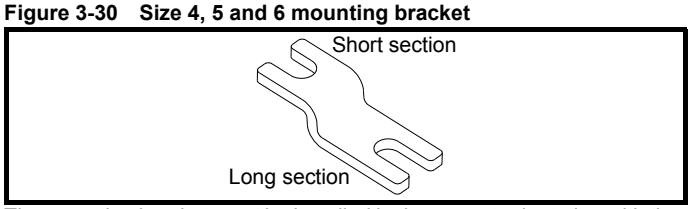

The mounting bracket must be installed in the correct orientation with the long section inserted into or attached to the drive and the short section is attached to the back plate. Figure 3-31 shows the orientation of the mounting bracket when the drive is surface and through-panel mounted.

Figure 3-31 Orientation of the size 4, 5 and 6 mounting bracket

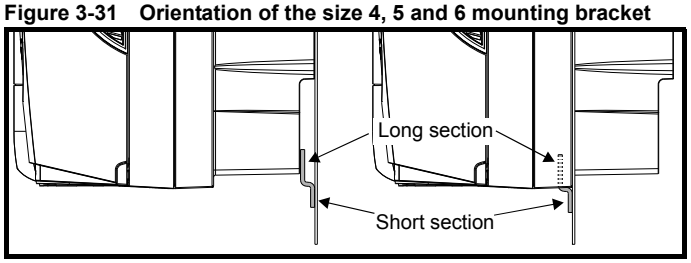

When through-panel mounted, the mounting brackets on the left hand side of the drive can be secured using the screws already located there. On the right hand side, the mounting brackets are just inserted into the slots in the chassis of the drive; no mounting screws are present here.

Size 5 and 6 also require two top mounting brackets when the drive is surface mounted. The two brackets should be installed to the top of the drive as shown in Figure 3-32.

The maximum torque setting for the screws into the drive chassis is 10 N m (7.4 lb ft).

Figure 3-32 Location of top surface mounting brackets for size 5 and 6

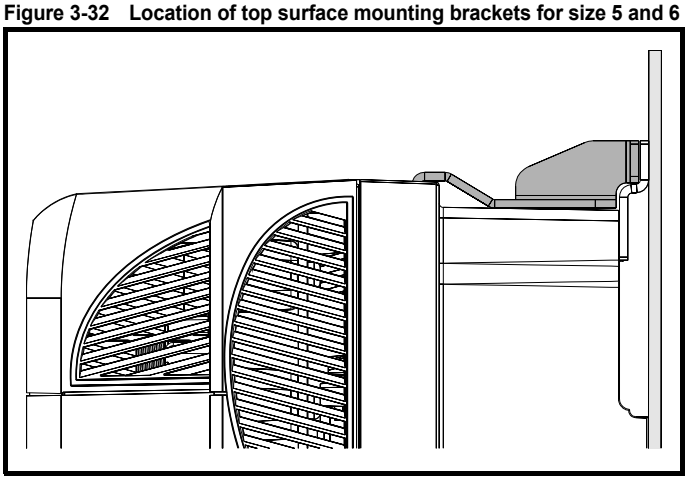

3.6 Enclosure for standard drives

3.6.1 Enclosure layout

Please observe the clearances in the diagram below taking into account any appropriate notes for other devices / auxiliary equipment when planning the installation.

Figure 3-33 Enclosure layout

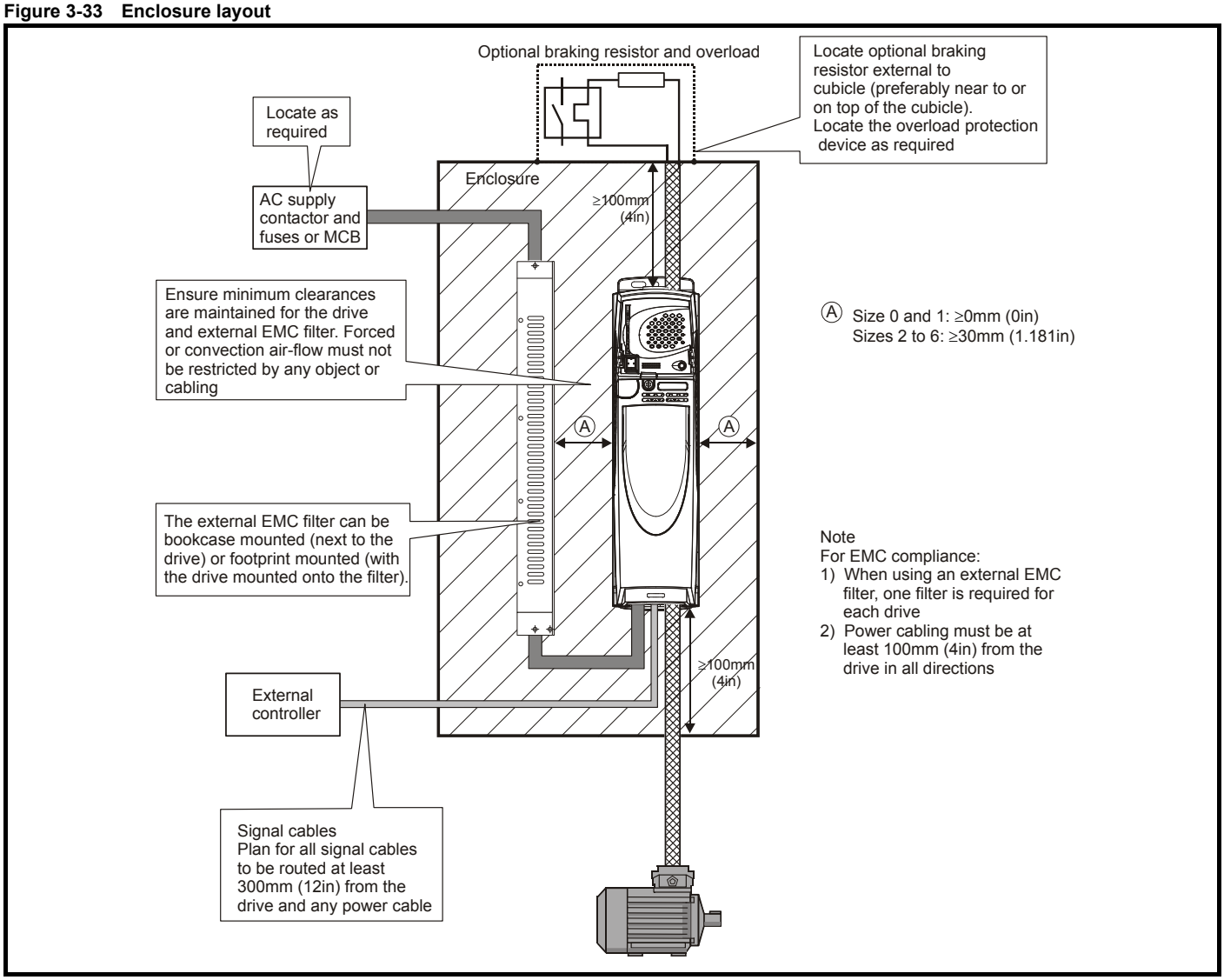

3.6.2 Enclosure sizing

1. Add the dissipation figures from section 12.1.2 *Power dissipation* on page 268 for each drive that is to be installed in the enclosure.
2. If an external EMC filter is to be used with each drive, add the dissipation figures from section 12.2.1 *EMC filter ratings* on page 280 for each external EMC filter that is to be installed in the enclosure.
3. If the braking resistor is to be mounted inside the enclosure, add the average power figures from for each braking resistor that is to be installed in the enclosure.
4. Calculate the total heat dissipation (in Watts) of any other equipment to be installed in the enclosure.
5. Add the heat dissipation figures obtained above. This gives a figure in Watts for the total heat that will be dissipated inside the enclosure.

Calculating the size of a sealed enclosure

The enclosure transfers internally generated heat into the surrounding air by natural convection (or external forced air flow); the greater the surface area of the enclosure walls, the better is the dissipation capability. Only the surfaces of the enclosure that are unobstructed (not in contact with a wall or floor) can dissipate heat.

Calculate the minimum required unobstructed surface area $\mathbf{A_e}$ for the enclosure from:

$$\mathbf{A_e} = \frac{\mathbf{P}}{\mathbf{k}(\mathbf{T_{int}} - \mathbf{T_{ext}})}$$

Where:

$\mathbf{A_e}$	Unobstructed surface area in m^2 (1 m^2 = 10.9 ft^2)
$\mathbf{T_{ext}}$	Maximum expected temperature in ^oC *outside* the enclosure
$\mathbf{T_{int}}$	Maximum permissible temperature in ^oC *inside* the enclosure
P	Power in Watts dissipated by *all* heat sources in the enclosure
k	Heat transmission coefficient of the enclosure material in $W/m^2/^oC$

Example

To calculate the size of an enclosure for the following:

- Two SP1406 models operating at the Normal Duty rating
- Each drive to operate at 6kHz PWM switching frequency
- Schaffner 16 A (4200-6119) external EMC filter for each drive
- Braking resistors are to be mounted outside the enclosure
- Maximum ambient temperature inside the enclosure: 40°C
- Maximum ambient temperature outside the enclosure: 30°C

Dissipation of each drive: 187 W (see Table 12-4 *Losses @ 40°C (104°F) ambient* on page 268)

Dissipation of each external EMC filter: 9.2 W (max) (see section 12.2.1 *EMC filter ratings* on page 280)

Total dissipation: 2 x (187 + 9.2) =392.4 W

The enclosure is to be made from painted 2 mm (0.079 in) sheet steel having a heat transmission coefficient of 5.5 W/m^2/ºC. Only the top, front, and two sides of the enclosure are free to dissipate heat.

The value of 5.5 W/m^2/ºC can generally be used with a sheet steel enclosure (exact values can be obtained by the supplier of the material). If in any doubt, allow for a greater margin in the temperature rise.

Figure 3-34 Enclosure having front, sides and top panels free to dissipate heat

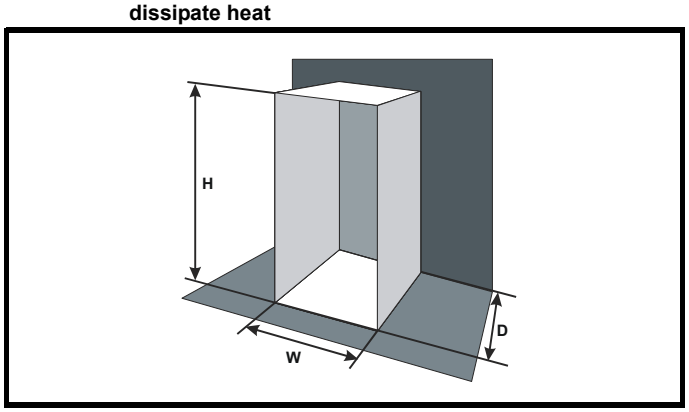

Insert the following values:

T_{int}	40°C
T_{ext}	30°C
k	5.5
P	392.4 W

The minimum required heat conducting area is then:

$$A_e = \frac{392.4}{5.5(40-30)}$$

= 7.135 m^2 (77.8 ft^2) (1 m^2 = 10.9 ft^2)

Estimate two of the enclosure dimensions - the height (H) and depth (D), for instance. Calculate the width (W) from:

$$W = \frac{A_e - 2HD}{H + D}$$

Inserting **H** = 2m and **D** = 0.6m, obtain the minimum width:

$$W = \frac{7.135 - (2 \times 2 \times 0.6)}{2 + 0.6}$$

=1.821 m (71.7 in)

If the enclosure is too large for the space available, it can be made smaller only by attending to one or all of the following:

- Using a lower PWM switching frequency to reduce the dissipation in the drives
- Reducing the ambient temperature outside the enclosure, and/or applying forced-air cooling to the outside of the enclosure
- Reducing the number of drives in the enclosure
- Removing other heat-generating equipment

Calculating the air-flow in a ventilated enclosure

The dimensions of the enclosure are required only for accommodating the equipment. The equipment is cooled by the forced air flow.

Calculate the minimum required volume of ventilating air from:

$$V = \frac{3kP}{T_{int} - T_{ext}}$$

Where:

V	Air-flow in m^3 per hour (1 m^3/hr = 0.59 ft^3/min)
T_{ext}	Maximum expected temperature in °C *outside* the enclosure
T_{int}	Maximum permissible temperature in °C *inside* the enclosure
P	Power in Watts dissipated by *all* heat sources in the enclosure
k	Ratio of $\frac{P_o}{P_I}$

Where:

P_0 is the air pressure at sea level

P_I is the air pressure at the installation

Typically use a factor of 1.2 to 1.3, to allow also for pressure-drops in dirty air-filters.

Example

To calculate the size of an enclosure for the following:

- Three SP1403 models operating at the Normal Duty rating
- Each drive to operate at 6kHz PWM switching frequency
- Schaffner 10A (4200-6118) external EMC filter for each drive
- Braking resistors are to be mounted outside the enclosure
- Maximum ambient temperature inside the enclosure: 40°C
- Maximum ambient temperature outside the enclosure: 30°C

Dissipation of each drive: 101 W

Dissipation of each external EMC filter: 6.9 W (max)

Total dissipation: 3 x (101 + 6.9) = 323.7 W

Insert the following values:

T_{int}	40°C
T_{ext}	30°C
k	1.3
P	323.7 W

Then:

$$V = \frac{3 \times 1.3 \times 323.7}{40 - 30}$$

= 126.2 m^3/hr (74.5 ft^3 /min) (1 m^3/ hr = 0.59 ft^3/min)

3.7 Enclosure design and drive ambient temperature

Drive derating is required for operation in high ambient temperatures

Totally enclosing or through panel mounting the drive in either a sealed cabinet (no airflow) or in a well ventilated cabinet makes a significant difference on drive cooling.

The chosen method affects the ambient temperature value (T_{rate}) which should be used for any necessary derating to ensure sufficient cooling for the whole of the drive.

The ambient temperature for the four different combinations is defined below:

1. Totally enclosed with no air flow (<2 m/s) over the drive
   $T_{rate} = T_{int} + 5°C$
2. Totally enclosed with air flow (>2 m/s) over the drive
   $T_{rate} = T_{int}$
3. Through panel mounted with no airflow (<2 m/s) over the drive
   T_{rate} = the greater of T_{ext} +5°C, or T_{int}
4. Through panel mounted with air flow (>2 m/s) over the drive
   T_{rate} = the greater of T_{ext} or T_{int}

Where:

T_{ext} = Temperature outside the cabinet

T_{int} = Temperature inside the cabinet

T_{rate} = Temperature used to select current rating from tables in Chapter 12 *Technical Data* on page 265.

3.8 Heatsink fan operation

The drive is ventilated by an internal heatsink mounted fan. The fan housing forms a baffle plate, channelling the air through the heatsink chamber. Thus, regardless of mounting method (surface mounting or through-panel mounting), the Installing of additional baffle plates is not required.

Ensure the minimum clearances around the drive are maintained to allow air to flow freely.

The heatsink fan on size 0 to 2 is a dual speed fan and on size 3 to 6 it is a variable speed fan. The drive controls the speed at which the fan runs based on the temperature of the heatsink and the drive's thermal model system. The size 3 to 6 is also installed with a variable speed fan to ventilate the capacitor bank.

The heatsink fan on size 0 to 5 is supplied internally by the drive. The heatsink fan on size 6 requires an external 24Vdc supply. See section 4.4 *Heatsink fan supply* on page 72 for more information.

3.9 Enclosing standard drive for high environmental protection

An explanation of environmental protection rating is provided in section 12.1.9 *IP / UL Rating* on page 271.

The standard drive is rated to IP20 pollution degree 2 (dry, non-conductive contamination only) (NEMA 1). However, it is possible to configure the drive to achieve IP54 rating (UL Type 12 / NEMA 12) at the rear of the heatsink for through-panel mounting (some current derating is required for size 1 and 2). Refer to Table 12-2 on page 266.

This allows the front of the drive, along with various switchgear, to be housed in an IP54 (UL Type 12 / NEMA 12) enclosure with the heatsink protruding through the panel to the external environment. Thus, the majority of the heat generated by the drive is dissipated outside the enclosure maintaining a reduced temperature inside the enclosure. This also relies on a good seal being made between the heatsink and the rear of the enclosure using the gaskets provided.

For Type 12 the drive must be mounted on a flat surface of a Type 12 enclosure.

Figure 3-35 Example of IP54 (UL Type 12 / NEMA 12) through-panel layout

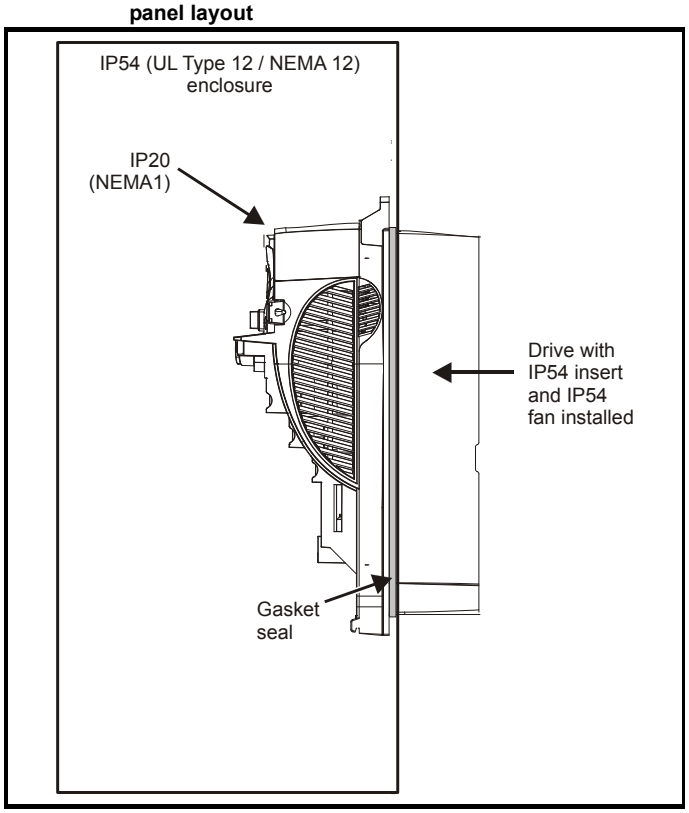

The main gasket should be installed as shown in Figure 3-36. Any screws / bolts that are used for mounting should be installed with the nylon washers provided in the kit box to maintain a seal around the screw hole. See Figure 3-39.

In order to achieve the high IP rating at the rear of the heatsink with size 1 and 2, it is necessary to seal a heatsink vent by installing the IP54 insert as shown in Figure 3-37 and Figure 3-38.

Figure 3-36 Installing the gasket

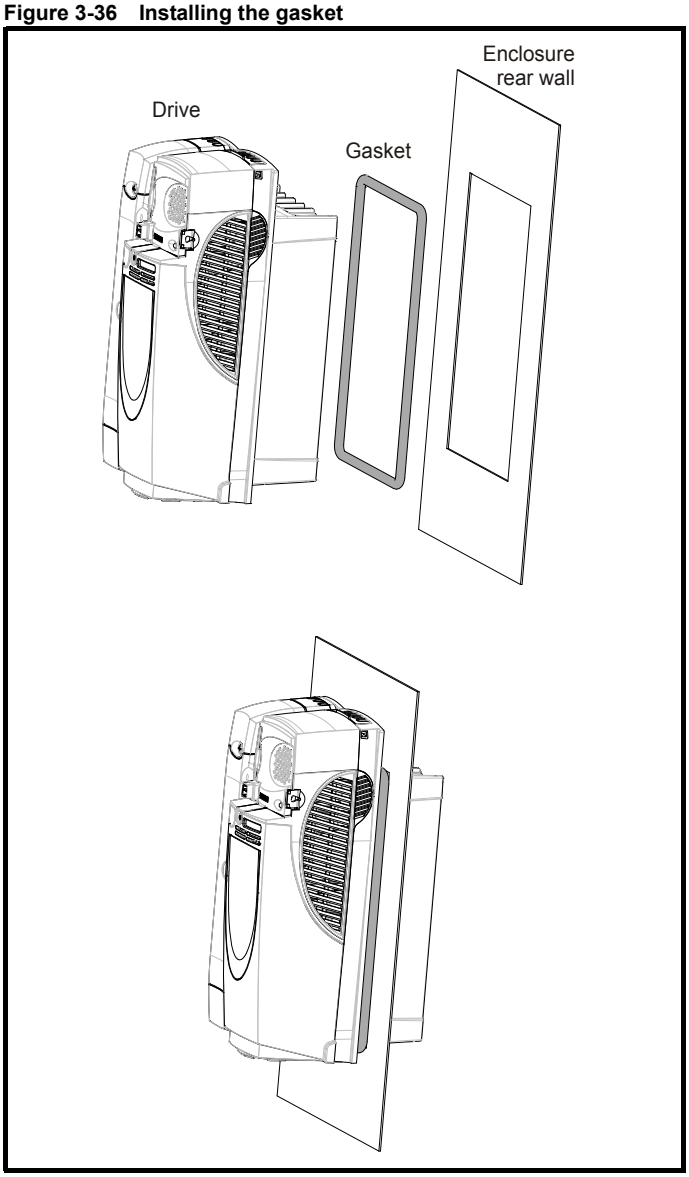

Figure 3-37 Installation of IP54 insert for size 1

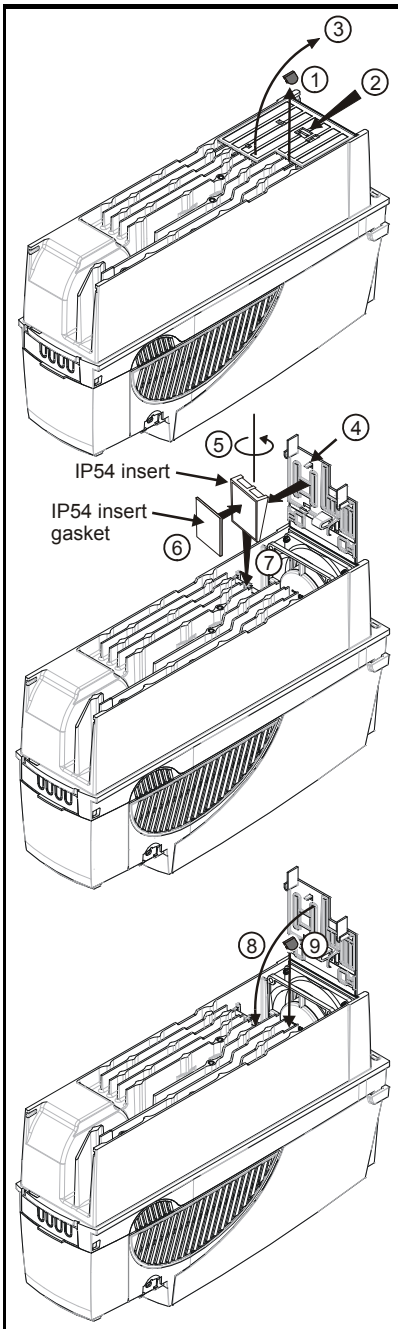

In order to remove the IP54 insert, repeat steps (1), (2) and (3), reverse steps (7), (6), (5) and (4) and repeat steps (8) and (9).

Figure 3-38 Installation of IP54 insert for size 2

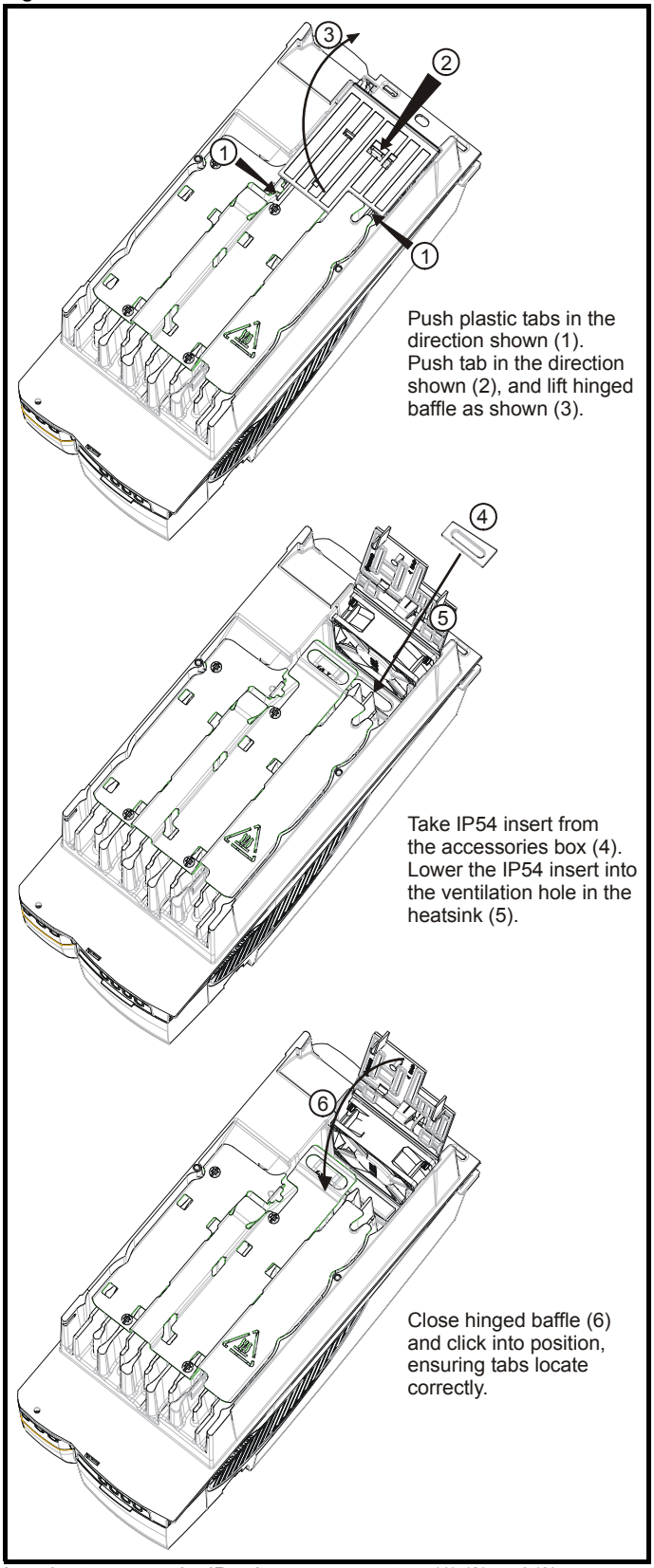

In order to remove the IP54 insert, repeat steps (1) (2) and (3), reverse steps (5) and (4) and repeat step (6).

For sizes 4 to 6 it may be necessary to improve the rigidity of the through panel mounting surface due to the larger distance between the top and bottom mounting brackets and the need to maintain compression on the gasket.

When the drive is mounted, if the gap between the drive flange (which the gasket rests on) and the rear wall of the enclosure is ≥6mm at any point around the drive, then the following options can be used to compress the gasket further.

Option 1
Use a thicker panel for the mounting wall of the enclosure through which the drive is mounted.

Option 2 (See Figure 3-39)
Use an internal backplate to pull the rear wall of the enclosure up to the drive gasket. Nylon washers are supplied in the standard drive kit for sealing off any nut and bolt fixings that exit through the rear wall of the panel.

Option 3 (See Figure 3-40)
If an internal backplate is not available a separate clamp can be used to simulate option 2. Four off sealing clamps are supplied in the drive kit box.

Figure 3-39 Option 2 for achieving IP54 (UL type 12 / NEMA 12) through-panel mounting

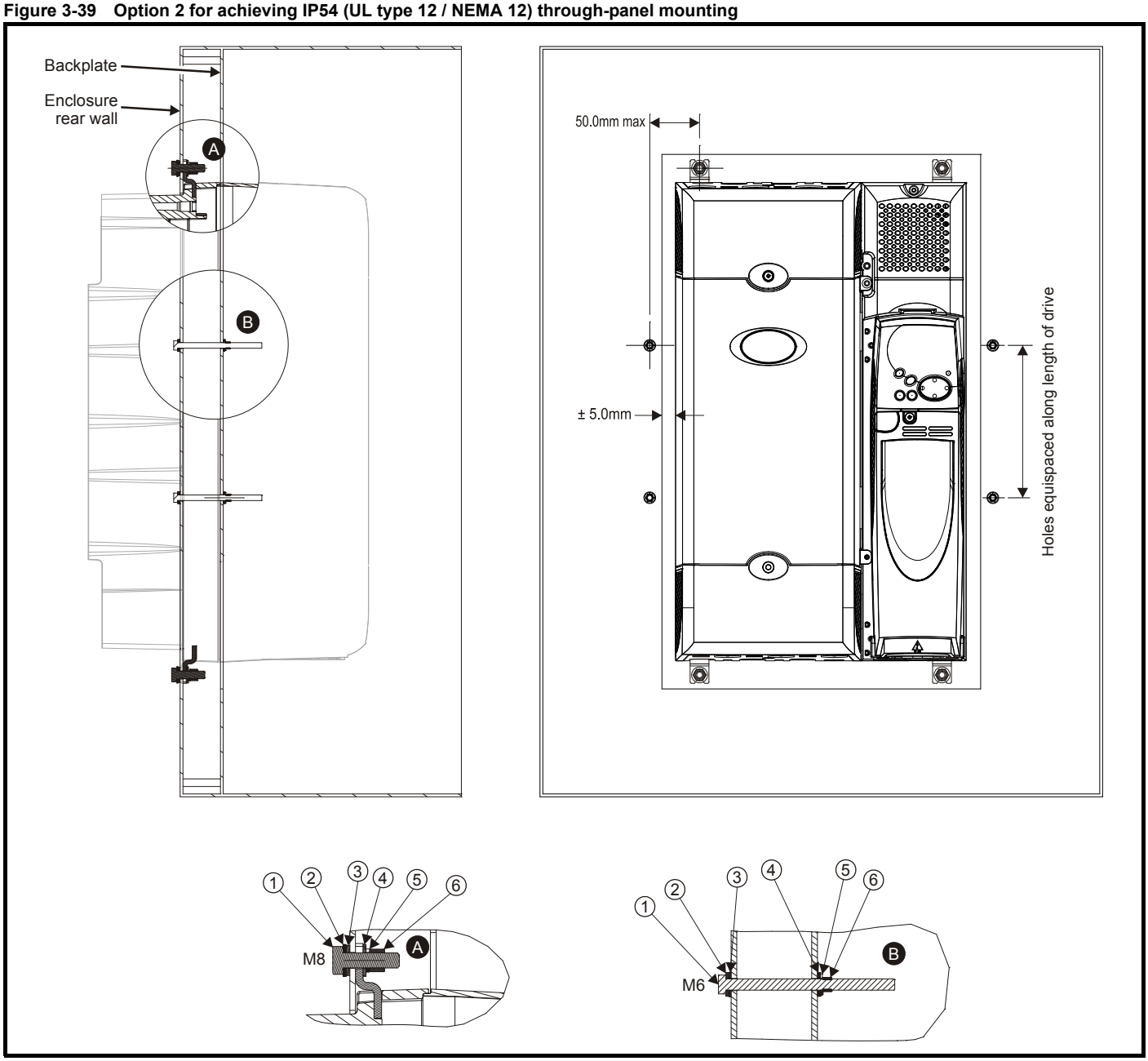

Table 3-2 Description of fixings

Item	Description
1	Bolt
2	Flat washer
3	Nylon washer (from kitbox)
4	Flat washer
5	Spring washer
6	Nut

Table 3-3 Quantity of nylon washers supplied with the drive

Size	Quantity of M8 (A)	Quantity of M6 (B)
1	0	3
2	0	3
3	0	4
4	4	4
5	4	4
6	4	4

Figure 3-40 Option 3 for achieving IP54 (UL type 12 / NEMA 12) through panel mounting

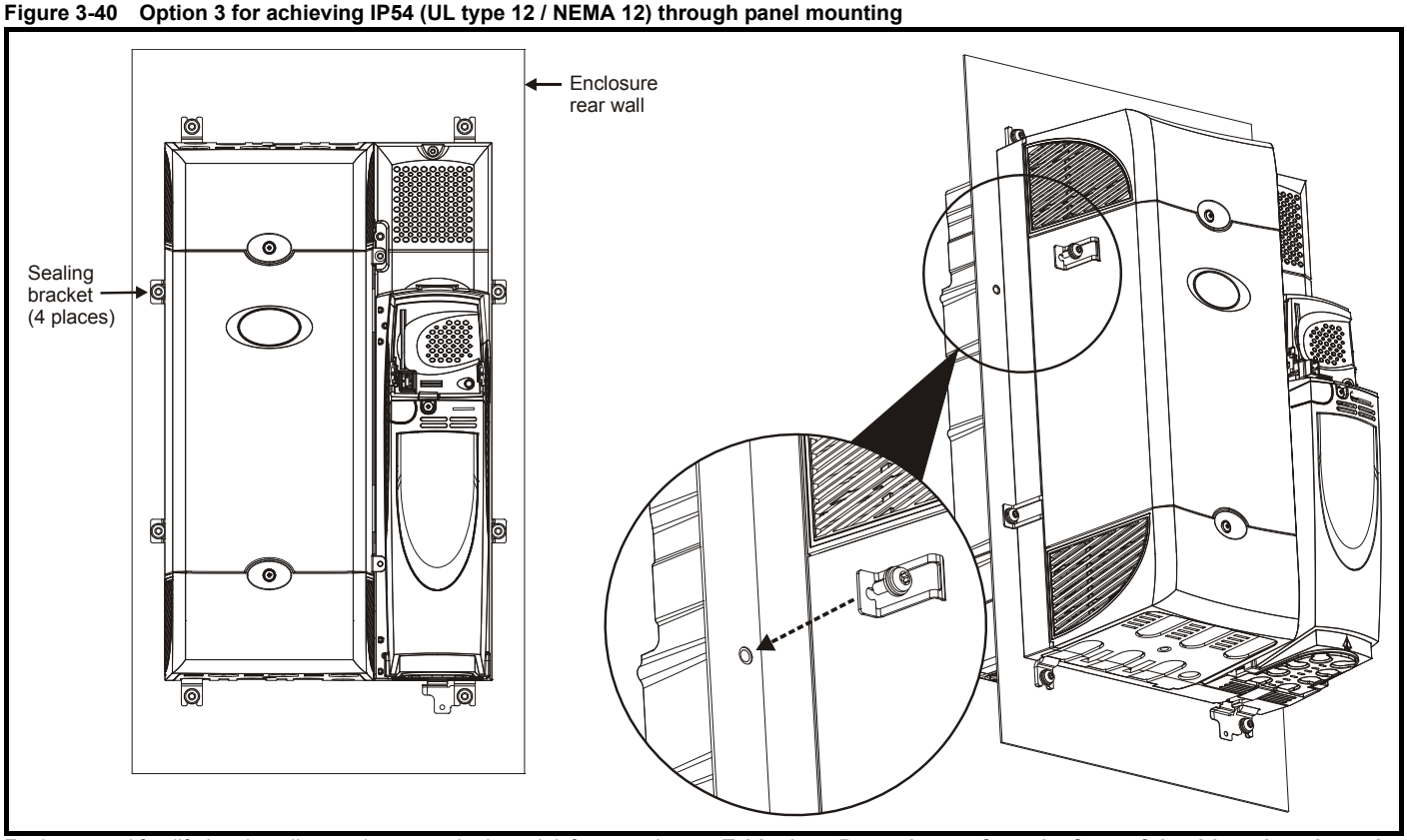

For increased fan lifetime in a dirty environment the heatsink fan must be replaced with an IP54 rated fan. Contact the supplier of the drive for details. If the standard fan is used in a dirty/dusty environment, reduced fan lifetime will result. Regular cleaning of the fan and heatsink is recommended in this environment. The heatsink fan installed in sizes 5 and 6 are IP54 rated as standard.

The guidelines in Table 3-4 should be followed.

Table 3-4 Environment considerations

Environment	IP54 Insert	Fan	Comments
Clean	Not installed	Standard	
Dry, dusty (non-conductive)	Installed	Standard	Regular cleaning recommended. Fan lifetime may be reduced.
Dry, dusty (conductive)	Installed	Standard / IP54	Regular cleaning recommended. Fan lifetime may be reduced.
IP54 compliance	Installed	IP54	Regular cleaning recommended.

NOTE

A current derating must be applied to the size 1 and 2 if the IP54 insert and/or IP54 rated fan are installed. Derating information is provided in section 12.1.1 *Power and current ratings (Derating for switching frequency and temperature)* on page 265.

Failure to do so may result in nuisance tripping.

NOTE

When designing an IP54 (NEMA 12) enclosure (Figure 3-35), consideration should be made to the dissipation from the front of the drive.

Table 3-5 Power losses from the front of the drive when through-panel mounted

Frame size	Power loss
1	≤50W
2	≤75W
3	≤100W
4	≤204W
5	≤347W
6	≤480W

3.10 External EMC filter

In order to provide our customers with a degree of flexibility, external EMC filters have been sourced from two manufacturers: Schaffner & Epcos. Filter details for each drive rating are provided in the tables below. Both the Schaffner and Epcos filters meet the same specifications.

Table 3-6 Drive EMC filter details (size 0 to 6)

Drive	Schaffner		Epcos	
	CT part no.	Weight	CT part no.	Weight
1 phase				
SP0201 to SP0205	4200-6000	1.2 kg (2.64 lb)		
3 phase				
SP0201 to SP0205	4200-6001	1.2 kg (2.64 lb)		
SP0401 to SP0405	4200-6002	1.2 kg (2.64 lb)		
SP1201 to SP1202	4200-6118	1.4 kg (3.1 lb)	4200-6121	2.1 kg (4.6 lb)
SP1203 to SP1204	4200-6119		4200-6120	
SP1401 to SP1404	4200-6118	1.4 kg (3.1 lb)	4200-6121	2.1 kg (4.6 lb)
SP1405 to SP1406	4200-6119		4200-6120	
SP2201 to SP2203	4200-6210	2.0 kg (4.4 lb)	4200-6211	3.3 kg (7.3 lb)
SP2401 to SP2404	4200-6210	2.0 kg (4.4 lb)	4200-6211	3.3 kg (7.3 lb)
SP3201 to SP3202	4200-6307	3.5 kg (7.7 lb)	4200-6306	5.1 kg (11.2 lb)
SP4201 to SP4203	4200-6406	4.0 kg (8.8 lb)	4200-6405	7.8 kg (17.2 lb)
SP5201 to SP5202	4200-6503	6.8 kg (15.0 lb)	4200-6501	12.0 kg (26.5 lb)
SP3401 to SP3403	4200-6305	3.5 kg (7.7 lb)	4200-6306	5.1 kg (11.2 lb)
SP3501 to SP3507	4200-6309		4200-6308	
SP4401 to SP4403	4200-6406	4.0 kg (8.8 lb)	4200-6405	7.8 kg (17.2 lb)
SP4601 to SP4606	4200-6408	3.8 kg (8.4 lb)	4200-6407	8.0 kg (17.6 lb)
SP5401 to SP5402	4200-6503	6.8 kg (15.0 lb)	4200-6501	12.0 kg (26.5 lb)
SP5601 to SP5602	4200-6504	4.4 kg (9.7 lb)	4200-6502	10.0 kg (22.0 lb)
SP6401 to SP6402	4200-6603	5.25 kg (11.6 lb)	4200-6601	8.6 kg (19.0 lb)
SP6601 to SP6602	4200-6604		4200-6602	

The external EMC filters for sizes 0 to 3 can be footprint or bookcase mounted, see Figure 3-41 and Figure 3-42. The external EMC filters for sizes 4 to 6 are designed to be mounted above the drive, as shown in Figure 3-43.

Mount the external EMC filter following the guidelines in section 4.11.5 *Compliance with generic emission standards* on page 87.

Figure 3-41 Footprint mounting the EMC filter

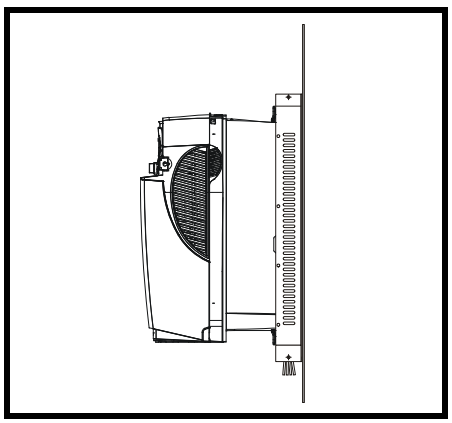

Figure 3-42 Bookcase mounting the EMC filter

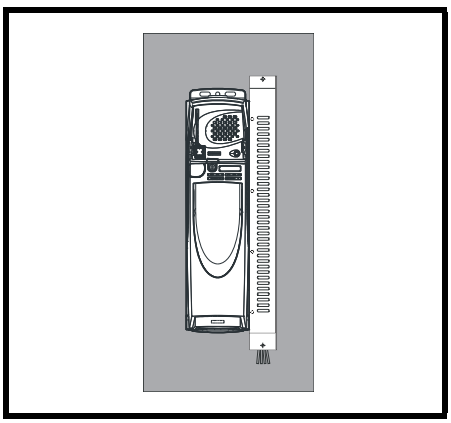

Figure 3-43 Size 4 to 6 mounting of EMC filter

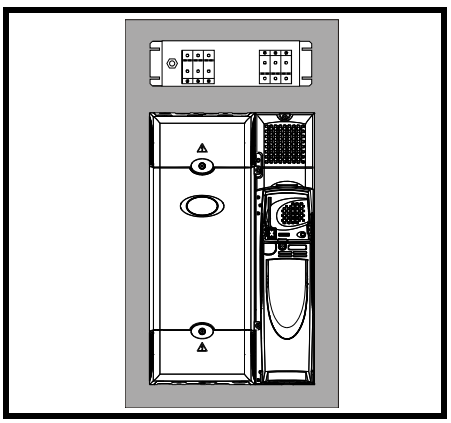

Figure 3-44 Size 0 external EMC filter

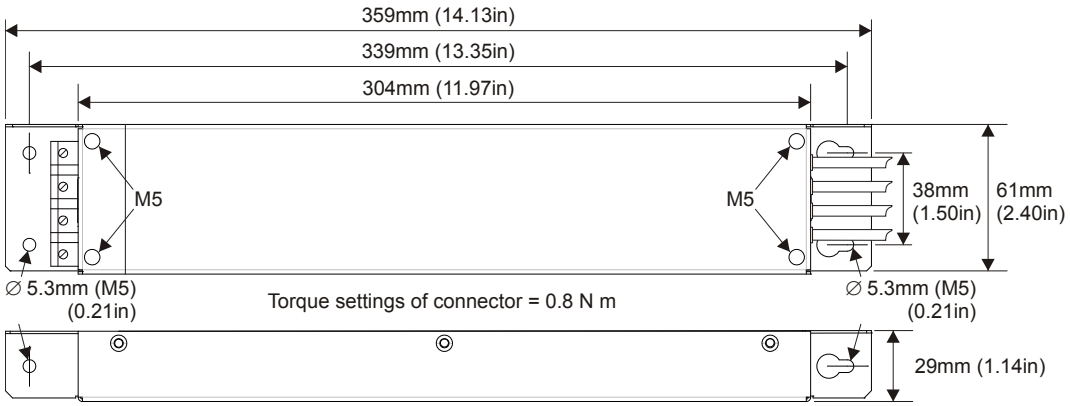

Figure 3-45 Size 1 external EMC filter

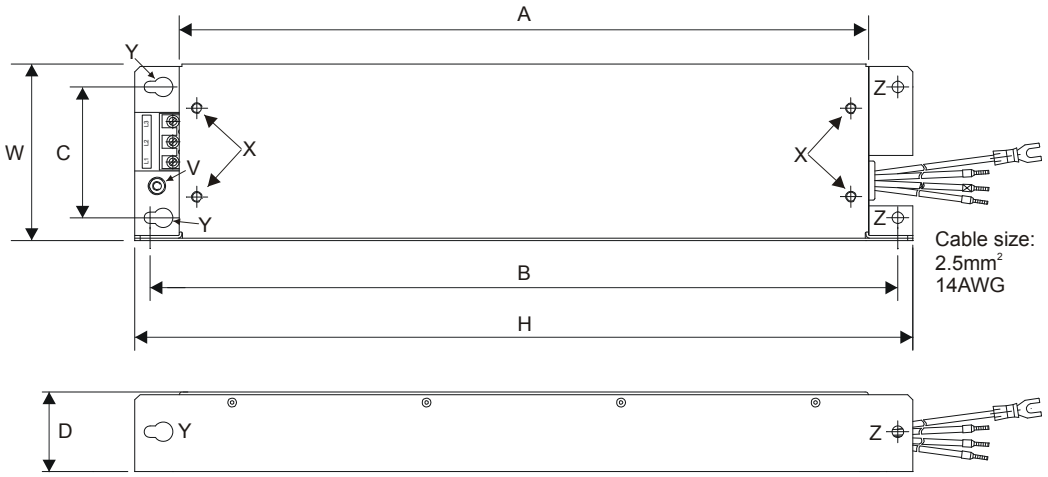

All filter mounting holes are suitable for M6 fasteners.

CT part no.	Manufacturer	A	B	C	D	H	W
4200-6118	Schaffner	390 mm (15.354 in)	423 mm (16.654 in)	74 mm (2.913 in)	45 mm (1.772 in)	440 mm (17.323 in)	100 mm (3.937 in)
4200-6119							
4200-6121	Epcos					450 mm (17.717 in)	
4200-6120							

Figure 3-46 Size 2 external EMC filter

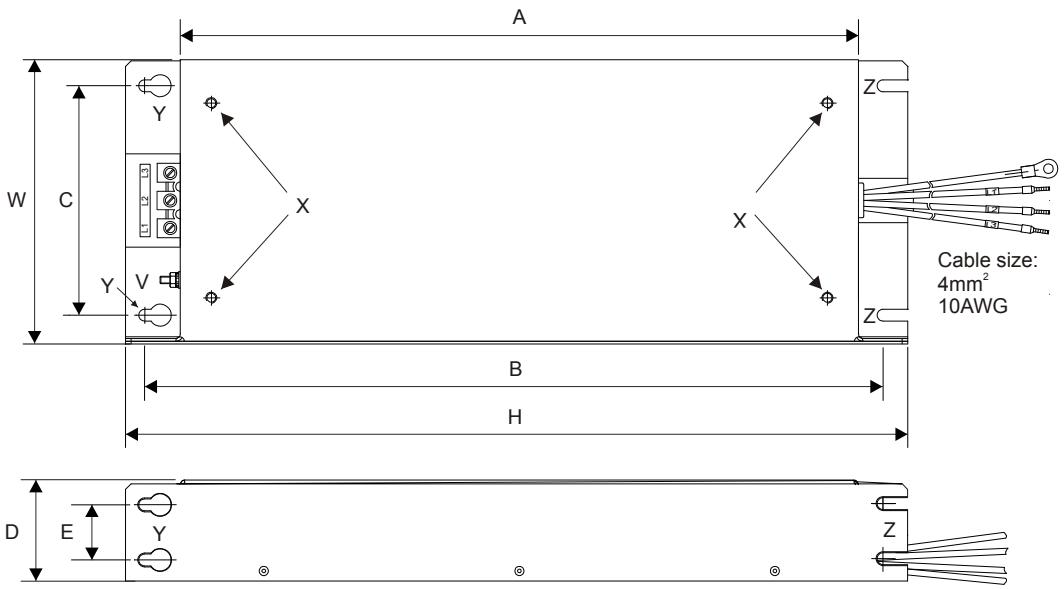

All filter mounting holes are suitable for M6 fasteners.

CT part no.	Manufacturer	A	B	C	D	E	H	W
4200-6210	Schaffner	371.5 mm (14.626 in)	404.5 mm (15.925 in)	125 mm (4.921 in)	55 mm (2.165 in)	30 mm (1.181 in)	428.5 mm (16.870 in)	155 mm (6.102 in)
4200-6211	Epcos						431.5 mm (16.988 in)	

Figure 3-47 Size 3 external EMC filter

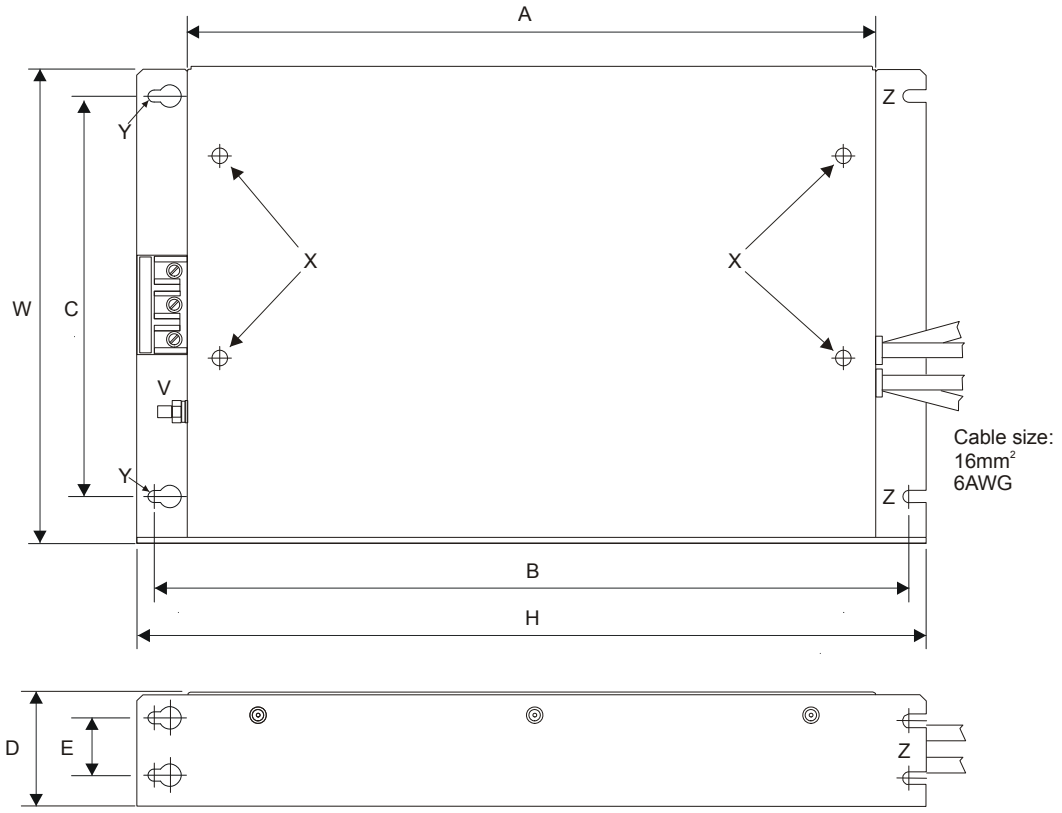

CT part no.	Manufacturer	A	B	C	D	E	H	W
4200-6305	Schaffner	361 mm (14.213 in)	396 mm (15.591 in)	210 mm (8.268 in)	60 mm (2.362 in)	30 mm (1.181 in)	414 mm (16.299 in)	250 mm (9.843 in)
4200-6307								
4200-6309								
4200-6306	Epcos	365 mm (14.370 in)					425 mm (16.732 in)	
4200-6308								

Figure 3-48 Size 4 and 5 external EMC filter

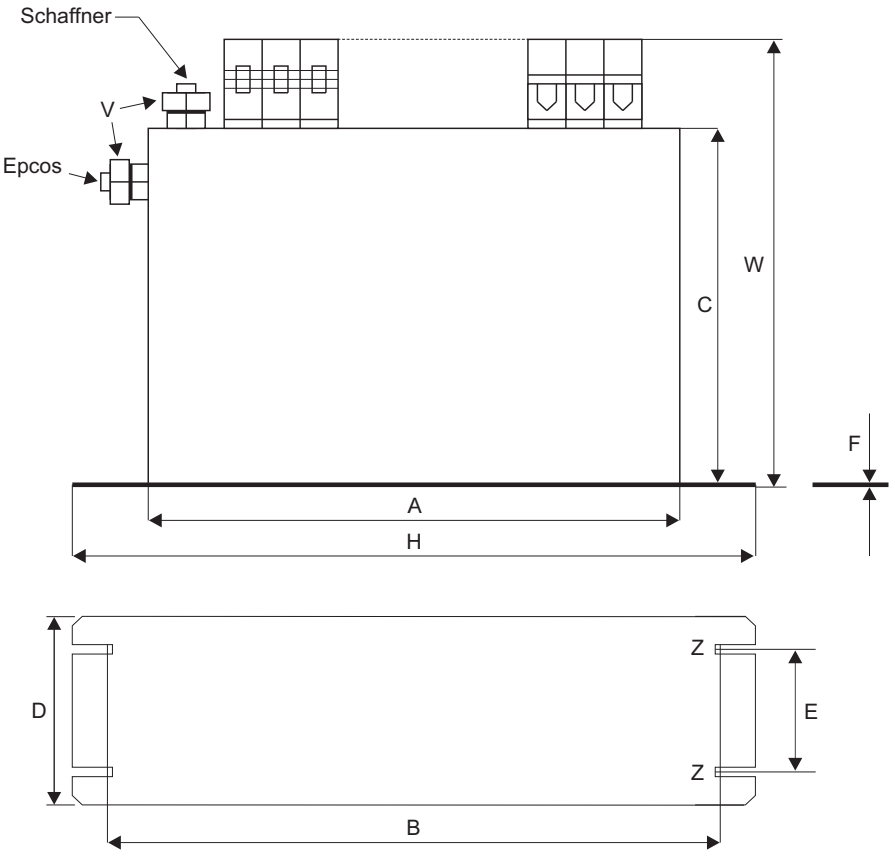

V: Ground stud: M10
Z: Bookcase mounting slots 6.5mm (0.256in wide)

CT part no.	Manufacturer	A	B	C	D	E	F	H	W
4200-6406	Schaffner	260 mm (10.236 in)	275 mm (10.827 in)	170 mm (6.693 in)	100 mm (3.937 in)	65 mm (2.559 in)	1.5 mm (0.059in)	300 mm (11.811 in)	225 mm (8.858 in)
4200-6408									208 mm (8.189 in)
4200-6503					120 mm (4.724 in)	85 mm (3.346 in)			249 mm (9.803 in)
4200-6504					100 mm (3.937 in)	65 mm (2.559 in)			225 mm (8.858 in)
4200-6405	Epcos			150 mm (5.906 in)	90 mm (3.543in)	65 mm (2.559 in)	2 mm (0.079 in)		207 mm (8.150 in)
4200-6407									205 mm (8.071 in)
4200-6501				170 mm (6.693 in)	120 mm (4.724 in)	85 mm (3.346 in)	1 mm (0.039 in)		249 mm (9.803 in)
4200-6502									

Figure 3-49 Size 6 external EMC filter

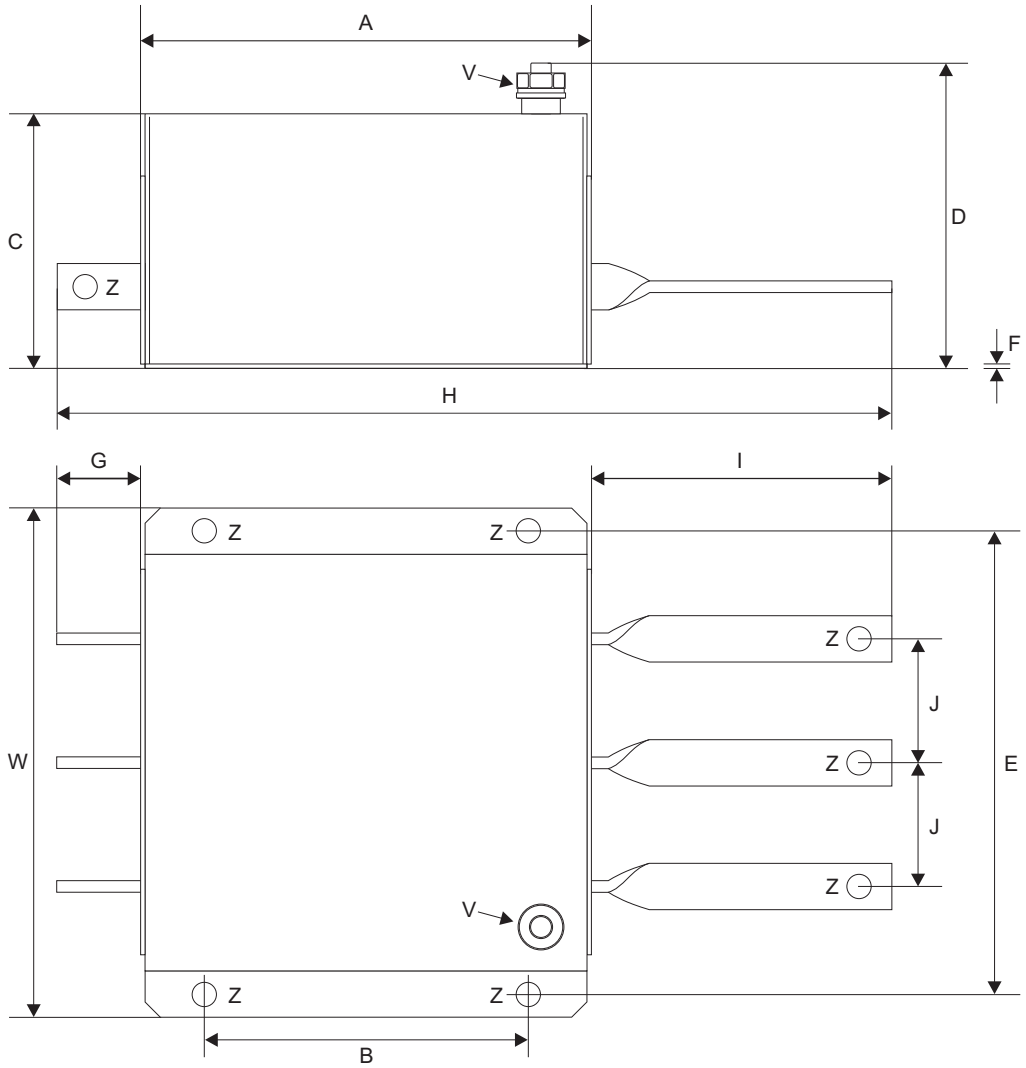

V: Ground stud: M10
Z: Hole size: ∅10.5mm

CT part no.	Manufacturer	A	B	C	D	E	F	G	H	I	J	W
4200-6603	Schaffner	191 mm (7.717 in)	140 mm (5.512 in)	110 mm (4.331 in)	136 mm (5.354 in)	210 mm (8.268 in)	2 mm (0.079in)	38 mm (1.496 in)	295 mm (11.614 in)	66 mm (2.958 in)	53.5 mm (2.106 in)	230 mm (9.055 in)
4200-6604									357 mm (14.055 in)	128 mm (5.039 in)		
4200-6601	Epcos	200 mm (7.874 in)		108 mm (4.252 in)	147 mm (5.787 in)			36.5 mm (1.437 in)	364 mm (14.331 in)	127 mm (5.000 in)		
4200-6602												

3.11 Internal / heatsink mounted braking resistor

WARNING

The internal / heatsink mounted braking resistors must only be used with the following drives:

Resistor 1299-0001-00 must only be used with size 0 drives

Resistor 1220-2756-01 must only be used with size 1 drives

Resistor 1220-2758-01 must only be used with size 2 drives

3.11.1 Size 0 internal braking resistor

The size 0 has been designed to accommodate an optional internal resistor. When the internal resistor is used, an external thermal protection device is not required as the resistor is designed such that it will fail safely under fault conditions. The in-built software overload protection is set up at default to protect the resistor. The part number for the brake resistor assembly is 1299-0001-00.

Figure 3-50 Installing an optional internal braking resistor (top view of drive)

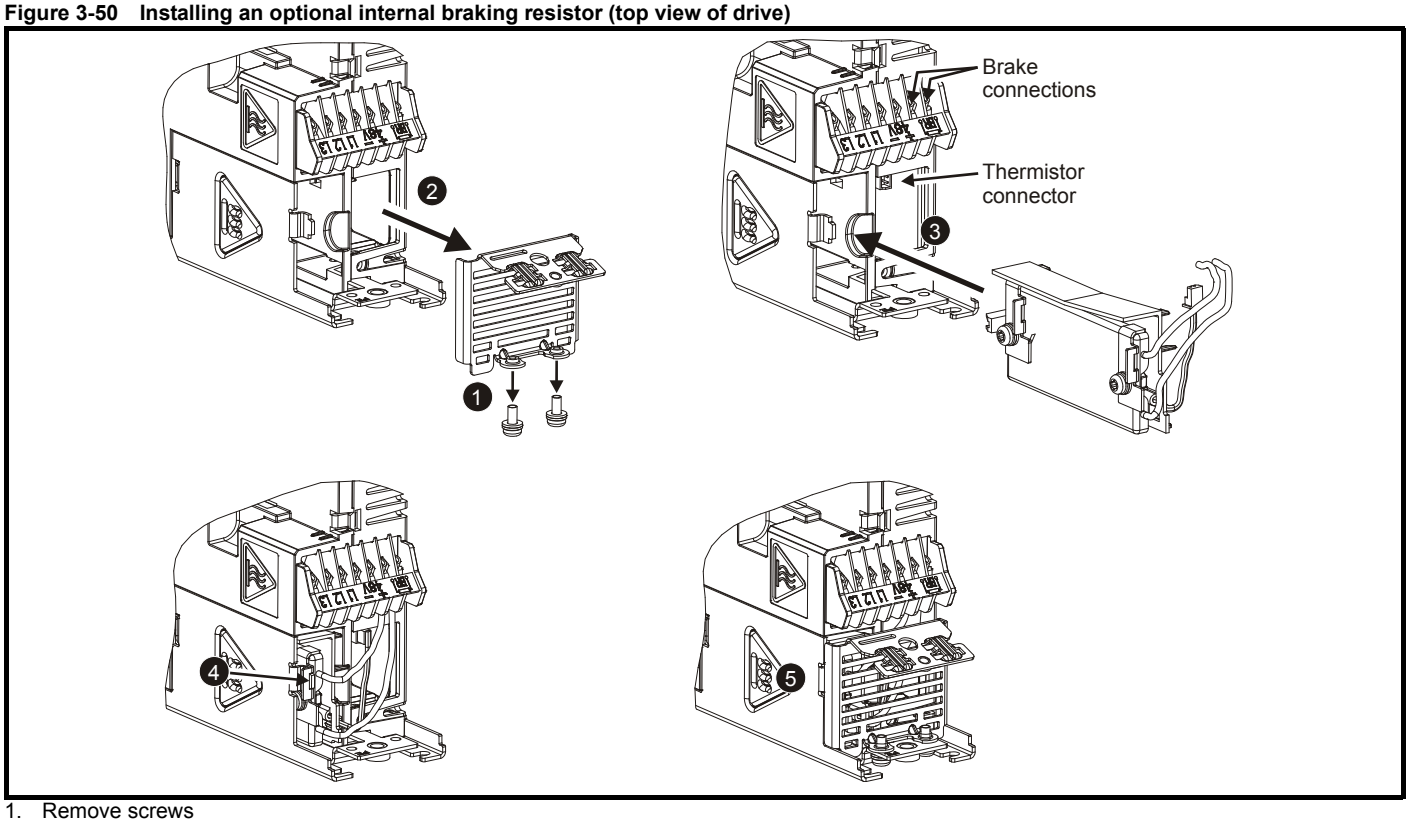

1. Remove screws
2. Remove grill
3. Fit the optional internal braking resistor in the slot provided and electrically connect the braking resistor (connections shown in Figure 4-1 on page 67). Ensure that the braking resistor thermistor is connected to the drive
4. Locate the braking resistor onto the drive tab
5. Refit the grill and mounting screws by reversing the procedure in points 1 and 2

3.11.2 Size 1 and 2 heatsink mounted braking resistor

WARNING

If the drive has been used at high load levels for a period of time, the heatsink and heatsink mounted braking resistor can reach temperatures in excess of 70°C (158°F). Human contact with the heatsink and heatsink mounted braking resistor should be prevented.

WARNING

To avoid the risk of fire when the drive is surface mounted with the braking resistor installed, the back plate should be a non-flammable material.

The size 1and 2 have been designed with an optional space-saving heatsink mounted resistor. The resistor can be installed within the heatsink fins of the drive. When the heatsink mounted resistor is used, an external thermal protection device is not required as the resistor is designed such that it will fail safely under fault conditions. The in-built software overload protection is set up at default to protect the resistor. The resistor is rated to IP54 (NEMA12).

If the drive is to be through-panel mounted with the heatsink mounted brake resistor installed, then the aperture in the panel through which the drive is mounted must be modified as shown in Figure 3-51 and Figure 3-52. This is in order to allow for the braking resistor cables and grommets.

Figure 3-51 Through-panel mounting cut-out details for size 1

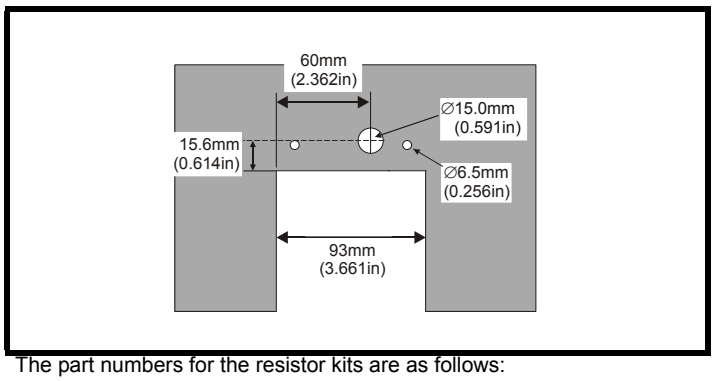

Figure 3-52 Through-panel mounting cut-out details for size 2

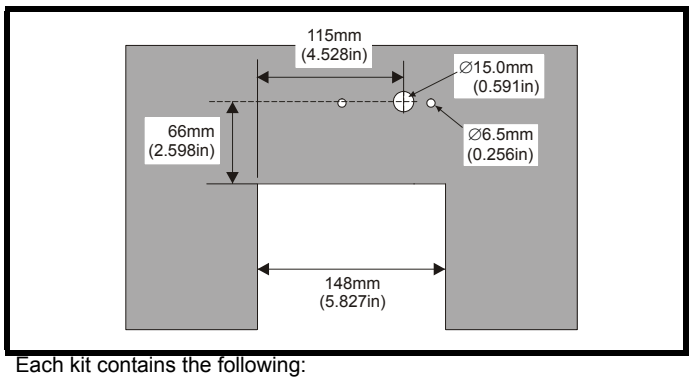

The part numbers for the resistor kits are as follows:

Size 1: 1220-2756-01

Size 2: 1220-2758-01

Each kit contains the following:

- A braking resistor assembly
- A through-panel grommet
- An installation sheet
- A wire clip (Size 2 only)

3.11.3 Size 1 braking resistor installing instructions

Figure 3-53 Installing the heatsink mounted braking resistor on size 1

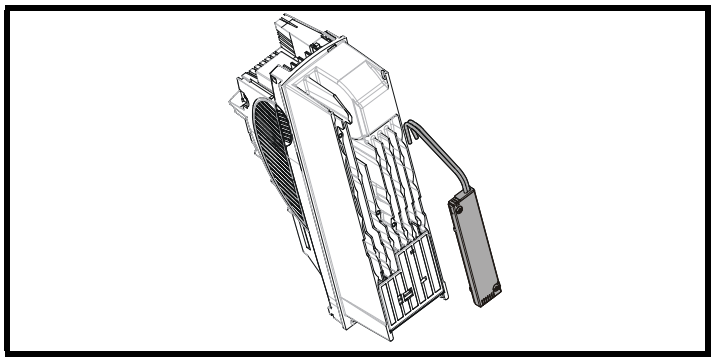

- Remove both terminal covers as detailed in section 3.3.1 *Removing the terminal covers* on page 29.
- Remove the two break-outs that line-up with the BR and +DC terminal connections as detailed in section 3.3.2 *Removing the finger-guard and DC terminal cover break-outs* on page 32.
- Install the braking resistor to the heatsink as shown in Figure 3-53. The resistor is installed with captive screws.
- The screws should be tightened to a maximum torque of 2 N m (1.5 lb ft).
- Ensure the cables are routed between the fins of the heatsink, and that the cables are not trapped between heatsink fins and the resistor.

Figure 3-54 Connecting the brake resistor on a surface mounted size 1

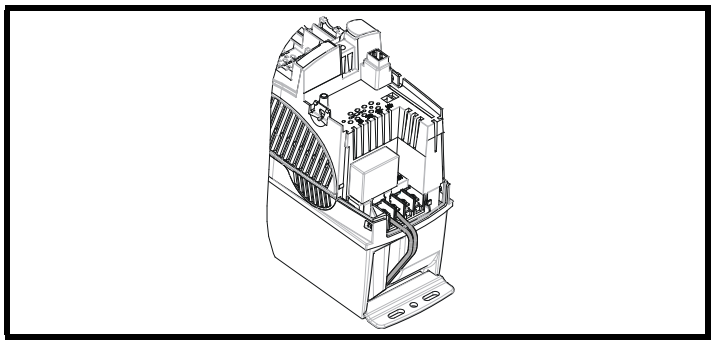

- Install the DC terminal cover grommets supplied in the accessory box with the drive, to the cables. To ensure a good seal, the grommets are a tight fit. Lubrication may be required to help install the grommets to the cables.
- Terminate the cables with suitable crimps and connect to the BR and +DC terminals. Tighten the screw terminals to a maximum torque of 1.5 Nm (1.1 lb ft).
- Replace both terminal covers.

Figure 3-55 Connecting the brake resistor on a through-panel mounted size 1

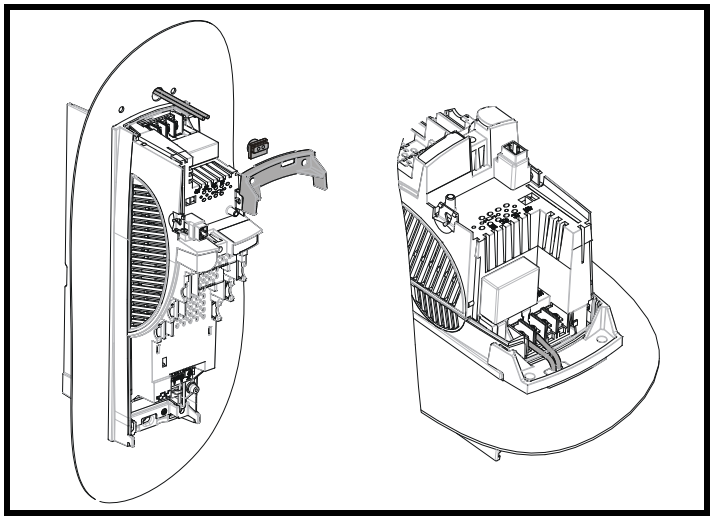

- See Figure 3-51 for through-panel mounting cut-out details.
- Pass the cables through the hole in the panel and install the through-panel grommet.
- Install the through-panel mounting bracket.
- Install the DC terminal cover grommets supplied in the accessory box with the drive, to the cables. To ensure a good seal, the grommets are a tight fit. Lubrication may be required to help install the grommets to the cables.
- Terminate the cables with suitable crimps and connect to the BR and +DC terminals. Tighten the screw terminals to a maximum torque of 1.5 Nm (1.1 lb ft).
- Replace both terminal covers.

3.11.4 Size 2 braking resistor installing instructions

Figure 3-56 Removing the baffle plate on a size 2

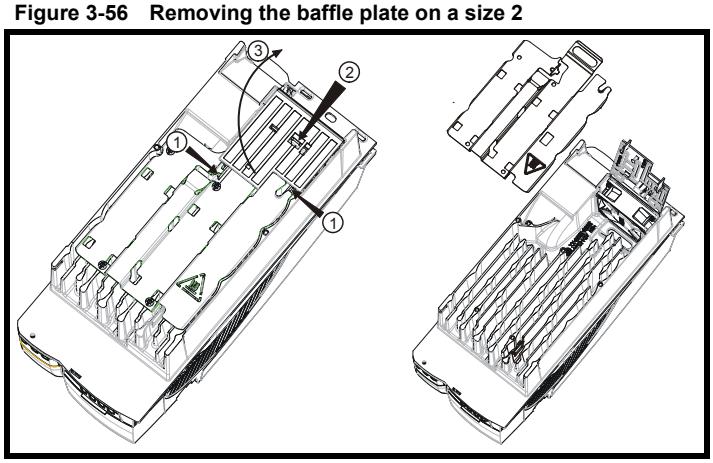

- Remove the DC cover as detailed in section 3.3.1 *Removing the terminal covers* on page 29.
- Remove the two break-outs that line-up with the BR and +DC terminal connections as detailed in section 3.3.2 *Removing the finger-guard and DC terminal cover break-outs* on page 32.
- Lift the hinged fan baffle by pushing plastic tabs in the direction shown (1). Push tab in the direction shown (2), and lift the baffle as shown (3).
- Remove the metal heatsink baffle plate by removing the two screws. These two screws are no longer required.

Figure 3-57 Modifying the fan baffle on a size 2

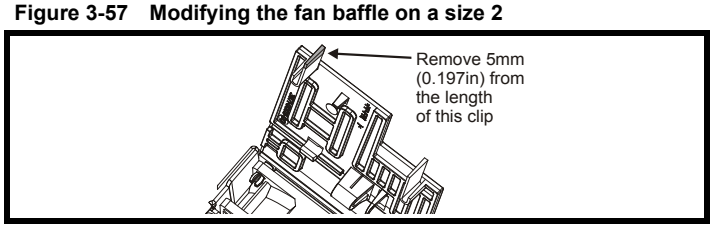

- Remove 5mm (0.197in) from the length of the clip on the plastic fan baffle.

Figure 3-58 Installing the heatsink mounted braking resistor on a size 2

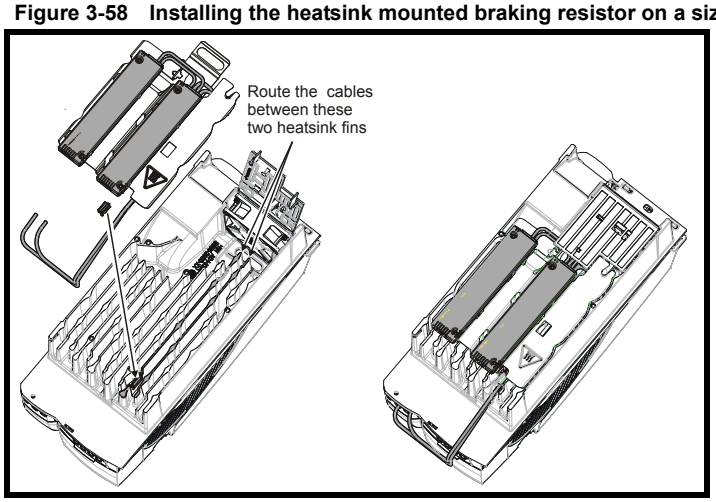

- Install clip to heatsink in the position shown in diagram opposite. Route the long cables of the resistor assembly between the fins of the heatsink as shown in Figure 3-58.
- Install the heatsink baffle plate in place with the cables routed underneath. Ensure the cables are not trapped between a heatsink fin and the baffle plate.
- Install the braking resistors to the heatsink. The resistors are installed with captive screws.
- The screws should be tightened to a maximum torque of 2.0 N m (1.5 lb ft).
- Close the hinged fan baffle.
- Install cables to heatsink clip.

Figure 3-59 Connecting the brake resistor on a surface mounted size 2

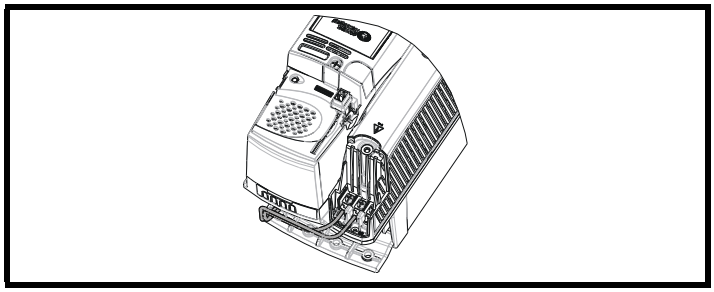

- Install the DC terminal cover grommets supplied in the accessory box with the drive, to the cables. To ensure a good seal, the grommets are a tight fit. Lubrication may be required to help install the grommets to the cables.
- Terminate the cables with suitable crimps and connect to the BR and DC2 terminals.
- Replace the terminal cover.

Figure 3-60 Connecting the brake resistor on a through-panel mounted size 2

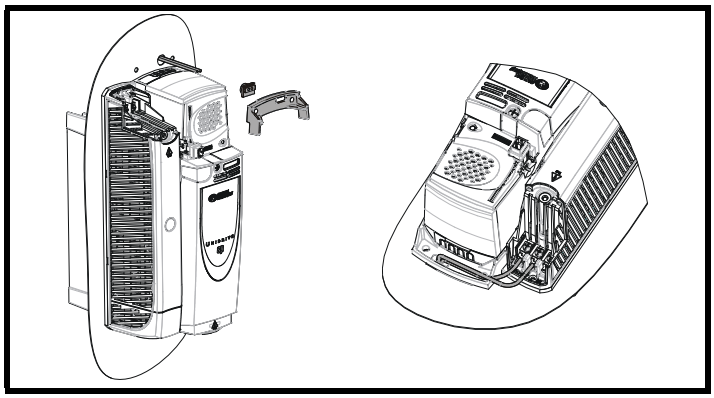

- See Figure 3-52 for through-panel mounting cut-out details.
- Pass the cables through the hole in the panel and install the hole grommet.
- Install the mounting bracket.
- Install the DC terminal cover grommets supplied in the accessory box with the drive, to the cables. To ensure a good seal, the grommets are a tight fit. Lubrication may be required to help install the grommets to the cables.
- Terminate the cables with suitable crimps and connect to the BR and DC2 terminals.
- Replace the terminal cover.

CAUTION

3.11.5 Braking resistor overload protection parameter settings

Failure to observe the following information may damage the resistor.

The drive's software contains an overload protection function for a braking resistor. On size 1 and 2 this function is enabled at default to protect the heatsink mounted resistor. Below are the parameter settings.

Parameter		200V drive	400V drive
Full power braking time	Pr **10.30**	0.04	0.02
Full power braking period	Pr **10.31**	3.3	

Parameter		Size 0		Size 1 and 2	
		200V drive	400V drive	200V drive	400V drive
Full power braking time	Pr **10.30**	0.06	0.01	0.09	0.02
Full power braking period	Pr **10.31**	2.6	1.7	3.3	

For more information on the braking resistor software overload protection, see the *Advanced User Guide*.

If the heatsink mounted braking resistor is to be used at more than half of its average power rating then the drive's cooling fan must be set to full speed by setting Pr **6.45** to On (1).

See section 4.9.1 *Heatsink mounted braking resistor* on page 78 for the resistor specifications.

3.12 Electrical terminals

3.12.1 Location of the power and ground terminals

Figure 3-61 Locations of the power and ground terminals

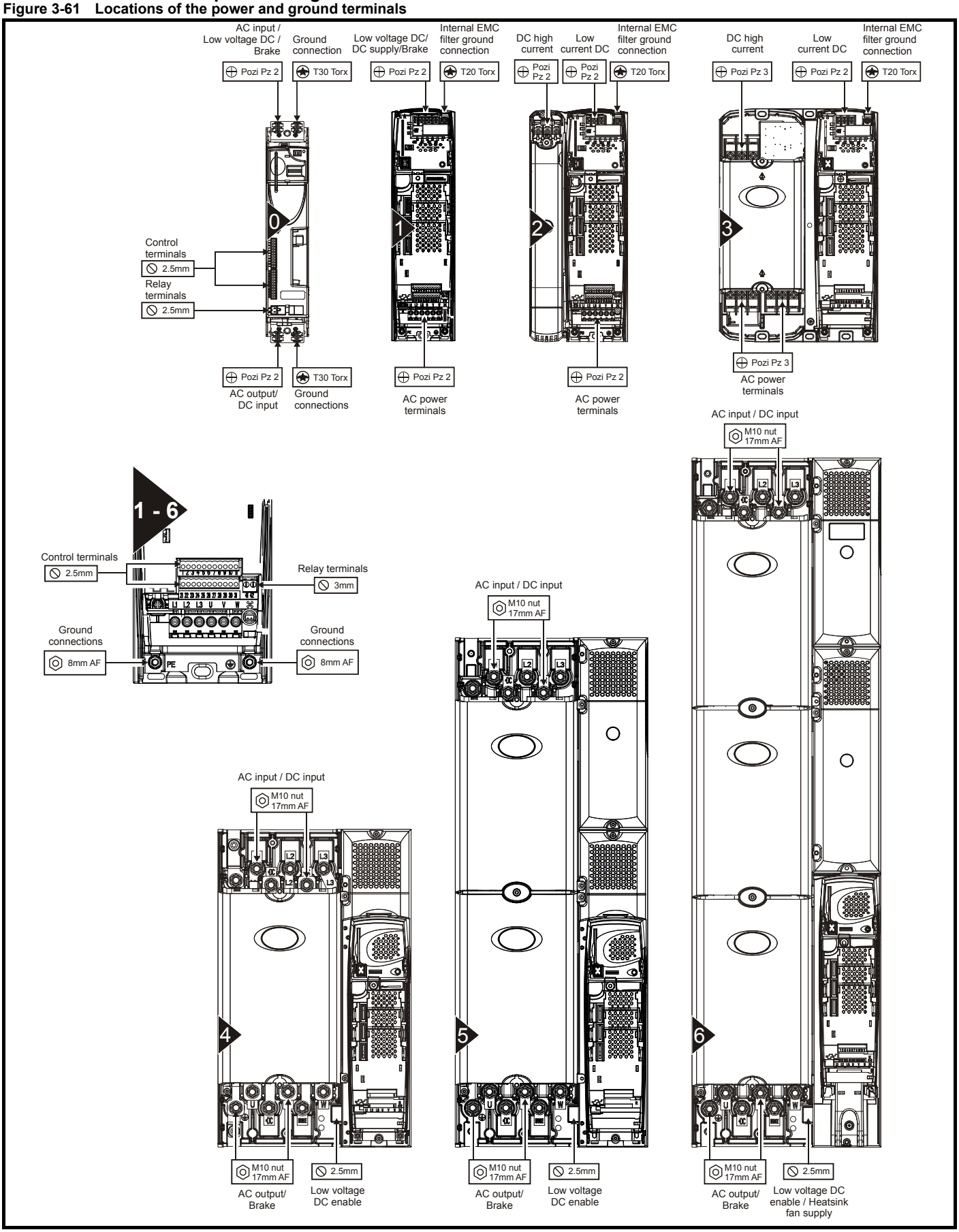

3.12.2 Terminal sizes and torque settings



To avoid a fire hazard and maintain validity of the UL listing, adhere to the specified tightening torques for the power and ground terminals. Refer to the following tables.

Table 3-7 Drive control and relay terminal data

Model	Connection type	Torque setting
All	Plug-in terminal block	0.5 N m (0.4 lb ft)

Table 3-8 Drive power terminal data

Model size	AC terminals	High current DC and braking	Low voltage DC	Ground terminal
0	Terminal block 1.0 N m (0.73 lb ft)			Screw (M6) 4.0 N m (2.9 lb ft)
1	Plug-in terminal block 1.5 N m (1.1 lb ft)	Terminal block (M4 screws) 1.5 N m (1.1 lb ft)	Terminal block (M4 screws) 1.5 N m (1.1 lb ft)	Stud (M5) 4.0 N m (2.9 lb ft)
2		Terminal block (M5 screws) 1.5 N m (1.1 lb ft)		
3	Terminal block (M6 screws) 2.5 N m (1.8 lb ft)			6.0 N m (4.4 lb ft)
4	M10 stud 15 N m (11.1 lb ft)			M10 stud 12 N m (8.8 lb ft)
5				
6				
Torque tolerance				±10%

The maximum torque for the studs securing the grounding bracket is 4.0 N m (2.9 lb ft).

Table 3-9 Plug-in terminal block maximum cable sizes

Model size	Terminal block description	Max cable size
All	11 way control connectors	1.5 mm^2 (16 AWG)
All	2 way relay connector	2.5 mm^2 (12 AWG)
1 and 2	6 way AC power connector	8 mm^2 (8 AWG)
4, 5 and 6	Low Voltage DC Enable connector	1.5 mm^2 (16 AWG)
6	Heatsink fan supply connector	1.5 mm^2 (16 AWG)

The maximum cable size for the power terminals on Unidrive SP size 0 is 4mm^2 (10 AWG).

Table 3-10 Schaffner external EMC filter terminal data (size 0)

CT part number	Power and ground connections	
	Max cable size	Max torque
4200-6000	4mm^2 12AWG	0.8 N m (0.6 lb ft)
4200-6001		
4200-6002		

Table 3-11 Schaffner external EMC filter terminal data (size 1 to 6)

CT part number	Power connections		Ground connections	
	Max cable size	Max torque	Ground stud size	Max torque
4200-6118	4mm^2 12AWG	0.8 N m (0.6 lb ft)	M5	3.5 N m (2.6 lb ft)
4200-6119				
4200-6210	10mm^2 8AWG	2 N m (1.5 lb ft)	M5	3.5 N m (2.6 lb ft)
4200-6305	16mm^2 6AWG	2.2 N m (1.6 lb ft)	M6	3.9 N m (2.9 lb ft)
4200-6307				
4200-6309				
4200-6406	50mm^2 0AWG	8 N m (5.9 lb ft)	M10	25 N m (18.4 lb ft)
4200-6408	25mm^2 4AWG	2.3 N m (1.7 lb ft)	M6	3.9 N m (2.9 lb ft)
4200-6503	95mm^2 4/0AWG	20 N m (14.7 lb ft)	M10	25 N m (18.4 lb ft)
4200-6504	50mm^2 0AWG	8 N m (5.9 lb ft)	M10	25 N m (18.4 lb ft)
4200-6603			M10	25 N m (18.4 lb ft)
4200-6604				

Table 3-12 Epcos external EMC Filter terminal data

CT part number	Power connections		Ground connections	
	Max cable size	Max torque	Ground stud size	Max torque
4200-6120	4mm^2 12AWG	0.6 N m (0.4 lb ft)	M5	3.0 N m (2.2 lb ft)
4200-6121				
4200-6211	10mm^2 8AWG	1.35 N m (1.0 lb ft)	M5	3.0 N m (2.2 lb ft)
4200-6306	16mm^2 6AWG	2.2 N m (1.6 lb ft)	M6	5.1 N m (3.8 lb ft)
4200-6308	10mm^2 8AWG	1.35 N m (1.0 lb ft)		
4200-6405	50mm^2 0AWG	6.8 N m (5.0 lb ft)	M10	10 N m (7.4 lb ft)
4200-6407				
4200-6501	95mm^2 4/0AWG	20 N m (14.7 lb ft)		
4200-6502				
4200-6601				
4200-6602				

3.13 Routine maintenance

The drive should be installed in a cool, clean, well ventilated location. Contact of moisture and dust with the drive should be prevented.

Regular checks of the following should be carried out to ensure drive / installation reliability are maximized:

Environment	
Ambient temperature	Ensure the enclosure temperature remains at or below maximum specified
Dust	Ensure the drive remains dust free – check that the heatsink and drive fan are not gathering dust. The lifetime of the fan is reduced in dusty environments.
Moisture	Ensure the drive enclosure shows no signs of condensation
Enclosure	
Enclosure door filters	Ensure filters are not blocked and that air is free to flow
Electrical	
Screw connections	Ensure all screw terminals remain tight
Crimp terminals	Ensure all crimp terminals remains tight – check for any discoloration which could indicate overheating
Cables	Check all cables for signs of damage

4 Electrical installation

Many cable management features have been incorporated into the product and accessories, this chapter shows how to optimize them. Key features include:

- SAFE TORQUE OFF function
- Internal EMC filter
- EMC compliance with shielding / grounding accessories
- Product rating, fusing and cabling information
- Brake resistor details (selection / ratings)

WARNING

Electric shock risk
The voltages present in the following locations can cause severe electric shock and may be lethal:

- AC supply cables and connections
- DC and brake cables, and connections
- Output cables and connections
- Many internal parts of the drive, and external option units

Unless otherwise indicated, control terminals are single insulated and must not be touched.

WARNING

Isolation device
The AC supply must be disconnected from the drive using an approved isolation device before any cover is removed from the drive or before any servicing work is performed.

WARNING

STOP function
The STOP function does not remove dangerous voltages from the drive, the motor or any external option units.

WARNING

SAFE TORQUE OFF function
The SAFE TORQUE OFF function does not remove dangerous voltages from the drive, the motor or any external option units.

WARNING

Stored charge
The drive contains capacitors that remain charged to a potentially lethal voltage after the AC supply has been disconnected. If the drive has been energized, the AC supply must be isolated at least ten minutes before work may continue.
Normally, the capacitors are discharged by an internal resistor. Under certain, unusual fault conditions, it is possible that the capacitors may fail to discharge, or be prevented from being discharged by a voltage applied to the output terminals. If the drive has failed in a manner that causes the display to go blank immediately, it is possible the capacitors will not be discharged. In this case, consult Control Techniques or their authorized distributor.

WARNING

Equipment supplied by plug and socket
Special attention must be given if the drive is installed in equipment which is connected to the AC supply by a plug and socket. The AC supply terminals of the drive are connected to the internal capacitors through rectifier diodes which are not intended to give safety isolation. If the plug terminals can be touched when the plug is disconnected from the socket, a means of automatically isolating the plug from the drive must be used (e.g. a latching relay).

WARNING

Permanent magnet motors
Permanent magnet motors generate electrical power if they are rotated, even when the supply to the drive is disconnected. If that happens then the drive will become energized through its motor terminals.
If the motor load is capable of rotating the motor when the supply is disconnected, then the motor must be isolated from the drive before gaining access to any live parts.

4.1 Power connections

4.1.1 AC and DC connections

Figure 4-1 Size 0 power connections

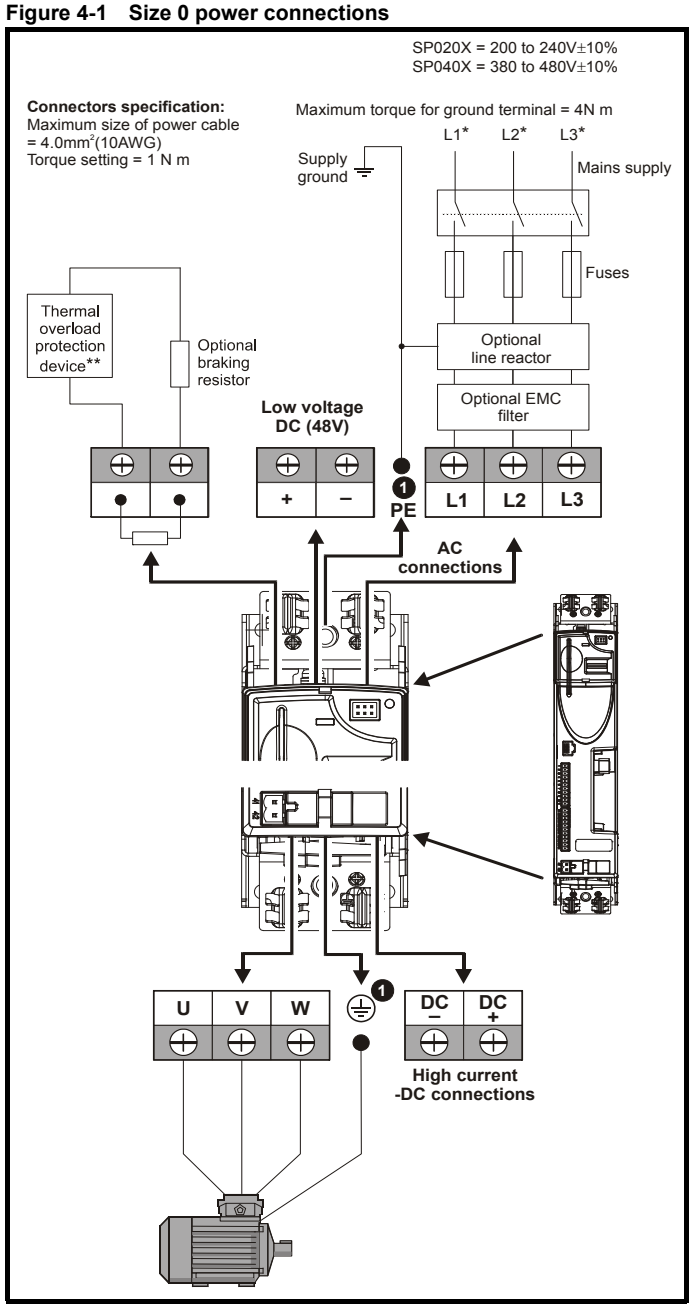

NOTE

* When using a 200V drive on a single phase supply, the live and neutral conductors can be connected to any of the AC connections on the drive.

** This is not required if the optional internal braking resistor is used.

1. Maximum torque for ground terminal connections = 4 N m (2.95 lb ft).

Figure 4-2 Size 1 power connections

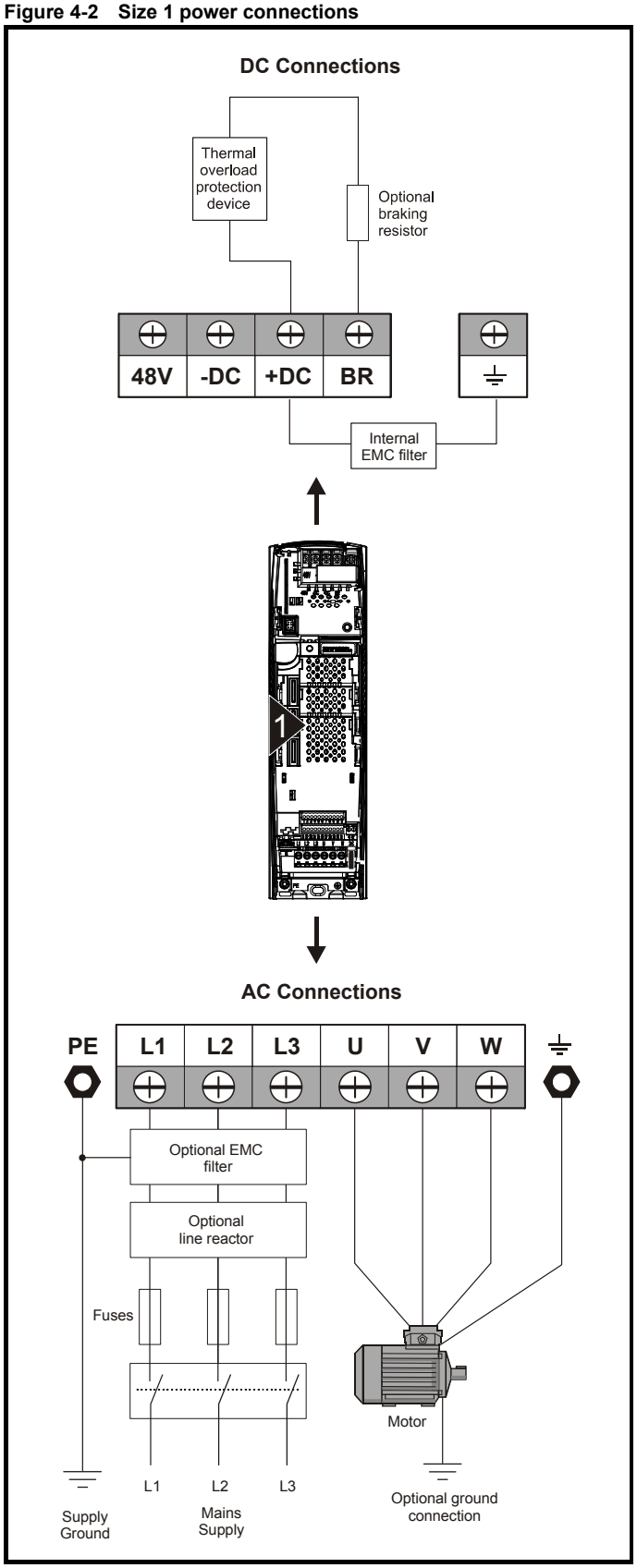

Figure 4-3 Size 2 power connections

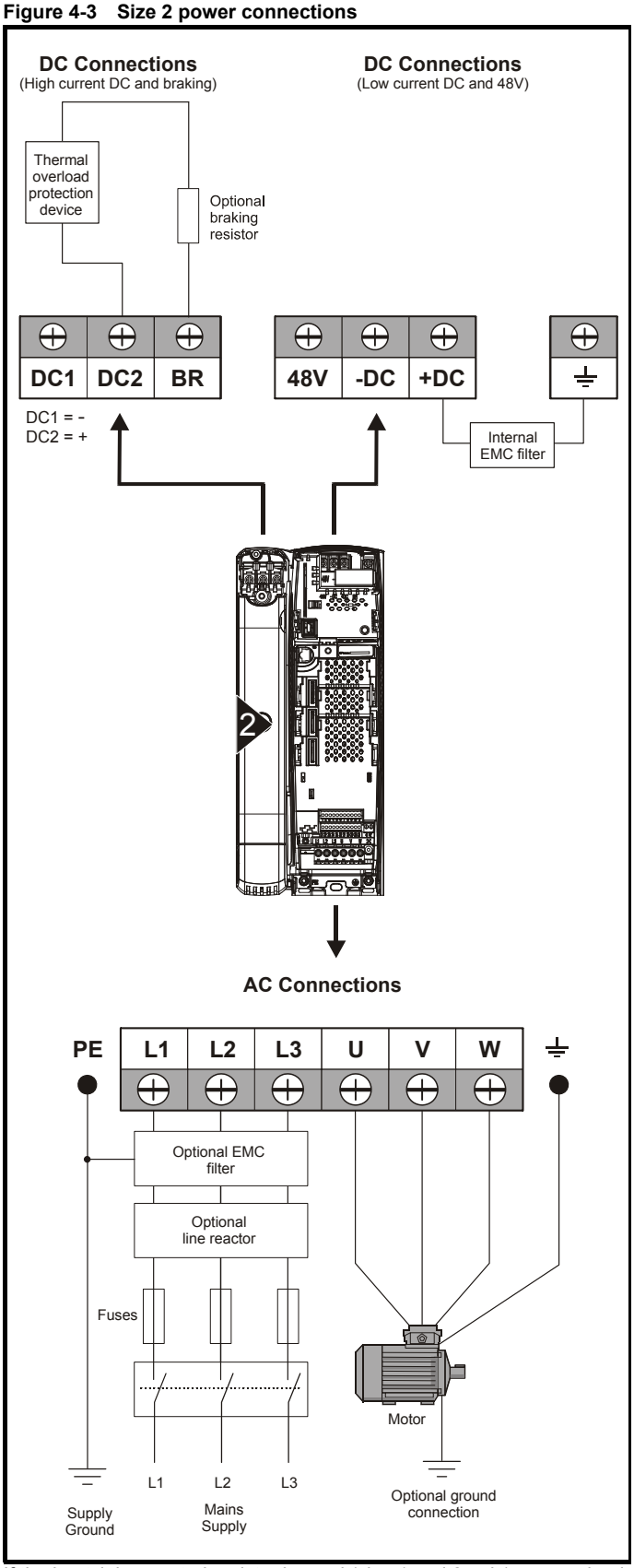

If the heatsink mounted resistor is used (size 1 and 2 only), an overload protection device is not required. The resistor is designed to fail safely under fault conditions.

See Figure 4-6 for further information on ground connections.

Figure 4-4 Size 3 power connections

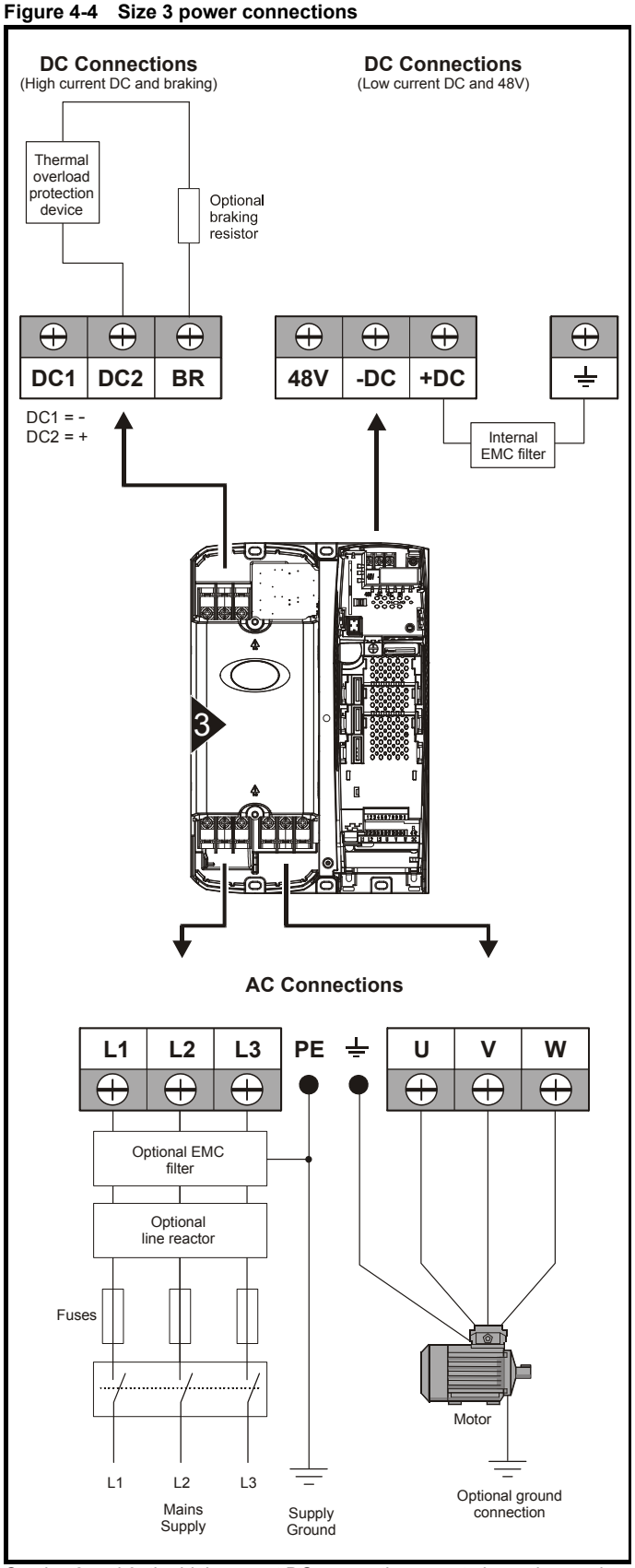

On size 2 and 3, the high current DC connections must always be used when using a braking resistor, supplying the drive from DC (low voltage DC or high voltage DC) or using the drive in a parallel DC bus system. The low current DC connection is used to connect low voltage DC to the drive internal power supply and to connect the internal EMC filter.

See Figure 4-7 for further information on ground connections.

Figure 4-5 Size 4, 5 and 6 power connections

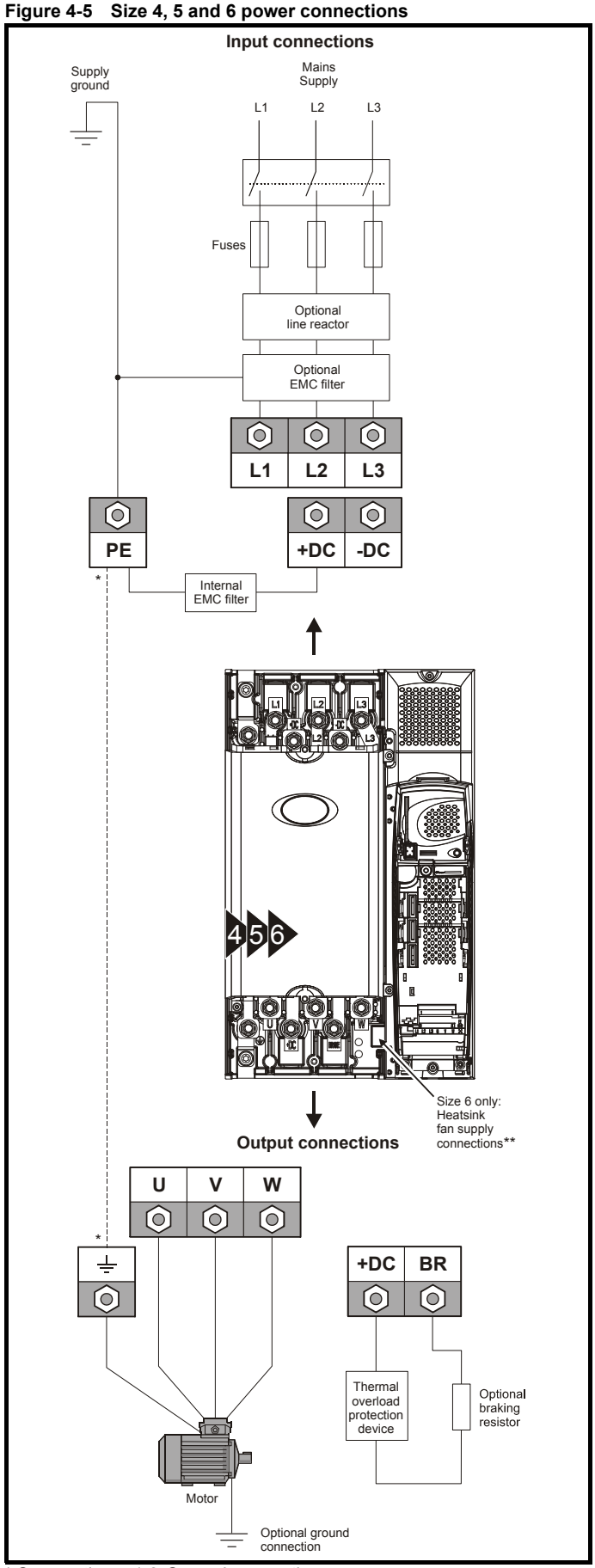

* See section 4.1.2 *Ground connections* .

** See section 4.4 *Heatsink fan supply* on page 72 for more information.

4.1.2 Ground connections

Electrochemical corrosion of grounding terminals
Ensure that grounding terminals are protected against corrosion i.e. as could be caused by condensation.

WARNING

Size 0
On a size 0, the supply and motor ground connections are made using an M6 screw at the top (supply) and bottom (motor) of the drive. See Figure 4-1 on page 67.

Size 1
On a size 1, the supply and motor ground connections are made using the studs located either side of the drive near the plug-in power connector. Refer to Figure 4-2 on page 68.

Size 2
On a size 2, the supply and motor ground connections are made using the grounding bridge that locates at the bottom of the drive. See Figure 4-6 for details.

Size 3
On a size 3, the supply and motor ground connections are made using an M6 nut and bolt that locates in the fork protruding from the heatsink between the AC supply and motor output terminals. See Figure 4-7 for details.

Size 4, 5 and 6
On a size 4, 5 and 6, the supply and motor ground connections are made using an M10 bolt at the top (supply) and bottom (motor) of the drive. See Figure 4-8 on page 71.

The supply ground and motor ground connections to the drive are connected internally by a copper conductor with a cross-sectional area given below:

Size 4: 19.2mm^2 (0.03in^2, or slightly bigger than 6 AWG)
Size 5: 60mm^2 (0.09in^2, or slightly bigger than 1 AWG)
Size 6: 75mm^2 (0.12in^2, or slightly bigger than 2/0 AWG)

This connection is sufficient to provide the ground (equipotential bonding) connection for the motor circuit under the following conditions:

To standard	Conditions
IEC 60204-1 & EN 60204-1	Supply phase conductors having cross-sectional area not exceeding: Size 4: 38.4mm^2 Size 5: 120mm^2 Size 6: 150mm^2
NFPA 79	Supply protection device rating not exceeding: Size 4: 200A Size 5: 600A Size 6: 1000A

If the necessary conditions are not met, an additional ground connection must be provided to link the motor circuit ground and the supply ground.

Figure 4-6 Size 2 ground connections

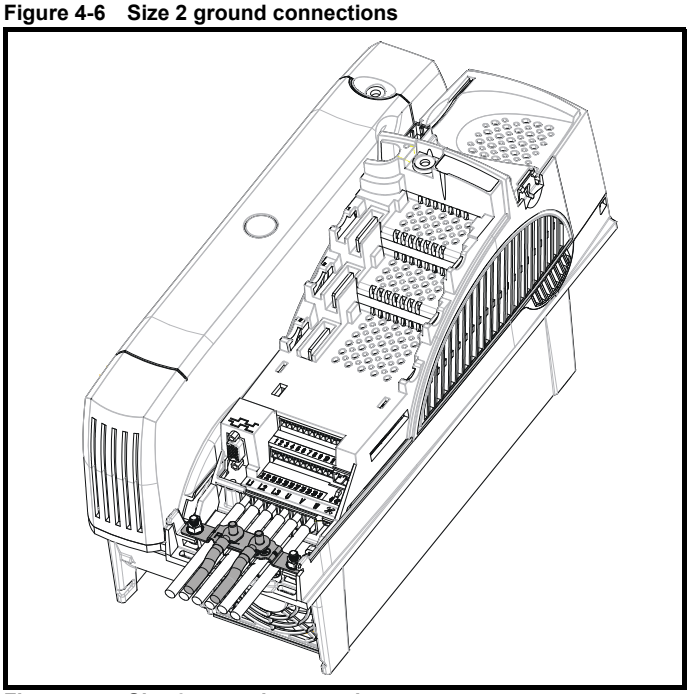

Figure 4-7 Size 3 ground connections

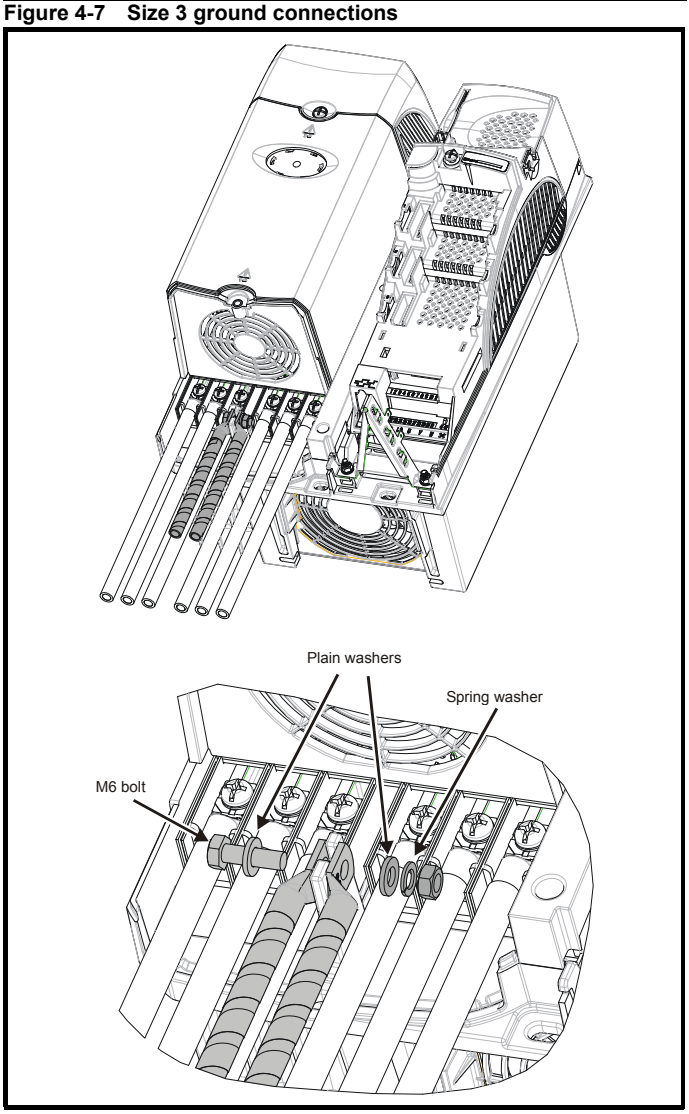

Figure 4-8 Size 4, 5 and 6 ground connections

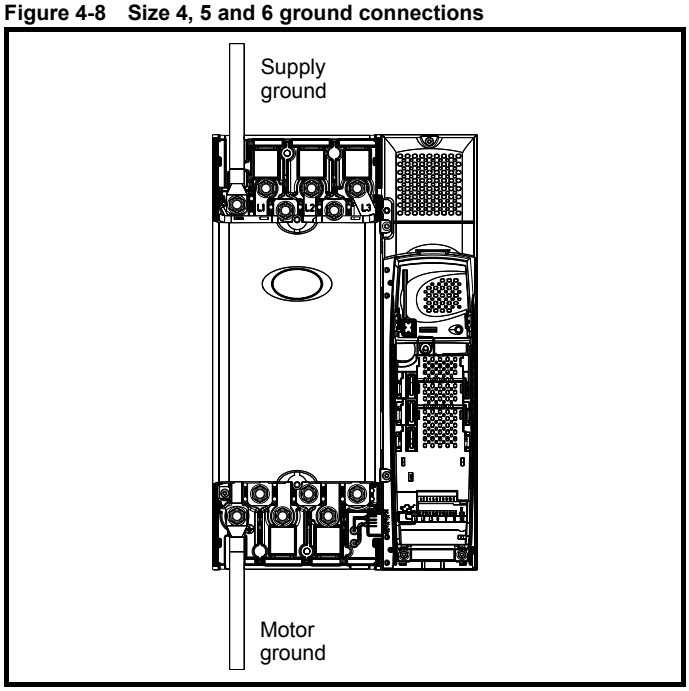

WARNING

The ground loop impedance must conform to the requirements of local safety regulations.

The drive must be grounded by a connection capable of carrying the prospective fault current until the protective device (fuse, etc.) disconnects the AC supply.

The ground connections must be inspected and tested at appropriate intervals.

4.2 AC supply requirements

Voltage:

SPx2xx	200V to 240V ±10%
SPx4xx	380V to 480V ±10%
SPx5xx	500V to 575V ±10%
SPx6xx	500V to 690V ±10%

Number of phases: 3*

*200V size 0 drives can also be used on a single phase supply.

Maximum supply imbalance: 2% negative phase sequence (equivalent to 3% voltage imbalance between phases).

Frequency range: 48 to 65 Hz

For UL compliance only, the maximum supply symmetrical fault current must be limited to 100kA

4.2.1 Supply types

All drives are suitable for use on any supply type i.e TN-S, TN-C-S, TT and IT.

- Supplies with voltage up to 600V may have grounding at any potential, i.e. neutral, centre or corner (“grounded delta”)
- Supplies with voltage above 600V may not have corner grounding

Drives are suitable for use on supplies of installation category III and lower, according to IEC60664-1. This means they may be connected permanently to the supply at its origin in a building, but for outdoor installation additional over-voltage suppression (transient voltage surge suppression) must be provided to reduce category IV to category III.

WARNING

Operation with IT (ungrounded) supplies:

Special attention is required when using internal or external EMC filters with ungrounded supplies, because in the event of a ground (earth) fault in the motor circuit the drive may not trip and the filter could be over-stressed. In this case, either the filter must not be used (removed) or additional independent motor ground fault protection must be provided. Refer to Table 4-1.

For instructions on removal, refer to Figure 4-22 *Removal of internal EMC filter and line to ground varistors (size 0)* , Figure 4-23 *Removal of internal EMC filter (size 1 to 3)* and Figure 4-24 *Removal of internal EMC filter (sizes 4 to 6)* on page 84.

For details of ground fault protection contact the supplier of the drive.

A ground fault in the supply has no effect in any case. If the motor must continue to run with a ground fault in its own circuit then an input isolating transformer must be provided and if an EMC filter is required it must be located in the primary circuit.

Unusual hazards can occur on ungrounded supplies with more than one source, for example on ships. Contact the supplier of the drive for more information.

Table 4-1 Behavior of the drive in the event of a motor circuit ground (earth) fault with an IT supply

Drive size	Internal filter only	External filter (with internal)
0 (200V)	May not trip – precautions required	Drive trips on fault
0 (400V)	Drive trips on fault	Drive trips on fault
1 and 2	Drive trips on fault	Drive trips on fault
3	May not trip – precautions required	Drive trips on fault
4 to 6	May not trip – precautions required	May not trip – precautions required

4.2.2 Supplies requiring line reactors

Input line reactors reduce the risk of damage to the drive resulting from poor phase balance or severe disturbances on the supply network.

Where line reactors are to be used, reactance values of approximately 2% are recommended. Higher values may be used if necessary, but may result in a loss of drive output (reduced torque at high speed) because of the voltage drop.

For all drive ratings, 2% line reactors permit drives to be used with a supply unbalance of up to 3.5% negative phase sequence (equivalent to 5% voltage imbalance between phases).

Severe disturbances may be caused by the following factors, for example:

- Power factor correction equipment connected close to the drive.
- Large DC drives having no or inadequate line reactors connected to the supply.
- Across the line (DOL) started motor(s) connected to the supply such that when any of these motors are started, the voltage dip exceeds 20%.

Such disturbances may cause excessive peak currents to flow in the input power circuit of the drive. This may cause nuisance tripping, or in extreme cases, failure of the drive.

Drives of low power rating may also be susceptible to disturbance when connected to supplies with a high rated capacity.

Line reactors are particularly recommended for use with the following drive models when one of the above factors exists, or when the supply capacity exceeds 175kVA:

SP0201 SP0202 SP0203 SP0204 SP0205
SP0401 SP0402 SP0403 SP0404 SP0405
SP1201 SP1202 SP1203 SP1204
SP1401 SP1402 SP1403 SP1404

Model sizes SP1405 to SP4606 have an internal DC choke and SP5201 to SP6602 have internal AC line chokes, so they do not require AC line reactors except for cases of excessive phase unbalance or extreme supply conditions.

When required, each drive must have its own reactor(s). Three individual reactors or a single three-phase reactor should be used.

Reactor current ratings

The current rating of the line reactors should be as follows:

Continuous current rating:

Not less than the continuous input current rating of the drive

Repetitive peak current rating:

Not less than twice the continuous input current rating of the drive

4.2.3 Input inductor calculation

To calculate the inductance required (at **Y**%), use the following equation:

$$L = \frac{Y}{100} \times \frac{V}{\sqrt{3}} \times \frac{1}{2\pi f I}$$

Where:

I = drive rated input current (A)

L = inductance (H)

f = supply frequency (Hz)

V = voltage between lines

4.3 Supplying the drive with DC / DC bus paralleling

The connecting of the DC bus between several drives is typically used to:

1. Return energy from a drive which is being overhauled by the load to a second motoring drive.
2. Allow the use of one braking resistor to dissipate regenerative energy from several drives.

There are limitations to the combinations of drives which can be used in this configuration.

For application data, contact the supplier of the drive.

4.4 Heatsink fan supply

The heatsink fan on size 0 to 5 is supplied internally by the drive. The heatsink fan on size 6 requires an external 24Vdc supply. The connections for the heatsink fan supply must be made to the upper terminal connector near to the W phase output on the drive. Figure 4-9 shows the position of the heatsink fan supply connections.

Figure 4-9 Location of the size 6 heatsink fan supply connections

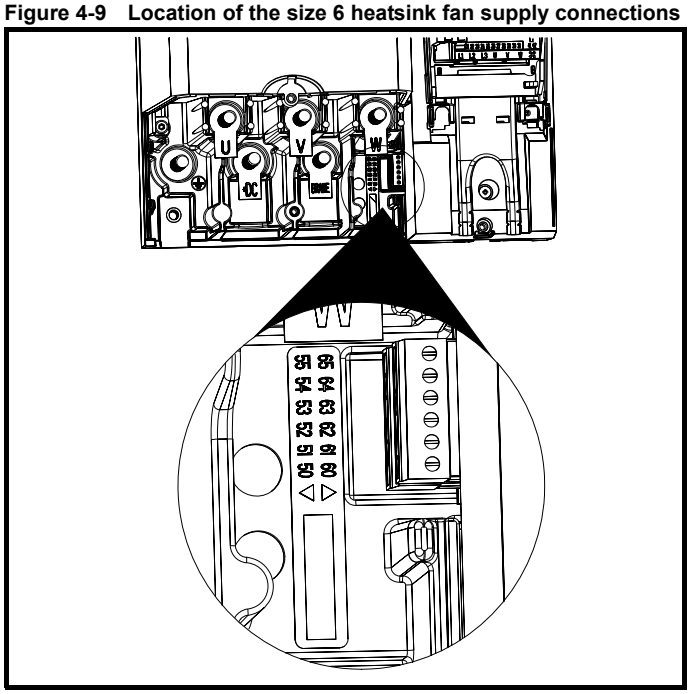

Figure 4-10 Size 6 heatsink fan supply connections

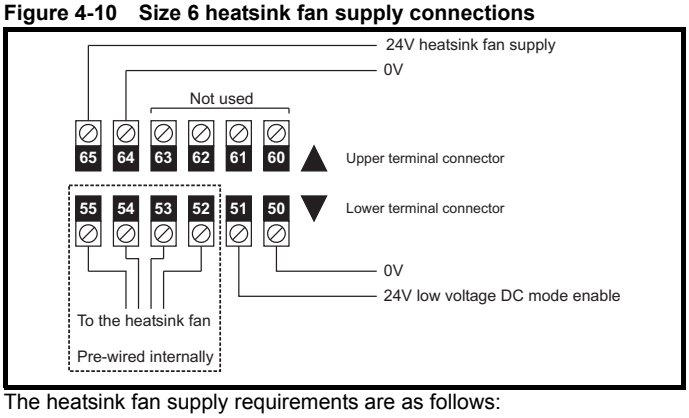

The heatsink fan supply requirements are as follows:

Nominal voltage:	24Vdc
Minimum voltage:	23.5Vdc
Maximum voltage:	27Vdc
Current drawn:	3.3A
Recommended power supply:	24V, 100W, 4.5A
Recommended fuse:	4A fast blow (I^2t less than $20A^2s$)

4.5 Control 24Vdc supply

The 24Vdc input has three main functions.

- It can be used to supplement the drive's own internal 24V when multiple SM-Universal Encoder Plus, SM-Encoder Output Plus, SM-I/O Plus, or SM-I/O 32 modules are being used and the current drawn by these modules is greater than the drive can supply. (If too much current is drawn from the drive, the drive will initiate a 'PS.24V' trip)
- It can be used as a back-up power supply to keep the control circuits of the drive powered up when the line power supply is removed. This allows any fieldbus modules, application modules, encoders or serial communications to continue to operate.
- It can be used to commission the drive when the line power supply is not available, as the display operates correctly. However, the drive will be in the UV trip state unless either line power supply or low voltage DC operation is enabled, therefore diagnostics may not be possible. (Power down save parameters are not saved when using the 24V back-up power supply input).

The working voltage range of the 24V power supply is as follows:

Maximum continuous operating voltage:	30.0 V
Minimum continuous operating voltage:	19.2 V
Nominal operating voltage:	24.0 V
Minimum start up voltage:	21.6 V
Maximum power supply requirement at 24V:	60 W
Recommended fuse:	3 A, 50 Vdc

Minimum and maximum voltage values include ripple and noise. Ripple and noise values must not exceed 5%.

4.6 Low voltage DC power supply

The drive can be operated from low voltage DC supplies, nominally 24Vdc (control) and 48Vdc (power). The low voltage DC power operating mode is designed either, to allow for motor operation in an emergency back-up situation following failure of the AC supply, for example in elevators; or to limit the speed of a servo motor during commissioning / start-up of equipment, for example a robot cell.

WARNING

With low voltage DC operation there is a reduction in the level of safety of the SAFE TORQUE OFF function. There exist certain unlikely faults which might permit the drive to produce some limited motor torque, if the DC supply has its negative terminal connected to ground.
See section 4.16 *SAFE TORQUE OFF* for methods for preventing a loss of the safety function under these conditions

The working voltage range of the low voltage DC power supply is as follows:

Size 0

Minimum continuous operating voltage:	36V
Minimum start up voltage:	40V
Nominal continuous operating voltage:	48 to 72V
Maximum braking IGBT turn on voltage:	95.4V
Maximum over voltage trip threshold:	104.4V

Size 1

Minimum continuous operating voltage:	36V
Minimum start up voltage:	40V
Nominal continuous operating voltage:	48V
Maximum braking IGBT turn on voltage:	63.6V
Maximum over voltage trip threshold:	69.6V

Size 2 and 3

Minimum continuous operating voltage:	36V
Minimum start up voltage:	40V
Nominal continuous operating voltage:	48 to 72V
Maximum braking IGBT turn on voltage:	95.4V
Maximum over voltage trip threshold:	104.4V

Size 4 (200V drives)

Minimum continuous operating voltage:	36V
Nominal continuous operating voltage:	48 to 72V
Maximum braking IGBT turn on voltage:	95.4V
Maximum over voltage trip threshold:	104.4V

Size 4, 5 and 6 (400V and 690V drives)

Minimum continuous operating voltage:	36V
Nominal continuous operating voltage:	48 to 96V
Maximum braking IGBT turn on voltage:	127.2V
Maximum over voltage trip threshold:	139.2V

See section 4.5 *Control 24Vdc supply* on page 72 for 24V back-up to control.

NOTE

The nominal low voltage supply level is set by the user in Pr **6.46**.
The default setting is 48V for all drive sizes.
The over voltage trip threshold and braking IGBT turn on voltage are scaled from this value as follows:

Brake IGBT turn on = 1.325 x Pr **6.46** (V)
Over voltage trip = 1.45 x Pr **6.46** (V)

For application data, refer to the *Unidrive SP Low Voltage DC Operation Installation Guide*.

4.7 Ratings

The input current is affected by the supply voltage and impedance.

Typical input current
The values of typical input current are given to aid calculations for power flow and power loss.

The values of typical input current are stated for a balanced supply.

Maximum continuous input current
The values of maximum continuous input current are given to aid the selection of cables and fuses. These values are stated for the worst case condition with the unusual combination of stiff supply with bad balance. The value stated for the maximum continuous input current would only be seen in one of the input phases. The current in the other two phases would be significantly lower.

The values of maximum input current are stated for a supply with a 2% negative phase-sequence imbalance and rated at the supply fault current given in Table 4-2.

Table 4-2 Supply fault current used to calculate maximum input currents

Model	Symmetrical fault level (kA)
All	100

WARNING

Fuses

The AC supply to the drive must be installed with suitable protection against overload and short-circuits. Table 4-3, Table 4-4 and Table 4-5 show recommended fuse ratings. Failure to observe this requirement will cause risk of fire.

Table 4-3 Size 0 to 3 input current, fuse and cable size ratings (European)

Model	Typical input current A	Maximum continuous input current A	Fuse rating IEC gG A	Cable size EN60204 Input mm^2	Cable size EN60204 Output mm^2
SP0201	3.2 (5.0)*	3.6 (5.0)*	6	0.75	0.75
SP0202	4.8 (7.6)*	5.6 (7.6)*	10	1	0.75
SP0203	6.0 (9.6)*	6.9 (9.6)*	12	1.5	0.75
SP0204	7.9 (13.5)*	8.9 (13.5)*	16	2.5	0.75
SP0205	10.6 (17.4)*	12.3 (17.4)*	20	4	0.75
SP1201	7.1	9.5	10	1.5	1.0
SP1202	9.2	11.3	12	1.5	1.0
SP1203	12.5	16.4	20	4.0	1.0
SP1204	15.4	19.1	20	4.0	1.5
SP2201	13.4	18.1	20	4.0	2.5
SP2202	18.2	22.6	25	4.0	4.0
SP2203	24.2	28.3	32	6.0	6.0
SP3201	35.4	43.1	50	16	16
SP3202	46.8	54.3	63	25	25
SP0401	2.0	2.3	4	0.75	0.75
SP0402	2.6	2.8	4	0.75	0.75
SP0403	3.2	3.3	6	0.75	0.75
SP0404	4.3	4.4	6	0.75	0.75
SP0405	5.6	5.7	8	0.75	0.75
SP1401	4.1	4.8	8	1.0	1.0
SP1402	5.1	5.8	8	1.0	1.0
SP1403	6.8	7.4	8	1.0	1.0
SP1404	9.3	10.6	12	1.5	1.0
SP1405	10	11	12	1.5	1.0
SP1406	12.6	13.4	16	2.5	1.5
SP2401	15.7	17	20	4.0	2.5
SP2402	20.2	21.4	25	4.0	4.0
SP2403	26.6	27.6	32	6.0	6.0
SP2404	26.6	27.6	32	6.0	6.0
SP3401	34.2	36.2	40	10	10
SP3402	40.2	42.7	50	16	16
SP3403	51.3	53.5	63	25	25
SP3501	5.0	6.7	8	1.0	1.0
SP3502	6.0	8.2	10	1.0	1.0
SP3503	7.8	11.1	12	1.5	1.0
SP3504	9.9	14.4	16	2.5	1.5
SP3505	13.8	18.1	20	4.0	2.5
SP3506	18.2	22.2	25	4.0	4.0
SP3507	22.2	26.0	32	6.0	6.0

*The value in the bracket is when the drive is used on a 1 phase supply.

Table 4-4 Size 0 to 3 input current, fuse and cable size ratings (USA)

Model	Typical input current A	Maximum continuous input current A	Fuse rating Class CC or J** <30A Class J** >30A A	Cable size UL508C Input AWG	Cable size UL508C Output AWG
SP0201	3.2 (5.0)*	3.6 (5.0)*	10	16	24
SP0202	4.8 (7.6)*	5.6 (7.6)*	10	16	22
SP0203	6.0 (9.6)*	6.9 (9.6)*	16	14	20
SP0204	7.9 (13.5)*	8.9 (13.5)*	20	12	18
SP0205	10.6 (17.4)*	12.3 (17.4)*	20	12	18
SP1201	7.1	9.5	10	14	18
SP1202	9.2	11.3	15	14	16
SP1203	12.5	16.4	20	12	14
SP1204	15.4	19.1	20	12	14
SP2201	13.4	18.1	20	12	14
SP2202	18.2	22.6	25	10	10
SP2203	24.2	28.3	30	8	8
SP3201	35.4	43.1	45	6	6
SP3202	46.8	54.3	60	4	4
SP0401	2.0	2.3	10	16	24
SP0402	2.6	2.8	10	16	24
SP0403	3.2	3.3	10	16	24
SP0404	4.3	4.4	10	16	22
SP0405	5.6	5.7	10	16	20
SP1401	4.1	4.8	8	16	22
SP1402	5.1	5.8	8	16	20
SP1403	6.8	7.4	10	16	18
SP1404	9.3	10.6	15	14	16
SP1405	10	11	15	14	14
SP1406	12.6	13.4	15	14	14
SP2401	15.7	17	20	12	14
SP2402	20.2	21.4	25	10	10
SP2403	26.6	27.6	30	8	8
SP2404	26.6	27.6	30	8	8
SP3401	34.2	36.2	40	6	6
SP3402	40.2	42.7	45	6	6
SP3403	51.3	53.5	60	4	4
SP3501	5.0	6.7	10	16	18
SP3502	6.0	8.2	10	16	16
SP3503	7.8	11.1	15	14	14
SP3504	9.9	14.4	15	14	14
SP3505	13.8	18.1	20	12	14
SP3506	18.2	22.2	25	10	10
SP3507	22.2	26.0	30	8	8

*The value in the bracket is when the drive is used on a 1 phase supply.
** Fast acting or high speed class J fuses only.

Table 4-5 Size 4 and larger input current, fuse and cable size ratings

Model	Typical input current	Maximum input current	Fuse option 1		Fuse option 2 semiconductor fuse in series with HRC fuse or breaker		Cable size			
			IEC class gR	North America: Ferraz HSJ	HRC IEC class gG UL class J	Semi-conductor IEC class aR	EN60204		UL508C	
	A	A	A	A	A	A	Input mm^2	Output mm^2	Input AWG	Output AWG
SP4201	62.1	68.9	100	90	90	160	25	25	3	3
SP4202	72.1	78.1	100	100	100	160	35	35	3	3
SP4203	94.5	99.9	125	125	125	200	70	70	1	1
SP5201	116	142	200	175	160	200	95	95	2/0	2/0
SP5202	137	165	250	225	200	250	120	120	4/0	4/0
SP4401	61.2	62.3	80	80	80	160	25	25	3	3
SP4402	76.3	79.6	100	110	100	200	35	35	2	2
SP4403	94.1	97.2	125	125	125	200	70	70	1	1
SP5401	126	131	200	175	160	200	95	95	2/0	2/0
SP5402	152	156	250	225	200	250	120	120	4/0	4/0
SP6401	224	241	315	300	250	315	2 x 70	2 x 70	2 x 2/0	2 x 2/0
SP6402	247	266	315	300	300	350	2 x 120	2 x 120	2 x 4/0	2 x 4/0
SP4601	23	26.5	63	60	32	125	4	4	10	10
SP4602	26.1	28.8	63	60	40	125	6	6	8	8
SP4603	32.9	35.1	63	60	50	125	10	10	8	8
SP4604	39	41	63	60	50	125	16	16	6	6
SP4605	46.2	47.9	63	60	63	125	16	16	6	6
SP4606	55.2	56.9	80	60	63	125	25	25	4	4
SP5601	75.5	82.6	125	100	90	160	35	35	2	2
SP5602	89.1	94.8	125	100	125	160	50	50	1	1
SP6601	128	138	200	200	200	200	2 x 50	2 x 50	2 x 1	2 x 1
SP6602	144	156	200	200	200	200	2 x 50	2 x 50	2 x 1	2 x 1

NOTE

PVC insulated cable should be used.

Installation class (ref: IEC60364-5-52:2001)

B1 - Separate cables in conduit.
B2 - Multicore cable in conduit
C - Multicore cable in free air.

NOTE

Cable sizes are from IEC60364-5-52:2001 table A.52.C with correction factor for 40°C ambient of 0.87 (from table A52.14) for cable installation method B2 (multicore cable in conduit).

Cable size may be reduced if a different installation method is used, or if the ambient temperature is lower.

The recommended cable sizes above are only a guide. The mounting and grouping of cables affects their current-carrying capacity, in some cases smaller cables may be acceptable but in other cases a larger cable is required to avoid excessive temperature or voltage drop. Refer to local wiring regulations for the correct size of cables.

NOTE

The recommended output cable sizes assume that the motor maximum current matches that of the drive. Where a motor of reduced rating is used the cable rating may be chosen to match that of the motor. To ensure that the motor and cable are protected against overload, the drive must be programmed with the correct motor rated current.

NOTE

UL listing is dependent on the use of the correct type of UL-listed fuse, and applies when symmetrical short-circuit current does not exceed 100kA. See Chapter 14 *UL Listing Information* on page 301 for sizing information.

A fuse or other protection must be included in all live connections to the AC supply.

An MCB (miniature circuit breaker) or MCCB (moulded-case circuit-breaker) with type C may be used in place of fuses on sizes 1 to 3 under the following conditions:

- The fault-clearing capacity must be sufficient for the installation
- For frame sizes 2 and 3, the drive must be mounted in an enclosure which meets the requirements for a fire enclosure. See section 3.2.5 *Fire protection* on page 28 for more information.

See Chapter 14 *UL Listing Information* for UL listing requirements.

Fuse types

The fuse voltage rating must be suitable for the drive supply voltage.

Ground connections

The drive must be connected to the system ground of the AC supply. The ground wiring must conform to local regulations and codes of practice.

4.7.1 Main AC supply contactor

The recommended AC supply contactor type for sizes 10 to 6 is AC1.

4.8 Output circuit and motor protection

The output circuit has fast-acting electronic short-circuit protection which limits the fault current to typically no more than five times the rated output current, and interrupts the current in approximately 20µs. No additional short-circuit protection devices are required.

The drive provides overload protection for the motor and its cable. For this to be effective, Pr **0.46** *Motor rated current* must be set to suit the motor.



Pr **0.46** *Motor rated current* must be set correctly to avoid a risk of fire in the event of motor overload.

There is also provision for the use of a motor thermistor to prevent over-heating of the motor, e.g. due to loss of cooling.

4.8.1 Cable types and lengths

Since capacitance in the motor cable causes loading on the output of the drive, ensure the cable length does not exceed the values given in Table 4-6, Table 4-7 and Table 4-8.

Use 105°C (221°F) (UL 60/75°C temp rise) PVC-insulated cable with copper conductors having a suitable voltage rating, for the following power connections:

- AC supply to external EMC filter (when used)
- AC supply (or external EMC filter) to drive
- Drive to motor
- Drive to braking resistor

Table 4-6 Maximum motor cable lengths (200V drives)

<table>
<tr><th colspan="7">200V Nominal AC supply voltage</th></tr>
<tr><th rowspan="2">Model</th><th colspan="6">Maximum permissible motor cable length for each of the following frequencies</th></tr>
<tr><th>3kHz</th><th>4kHz</th><th>6kHz</th><th>8kHz</th><th>12kHz</th><th>16kHz</th></tr>
<tr><td>SP0201
SP0202
SP0203
SP0204
SP0205</td><td colspan="6">50m
(165ft)</td></tr>
<tr><td>SP1201</td><td colspan="3">65m (210ft)</td><td rowspan="4">75m
(245ft)</td><td rowspan="4">50m
(165ft)</td><td rowspan="4">37m
(120ft)</td></tr>
<tr><td>SP1202</td><td colspan="3">100m (330ft)</td></tr>
<tr><td>SP1203</td><td colspan="2">130m (425ft)</td><td rowspan="3">100m
(330ft)</td></tr>
<tr><td>SP1204
SP2201
SP2202
SP2203</td><td rowspan="2">200m
(660ft)</td><td rowspan="2">150m
(490ft)</td></tr>
<tr><td>SP3201
SP3202</td><td></td></tr>
<tr><td>SP4201
SP4202
SP4203</td><td>250m
(820ft)</td><td>185m
(607ft)</td><td>125m
(410ft)</td><td>90m
(295ft)</td><td></td><td></td></tr>
<tr><td>SP5201
SP5202</td><td>250m
(820ft)</td><td>185m
(607ft)</td><td>125m
(410ft)</td><td>90m
(295ft)</td><td></td><td></td></tr>
</table>

Table 4-7 Maximum motor cable lengths (400V drives)

<table>
<tr><th colspan="7">400V Nominal AC supply voltage</th></tr>
<tr><th rowspan="2">Model</th><th colspan="6">Maximum permissible motor cable length for each of the following frequencies</th></tr>
<tr><th>3kHz</th><th>4kHz</th><th>6kHz</th><th>8kHz</th><th>12kHz</th><th>16kHz</th></tr>
<tr><td>SP0401
SP0402
SP0403
SP0404
SP0405</td><td colspan="6">50m
(165ft)</td></tr>
<tr><td>SP1401</td><td colspan="4">65m (210ft)</td><td rowspan="4">50m
(165ft)</td><td rowspan="4">37m
(120ft)</td></tr>
<tr><td>SP1402</td><td colspan="3">100m (330ft)</td><td rowspan="3">75m
(245ft)</td></tr>
<tr><td>SP1403</td><td colspan="2">130m (425ft)</td><td rowspan="3">100m
(330ft)</td></tr>
<tr><td>SP1404
SP1405
SP1406
SP2401
SP2402
SP2403
SP2404
SP3401
SP3402
SP3403</td><td rowspan="2">200m
(660ft)</td><td rowspan="2">150m
(490ft)</td></tr>
<tr><td>SP4401
SP4402
SP4403
SP5401
SP5402
SP6401
SP6402</td><td>250m
(820ft)</td><td>185m
(607ft)</td><td>125m
(410ft)</td><td>90m
(295ft)</td><td></td><td></td></tr>
</table>

Table 4-8 Maximum motor cable lengths (575V drives)

<table>
<tr><th colspan="7">575V Nominal AC supply voltage</th></tr>
<tr><th rowspan="2">Model</th><th colspan="6">Maximum permissible motor cable length for each of the following frequencies</th></tr>
<tr><th>3kHz</th><th>4kHz</th><th>6kHz</th><th>8kHz</th><th>12kHz</th><th>16kHz</th></tr>
<tr><td>SP3501
SP3502
SP3503
SP3504
SP3505
SP3506
SP3507</td><td>200m
(660ft)</td><td>150m
(490ft)</td><td>100m
(330ft)</td><td>75m
(245ft)</td><td colspan="2"></td></tr>
</table>

Table 4-9 Maximum motor cable lengths (690V drives)

690V Nominal AC supply voltage						
Model	**Maximum permissible motor cable length for each of the following frequencies**					
	3kHz	**4kHz**	**6kHz**	**8kHz**	**12kHz**	**16kHz**
SP4601	250m (820ft)	185m (607ft)	125m (410ft)	90m (295ft)		
SP4602						
SP4603						
SP4604						
SP4605						
SP4606						
SP5601						
SP5602						
SP6601						
SP6602						

- Cable lengths in excess of the specified values may be used only when special techniques are adopted; refer to the supplier of the drive.
- The default switching frequency is 3kHz for open-loop and closed-loop vector and 6kHz for servo.

4.8.2 High-capacitance cables

The maximum cable length is reduced from that shown in Table 4-6, Table 4-7, Table 4-8 and Table 4-9 if high capacitance motor cables are used.

Most cables have an insulating jacket between the cores and the armor or shield; these cables have a low capacitance and are recommended. Cables that do not have an insulating jacket tend to have high capacitance; if a cable of this type is used, the maximum cable length is half that quoted in the tables. (Figure 4-11 shows how to identify the two types.)

Figure 4-11 Cable construction influencing the capacitance

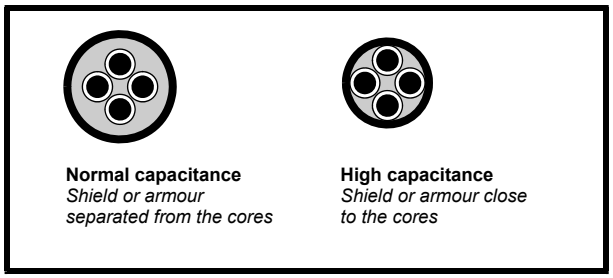

The cable used for Table 4-6, Table 4-7, Table 4-8 and Table 4-9 is shielded and contains four cores. Typical capacitance for this type of cable is 130pF/m (i.e. from one core to all others and the shield connected together).

4.8.3 Motor winding voltage

The PWM output voltage can adversely affect the inter-turn insulation in the motor. This is because of the high rate of change of voltage, in conjunction with the impedance of the motor cable and the distributed nature of the motor winding.

For normal operation with AC supplies up to 500Vac and a standard motor with a good quality insulation system, there is no need for any special precautions. In case of doubt the motor supplier should be consulted.

Special precautions are recommended under the following conditions, but only if the motor cable length exceeds 10m:

- AC supply voltage exceeds 500V
- DC supply voltage exceeds 670V
- Operation of 400V drive with continuous or very frequent sustained braking
- Multiple motors connected to a single drive

For multiple motors, the precautions given in section 4.8.4 *Multiple motors* should be followed.

For the other cases listed, it is recommended that an inverter-rated motor be used. This has a reinforced insulation system intended by the manufacturer for repetitive fast-rising pulsed voltage operation.

Users of 575V NEMA rated motors should note that the specification for inverter-rated motors given in NEMA MG1 section 31 is sufficient for motoring operation but not where the motor spends significant periods braking. In that case an insulation peak voltage rating of 2.2kV is recommended.

If it is not practical to use an inverter-rated motor, an output choke (inductor) should be used. The recommended type is a simple iron-cored component with a reactance of about 2%. The exact value is not critical. This operates in conjunction with the capacitance of the motor cable to increase the rise-time of the motor terminal voltage and prevent excessive electrical stress.

4.8.4 Multiple motors

Open-loop only

If the drive is to control more than one motor, one of the fixed V/F modes should be selected (Pr **5.14** = Fd or SrE). Make the motor connections as shown in Figure 4-12 and Figure 4-13. The maximum cable lengths in Table 4-6, Table 4-7, Table 4-8 and Table 4-9 apply to the sum of the total cable lengths from the drive to each motor.

It is recommended that each motor is connected through a protection relay since the drive cannot protect each motor individually. For ⅄ connection, a sinusoidal filter or an output inductor must be connected as shown in Figure 4-13, even when the cable lengths are less than the maximum permissible. For details of inductor sizes refer to the supplier of the drive.

Figure 4-12 Preferred chain connection for multiple motors

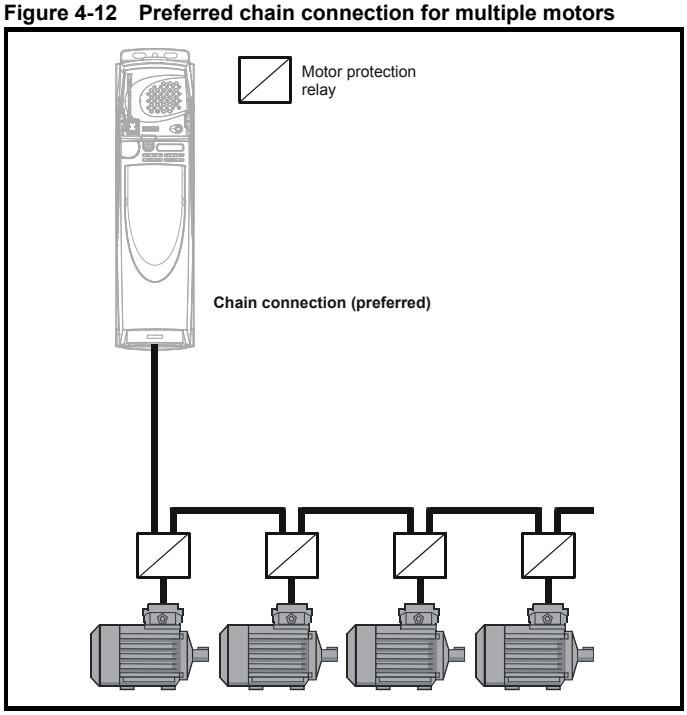

Figure 4-13 Alternative connection for multiple motors

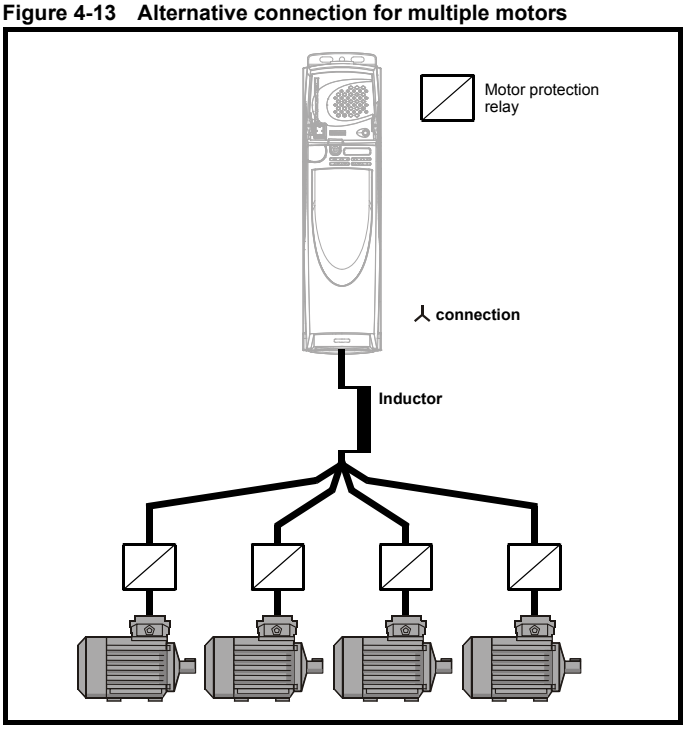

4.8.5 人 / Δ motor operation

The voltage rating for 人 and Δ connections of the motor should always be checked before attempting to run the motor.

The default setting of the motor rated voltage parameter is the same as the drive rated voltage, i.e.

400V drive 400V rated voltage
200V drive 200V rated voltage

A typical 3 phase motor would be connected in 人 for 400V operation or Δ for 200V operation, however, variations on this are common e.g. 人 690V Δ 400V

Incorrect connection of the windings will cause severe under or over fluxing of the motor, leading to a very poor output torque or motor saturation and overheating respectively.

4.8.6 Output contactor

WARNING

If the cable between the drive and the motor is to be interrupted by a contactor or circuit breaker, ensure that the drive is disabled before the contactor or circuit breaker is opened or closed. Severe arcing may occur if this circuit is interrupted with the motor running at high current and low speed.

A contactor is sometimes required to be installed between the drive and motor for safety purposes.

The recommended motor contactor is the AC3 type.

Switching of an output contactor should only occur when the output of the drive is disabled.

Opening or closing of the contactor with the drive enabled will lead to:

1. OI.AC trips (which cannot be reset for 10 seconds)
2. High levels of radio frequency noise emission
3. Increased contactor wear and tear

The Drive Enable terminal (T31) when opened provides a SAFE TORQUE OFF function. This can in many cases replace output contactors.

For further information see section 4.16 *SAFE TORQUE OFF* on page 99.

4.9 Braking

Braking occurs when the drive is decelerating the motor, or is preventing the motor from gaining speed due to mechanical influences. During braking, energy is returned to the drive from the motor.

When the motor is being braked by the drive, the maximum regenerated power that the drive can absorb is equal to the power dissipation (losses) of the drive.

When the regenerated power is likely to exceed these losses, the DC bus voltage of the drive increases. Under default conditions, the drive brakes the motor under PI control, which extends the deceleration time as necessary in order to prevent the DC bus voltage from rising above a user defined set-point.

If the drive is expected to rapidly decelerate a load, or to hold back an overhauling load, a braking resistor must be installed.

Table 4-10 shows the DC voltage level at which the drive turns on the braking transistor.

Table 4-10 Braking transistor turn on voltage

Drive voltage rating	DC bus voltage level
200V	390V
400V	780V
575V	930V
690V	1120V

NOTE

When a braking resistor is used, Pr **0.15** should be set to FASt ramp mode.

WARNING

High temperatures
Braking resistors can reach high temperatures. Locate braking resistors so that damage cannot result. Use cable having insulation capable of withstanding high temperatures.

4.9.1 Heatsink mounted braking resistor

A resistor has been especially designed to be mounted internal to the drive (size 0) or within the heatsink of the drive (sizes 1 and 2). See section 3.11 *Internal / heatsink mounted braking resistor* on page 60 for mounting details. The design of the resistor is such that no thermal protection circuit is required, as the device will fail safely under fault conditions. On sizes 0, 1 and 2, the in built software overload protection is set up at default for the designated heatsink mounted resistor. Table 4-11 provides the resistor data for each drive rating.

CAUTION

The internal braking resistor for size 0 is installed with a thermistor which must be connected to the drive whenever the internal braking resistor in installed.

NOTE

The internal/heatsink mounted resistor is suitable for applications with a low level of regen energy only. See Table 4-11.

Braking resistor overload protection parameter settings

Failure to observe the following information may damage the resistor.

CAUTION

The drive's software contains an overload protection function for a braking resistor. On size 0 to 2 this function is enabled at default to protect the heatsink mounted resistor. Below are the parameter settings.

Parameter		Size 0		Size 1 and 2	
		200V drive	400V drive	200V drive	400V drive
Full power braking time	Pr **10.30**	0.06	0.01	0.09	0.02
Full power braking period	Pr **10.31**	2.6	1.7	3.3	

For more information on the braking resistor software overload protection, see Pr **10.30** and Pr **10.31** full descriptions in the *Advanced User Guide*.

If the heatsink mounted braking resistor is to be used at more than half of its average power rating then the drive's cooling fan must be at full speed controlled by setting Pr **6.45** to On (1).

Table 4-11 Heatsink mounted braking resistor data

Parameter	Size 0	Size 1	Size 2
Part number	1299-0001-00	1220-2756-01	1220-2758-01
DC resistance at 25°C	70Ω	75Ω	37.5Ω
Peak instantaneous power over 1ms at nominal resistance	8.7kW	8kW	16kW
Average power over 60s *	50W	50W	100W
Ingress Protection (IP) rating	N/A	IP54	
Maximum altitude	2000m		

* To keep the temperature of the resistor below 70°C (158°F) in a 30°C (86°F) ambient, the average power rating is 50W for size 1 and 100W for size 2. The above parameter settings ensure this is the case.

Size 3 and larger do not have heatsink mounted braking resistors, hence the default values of Pr **10.30** and Pr **10.31** are 0 (i.e. software braking resistor overload protection disabled).

The internal braking resistor for size 0 can be used with a 400V size 0 drive even though its resistance is lower than the minimum resistance values given in Table , because of the following reasons.

- The braking resistor overload protection function in a 400V size 0 drive is set up to limit the power dissipated in the resistor
- The braking resistor is installed with a thermistor which will trip the drive if the resistor is too hot
- The power rating of the resistor is only 50W

If an external resistor is used with the drive, its resistance must be equal to or greater than the value given in Table .

4.9.2 External braking resistor

WARNING

Overload protection

When an external braking resistor is used, it is essential that an overload protection device is incorporated in the braking resistor circuit; this is described in Figure 4-14 on page 80.

When a braking resistor is to be mounted outside the enclosure, ensure that it is mounted in a ventilated metal housing that will perform the following functions:

- Prevent inadvertent contact with the resistor
- Allow adequate ventilation for the resistor

When compliance with EMC emission standards is required, external connection requires the cable to be armored or shielded, since it is not fully contained in a metal enclosure. See section 4.11.5 *Compliance with generic emission standards* on page 87 for further details.

Internal connection does not require the cable to be armored or shielded.

Minimum resistances and power ratings

Table 4-12 Minimum resistance values and peak power rating for the braking resistor at 40°C (104°F)

Model	Minimum resistance* Ω	Instantaneous power rating kW	Average power for 60s kW
SP0201	35	4.35	0.74
SP0202			1.1
SP0203			1.5
SP0204			2.2
SP0205			3.0
SP1201	43	3.5	1.5
SP1202			2.2
SP1203			3.0
SP1204	29	5.3	4.4
SP2201	18	8.9	6.0
SP2202			8.0
SP2203			8.9
SP3201	5.0	30.3	13.1
SP3202			19.3
SP4201**	5.0	30.3	22.5
SP4202**			27.8
SP4203**			30.3
SP5201**	3.5	53	43.5
SP5202**			
SP0401	105	5.79	0.74
SP0402			1.1
SP0403			1.5
SP0404			2.2
SP0405			3.0
SP1401	74	8.3	1.5
SP1402			2.2
SP1403			3.0
SP1404			4.4
SP1405	58	10.6	6.0
SP1406			8.0
SP2401	19	33.1	9.6
SP2402			13.1
SP2403			19.3
SP2404			22.5
SP3401	18	35.5	22.5
SP3402			27.8
SP3403			33.0
SP4401**	11	55.3	45.0
SP4402**			53.0
SP4403**	9	67.6	67.5

Table 4-12 Minimum resistance values and peak power rating for the braking resistor at 40°C (104°F)

Model	Minimum resistance* Ω	Instantaneous power rating kW	Average power for 60s kW
SP5401**	7	86.9	82.5
SP5402**			86.9
SP6401**	5	122	122
SP6402**			
SP3501	18	50.7	4.4
SP3502			6.0
SP3503			8.0
SP3504			9.6
SP3505			13.1
SP3506			19.3
SP3507			22.5
SP4601**	13	95.0	19.3
SP4602**			22.5
SP4603**			27.8
SP4604**			33.0
SP4605**			45.0
SP4606**			55.5
SP5601**	10	125	67.5
SP5602**			82.5
SP6601**	10	125	113
SP6602**			125

* Resistor tolerance: ±10%

** The power ratings specified are for a stand-alone drive only. If the drive is part of a common DC bus system different ratings must be used. Contact the supplier of the drive for more information.

For high-inertia loads or under continuous braking, the *continuous power* dissipated in the braking resistor may be as high as the power rating of the drive. The total *energy* dissipated in the braking resistor is dependent on the amount of energy to be extracted from the load.

The instantaneous power rating refers to the short-term maximum power dissipated during the *on* intervals of the pulse width modulated braking control cycle. The braking resistor must be able to withstand this dissipation for short intervals (milliseconds). Higher resistance values require proportionately lower instantaneous power ratings.

In most applications, braking occurs only occasionally. This allows the continuous power rating of the braking resistor to be much lower than the power rating of the drive. It is essential, though, that the instantaneous power rating and energy rating of the braking resistor are sufficient for the most extreme braking duty that is likely to be encountered.

Optimization of the braking resistor requires a careful consideration of the braking duty.

Select a value of resistance for the braking resistor that is not less than the specified minimum resistance. Larger resistance values may give a cost saving, as well as a safety benefit in the event of a fault in the braking system. Braking capability will then be reduced, which could cause the drive to trip during braking if the value chosen is too large.

Thermal protection circuit for the braking resistor

The thermal protection circuit must disconnect the AC supply from the drive if the resistor becomes overloaded due to a fault. Figure 4-14 shows a typical circuit arrangement.

Figure 4-14 Typical protection circuit for a braking resistor

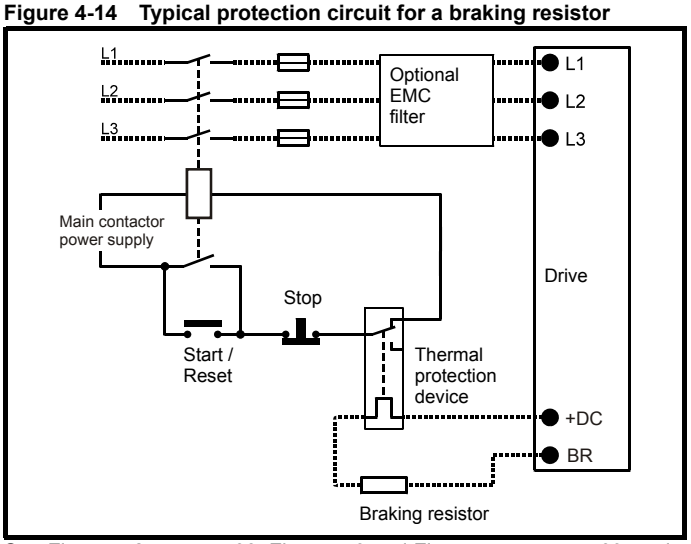

See Figure 4-2 on page 68, Figure 4-3 and Figure 4-4 on page 69, and Figure 4-5 on page 69 for the location of the +DC and braking resistor connections.

4.9.3 Braking resistor software overload protection

The drive software contains an overload protection function for a braking resistor. In order to enable and set-up this function, it is necessary to enter two values into the drive:

- Resistor short-time overload time (Pr **10.30**)
- Resistor minimum time between repeated short-time overloads (Pr **10.31**)

This data should be obtained from the manufacturer of the braking resistors.

Pr **10.39** gives an indication of braking resistor temperature based on a simple thermal model. Zero indicates the resistor is close to ambient and 100% is the maximum temperature the resistor can withstand. A br.rS alarm is given if this parameter is above 75% and the braking IGBT is active. An It.br trip will occur if Pr **10.39** reaches 100%, when Pr **10.37** is set to 0 (default value) or 1.

If Pr **10.37** is equal to 2 or 3 an It.br trip will not occur when Pr **10.39** reaches 100%, but instead the braking IGBT will be disabled until Pr **10.39** falls below 95%. This option is intended for applications with parallel connected DC buses where there are several braking resistors, each of which cannot withstand full DC bus voltage continuously. With this type of application it is unlikely the braking energy will be shared equally between the resistors because of voltage measurement tolerances within the individual drives. Therefore with Pr **10.37** set to 2 or 3, then as soon as a resistor has reached its maximum temperature the drive will disable the braking IGBT, and another resistor on another drive will take up the braking energy. Once Pr **10.39** has fallen below 95% the drive will allow the braking IGBT to operate again.

See the *Advanced User Guide* for more information on Pr **10.30**, Pr **10.31**, Pr **10.37** and Pr **10.39**.

This software overload protection should be used in addition to an external overload protection device.

4.10 Ground leakage

The ground leakage current depends upon whether the internal EMC filter is installed. The drive is supplied with the filter installed. Instructions for removing the internal filter are given in Figure 4-23 *Removal of internal EMC filter (size 1 to 3)* and Figure 4-24 *Removal of internal EMC filter (sizes 4 to 6)* on page 84.

With internal filter installed:

Size 0: 12mA* AC at 400V 50Hz

30µA DC with a 600V DC bus (10MΩ)

Size 1 to 3: 28mA* AC at 400V 50Hz

30µA DC with a 600V DC bus (10MΩ)

Size 4 to 6: 56mA* AC at 400V 50Hz

18µA DC with a 600V DC bus (33MΩ)

* Proportional to the supply voltage and frequency.

With internal filter removed:

<1mA

Note that in both cases there is an internal voltage surge protection device connected to ground. Under normal circumstances this carries negligible current.

WARNING

When the internal filter is installed the leakage current is high. In this case a permanent fixed ground connection must be provided, or other suitable measures taken to prevent a safety hazard occurring if the connection is lost.

4.10.1 Use of residual current device (RCD)

There are three common types of ELCB / RCD:

1. AC - detects AC fault currents
2. A - detects AC and pulsating DC fault currents (provided the DC current reaches zero at least once every half cycle)
3. B - detects AC, pulsating DC and smooth DC fault currents
   - Type AC should never be used with drives.
   - Type A can only be used with single phase drives
   - Type B must be used with three phase drives

WARNING

Only type B ELCB / RCD are suitable for use with 3 phase inverter drives.

If an external EMC filter is used, a delay of at least 50ms should be incorporated to ensure spurious trips are not seen. The leakage current is likely to exceed the trip level if all of the phases are not energized simultaneously.

4.11 EMC (Electromagnetic compatibility)

The requirements for EMC are divided into three levels in the following three sections:

Section 4.11.3, General requirements for all applications, to ensure reliable operation of the drive and minimise the risk of disturbing nearby equipment. The immunity standards specified in section 11 will be met, but no specific emission standards. Note also the special requirements given in *Surge immunity of control circuits - long cables and connections outside a building* on page 89 for increased surge immunity of control circuits where control wiring is extended.

Section 4.11.4, Requirements for meeting the EMC standard for power drive systems, IEC61800-3 (EN61800-3).

Section 4.11.5, Requirements for meeting the generic emission standards for the industrial environment, IEC61000-6-4, EN61000-6-4, EN50081-2.

The recommendations of section 4.11.3 will usually be sufficient to avoid causing disturbance to adjacent equipment of industrial quality. If particularly sensitive equipment is to be used nearby, or in a non-industrial environment, then the recommendations of section 4.11.4 or section 4.11.5 should be followed to give reduced radio-frequency emission.

In order to ensure the installation meets the various emission standards described in:

- The EMC data sheet available from the supplier of the drive
- The Declaration of Conformity at the front of this manual
- Chapter 12 *Technical Data* on page 265

The correct external EMC filter must be used and all of the guidelines in section 4.11.3 *General requirements for EMC* and section 4.11.5 *Compliance with generic emission standards* must be followed.

Table 4-13 Unidrive SP and EMC filter cross reference

Drive	Schaffner	Epcos
	CT part no.	CT part no.
SP0201 to SP0205 (1 phase)	4200-6000	
SP0201 to SP0205 (3 phase)	4200-6001	
SP1201 to SP1202	4200-6118	4200-6121
SP1203 to SP1204	4200-6119	4200-6120
SP2201 to SP2203	4200-6210	4200-6211
SP3201 to SP3202	4200-6307	4200-6306
SP4201 to SP4203	4200-6406	4200-6405
SP5201 to SP5202	4200-6503	4200-6501
SP0401 to SP0405	4200-6002	
SP1401 to SP1404	4200-6118	4200-6121
SP1405 to SP1406	4200-6119	4200-6120
SP2401 to SP2404	4200-6210	4200-6211
SP3401 to SP3403	4200-6305	4200-6306
SP4401 to SP4403	4200-6406	4200-6405
SP5401 to SP5402	4200-6503	4200-6501
SP6401 to SP6402	4200-6603	4200-6601
SP3501 to SP3507	4200-6309	4200-6308
SP4601 to SP4606	4200-6408	4200-6407
SP5601 to SP5602	4200-6504	4200-6502
SP6601 to SP6602	4200-6604	4200-6602

WARNING

High ground leakage current

When an EMC filter is used, a permanent fixed ground connection must be provided which does not pass through a connector or flexible power cord. This includes the internal EMC filter.

NOTE

The installer of the drive is responsible for ensuring compliance with the EMC regulations that apply where the drive is to be used.

4.11.1 Grounding hardware

The drive is supplied with a grounding bracket, and sizes 1 to 3 with a grounding clamp, to facilitate EMC compliance. They provide a convenient method for direct grounding of cable shields without the use of "pig-tails". Cable shields can be bared and clamped to the grounding bracket using metal clips or clamps[1] (not supplied) or cable ties. Note that the shield must in all cases be continued through the clamp to the intended terminal on the drive, in accordance with the connection details for the specific signal.

[1] A suitable clamp is the Phoenix DIN rail mounted SK14 cable clamp (for cables with a maximum outer diameter of 14mm).

- See Figure 4-15 for details of installing the grounded metal panel on size 0 drives.
- See Figure 4-16 and Figure 4-17 for details on installing the grounding clamp.
- See Figure 4-18 and Figure 4-19 for details on installing the grounding bracket.

Figure 4-15 Use of the EMC bracket on size 0

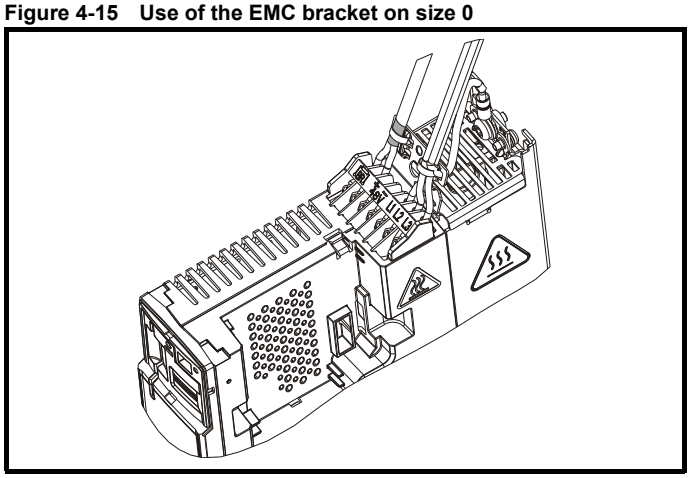

Figure 4-16 Installation of grounding clamp (size 1 and 2)

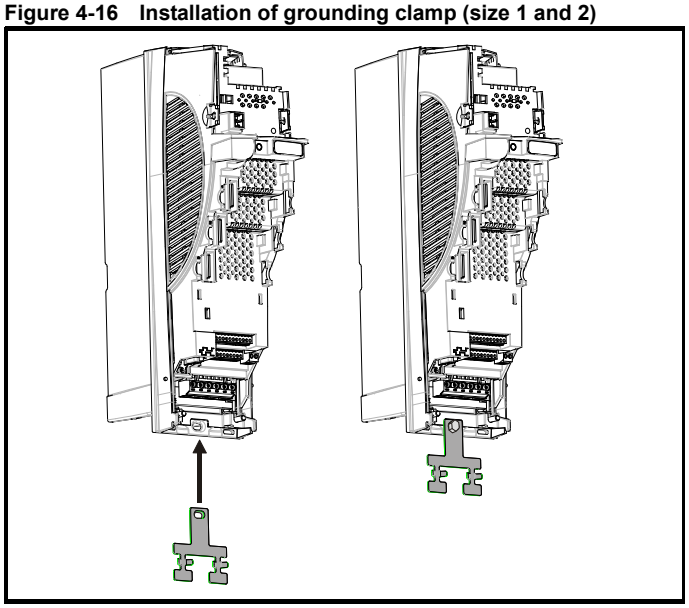

Figure 4-17 Installation of grounding clamp (size 3)

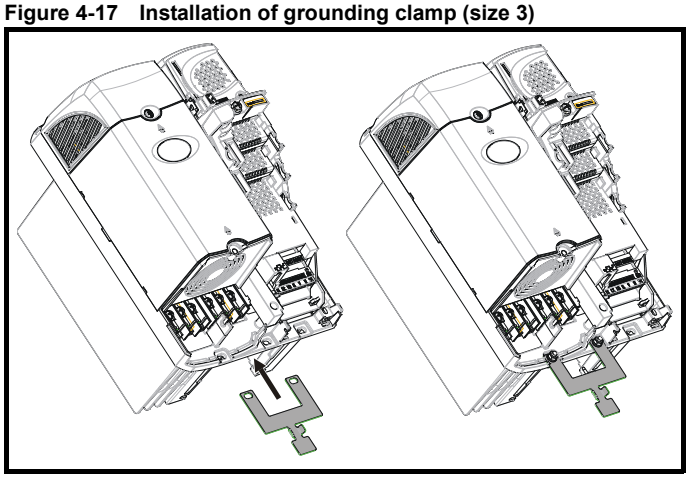

Figure 4-18 Installation of grounding bracket (size 0)

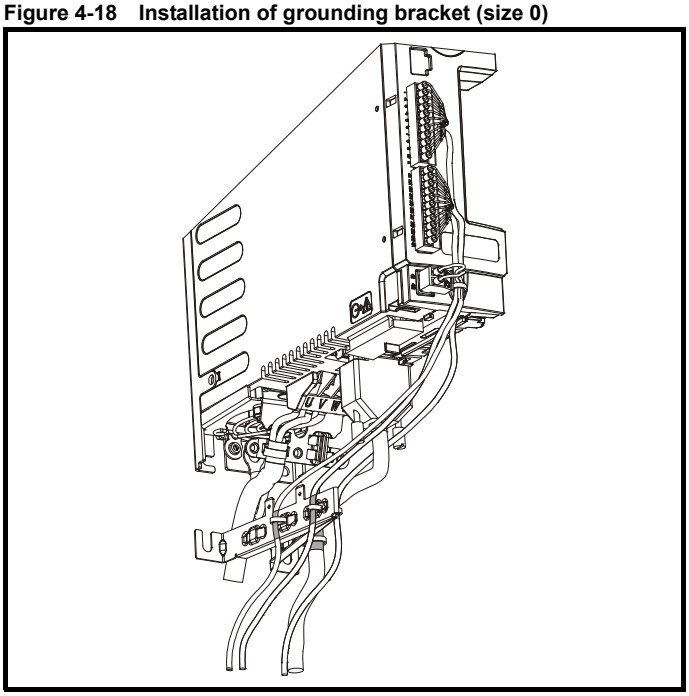

Figure 4-19 Installation of grounding bracket (sizes 1 to 6)

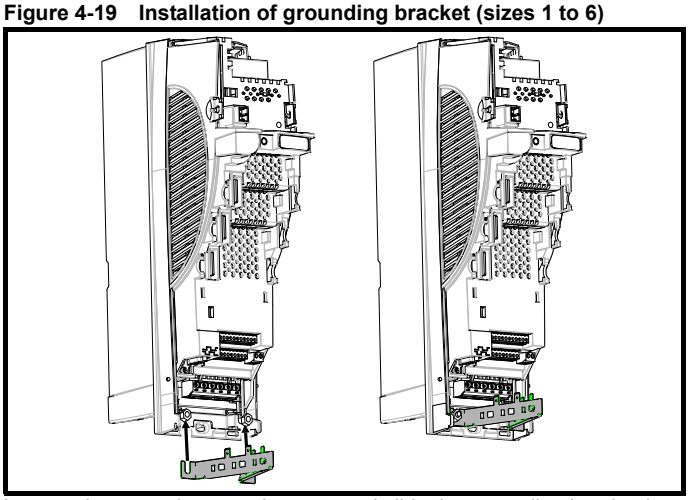

Loosen the ground connection nuts and slide the grounding bracket in the direction shown. Once in place, re-tighten the ground connection nuts.

WARNING

On size 1 and 2, the grounding bracket is secured using the power ground terminal of the drive. Ensure that the supply ground connection is secure after installing / removing the grounding bracket. Failure to do so will result in the drive not being grounded.

A faston tab is located on the grounding bracket for the purpose of connecting the drive 0V to ground should the user require to do so.

When a size 4 or 5 is through-panel mounted, the grounding link bracket must be folded upwards. A screw can be used to secure the bracket or it can be located under the mounting bracket to ensure that a ground connection is made. This is required to provide a grounding point for the grounding bracket as shown in Figure 4-20.

Figure 4-20 Size 4 and 5 grounding link bracket in its surface mount position (as supplied)

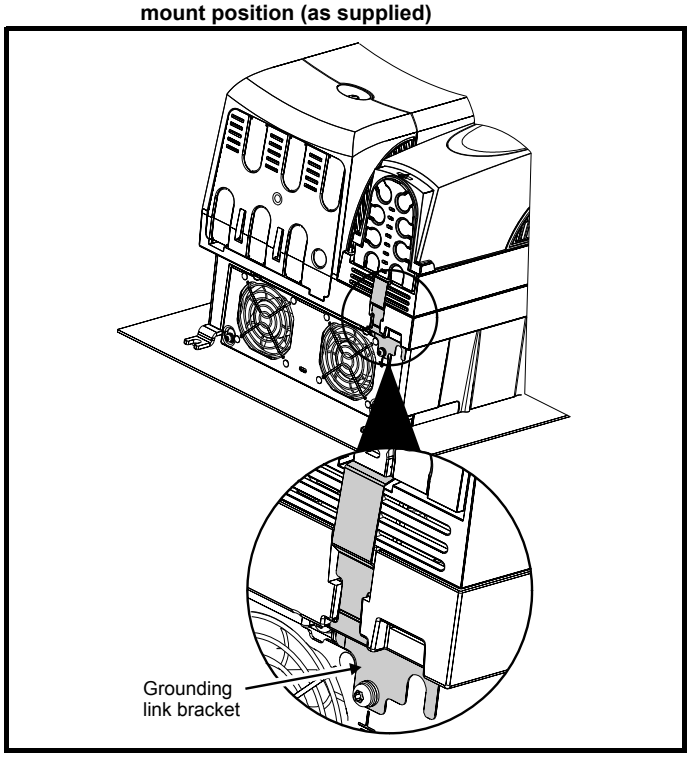

Figure 4-21 Size 4 and 5 grounding link bracket folded up into its through- panel mount position

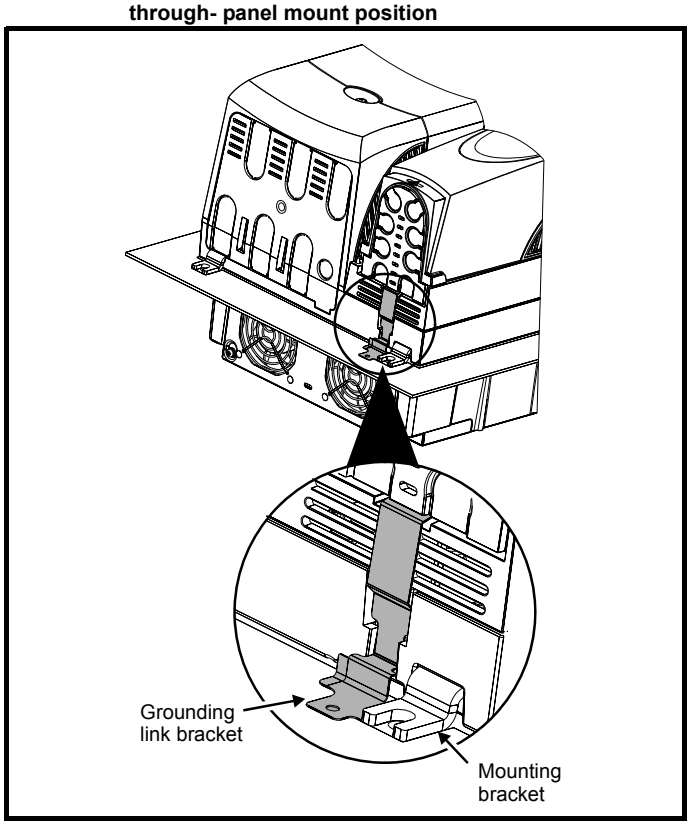

4.11.2 Internal EMC filter

It is recommended that the internal EMC filter be kept in place unless there is a specific reason for removing it.

WARNING

For 200V size 0 and frame sizes 3 and above, when the drive is used with ungrounded (IT) supplies the internal EMC filter must be removed unless additional motor ground fault protection is installed or, in the case of 200V size 0 and size 3 only, the external filter is also used.
For instructions on removal, refer to Figure 4-22, Figure 4-23 and Figure 4-24.
For details of ground fault protection contact the supplier of the drive.

If the drive is used as a motoring drive as part of a Unidrive SP regen system, then the internal EMC filter must be removed.

The internal EMC filter reduces radio-frequency emission into the line power supply. Where the motor cable is short, it permits the requirements of EN 61800-3:2004 to be met for the second environment - see section 4.11.4 *Compliance with EN 61800-3:2004 (standard for Power Drive Systems)* on page 86 and section 12.1.24 *Electromagnetic compatibility (EMC)* on page 277. For longer motor cables the filter continues to provide a useful reduction in emission level, and when used with any length of shielded motor cable up to the limit for the drive, it is unlikely that nearby industrial equipment will be disturbed. It is recommended that the filter be used in all applications unless the instructions given above require it to be removed or the ground leakage current of 12mA for size 0, 28mA for size 1 to 3 or 56mA for size 4 to 6 is unacceptable. See Figure 4-22, Figure 4-23 and Figure 4-24 for details of removing and installing the internal EMC filter.

Figure 4-22 Removal of internal EMC filter and line to ground varistors (size 0)

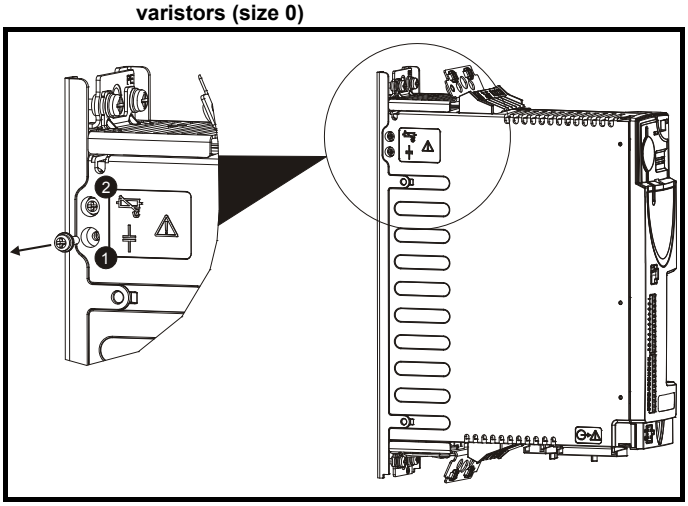

WARNING

The supply must be disconnected before removing the internal EMC filter or line to ground varistor screws.

1. Internal EMC filter. Remove the bottom screw as shown.
2. Line to ground varistors. Remove the top screw as shown.

NOTE

The line to ground varistors should only be removed in special circumstances.

Figure 4-23 Removal of internal EMC filter (size 1 to 3)

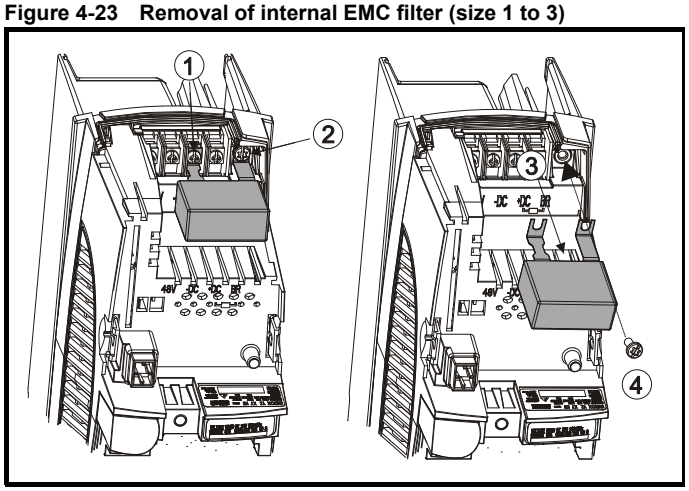

Loosen / remove the screws as shown (1) and (2).

Remove filter (3), and ensure the screws are replaced and re-tightened (4).

Figure 4-24 Removal of internal EMC filter (sizes 4 to 6)

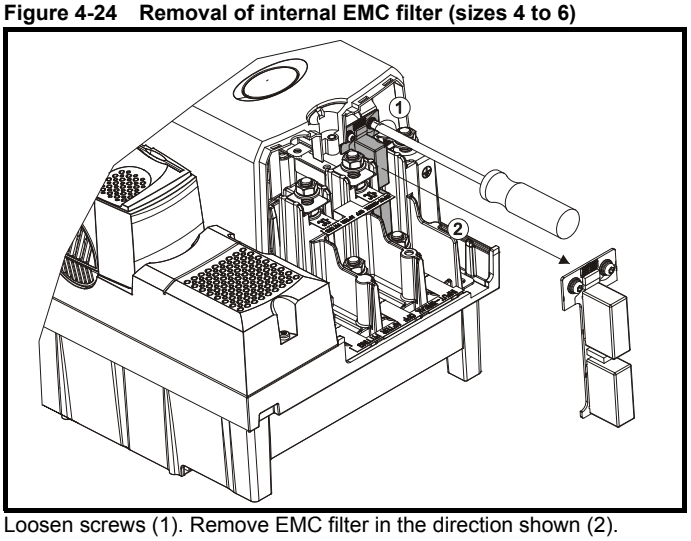

Loosen screws (1). Remove EMC filter in the direction shown (2).

4.11.3 General requirements for EMC

Ground (earth) connections

The grounding arrangements should be in accordance with Figure 4-25, which shows a single drive on a back-plate with or without an additional enclosure.

Figure 4-25 shows how to manage EMC when using an unshielded motor cable. However a shielded cable is preferable, in which case it should be installed as shown in section 4.11.5 *Compliance with generic emission standards* on page 87.

Figure 4-25 General EMC enclosure layout showing ground connections

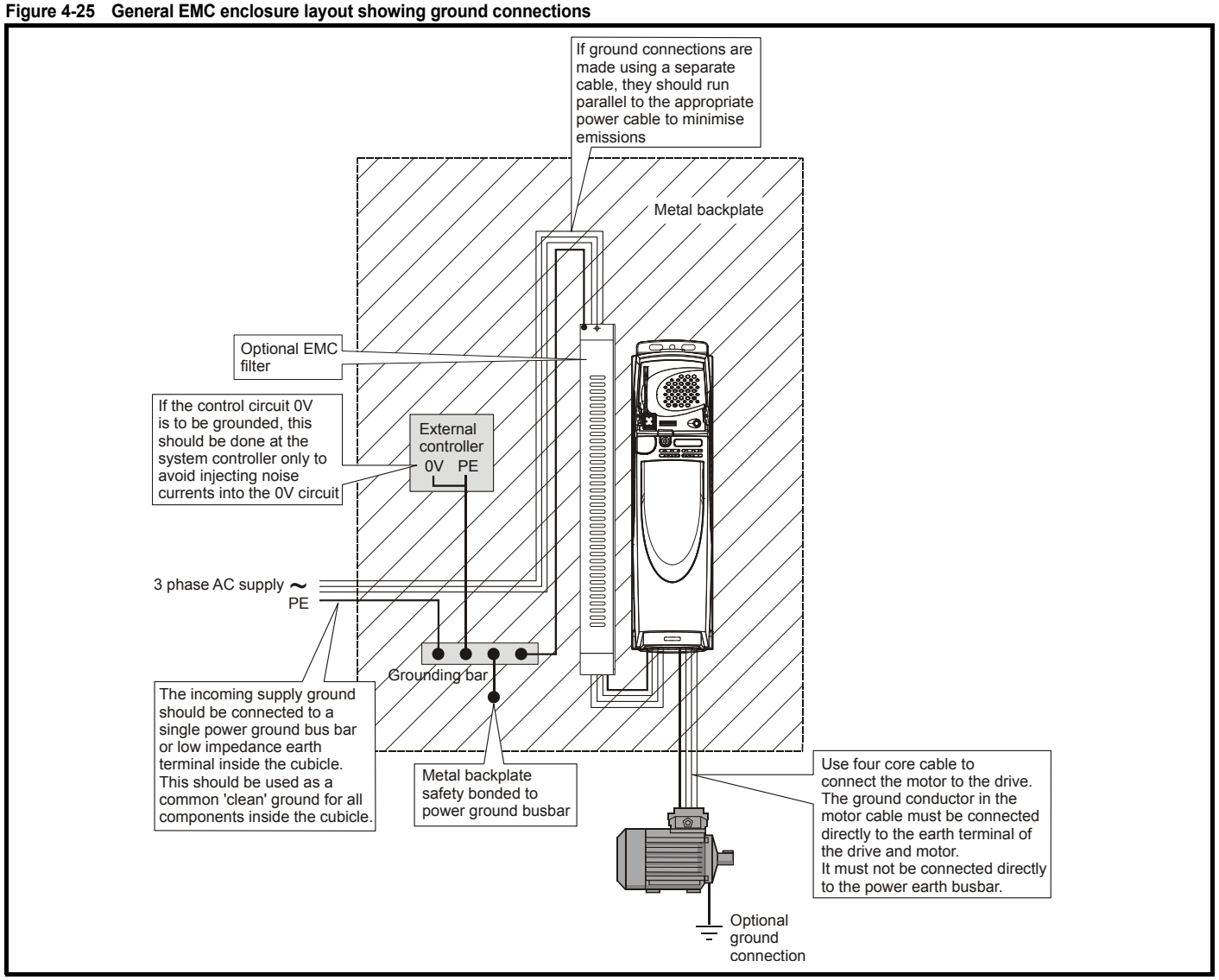

Cable layout

Figure 4-26 indicates the clearances which should be observed around the drive and related 'noisy' power cables by all sensitive control signals / equipment.

Figure 4-26 Drive cable clearances

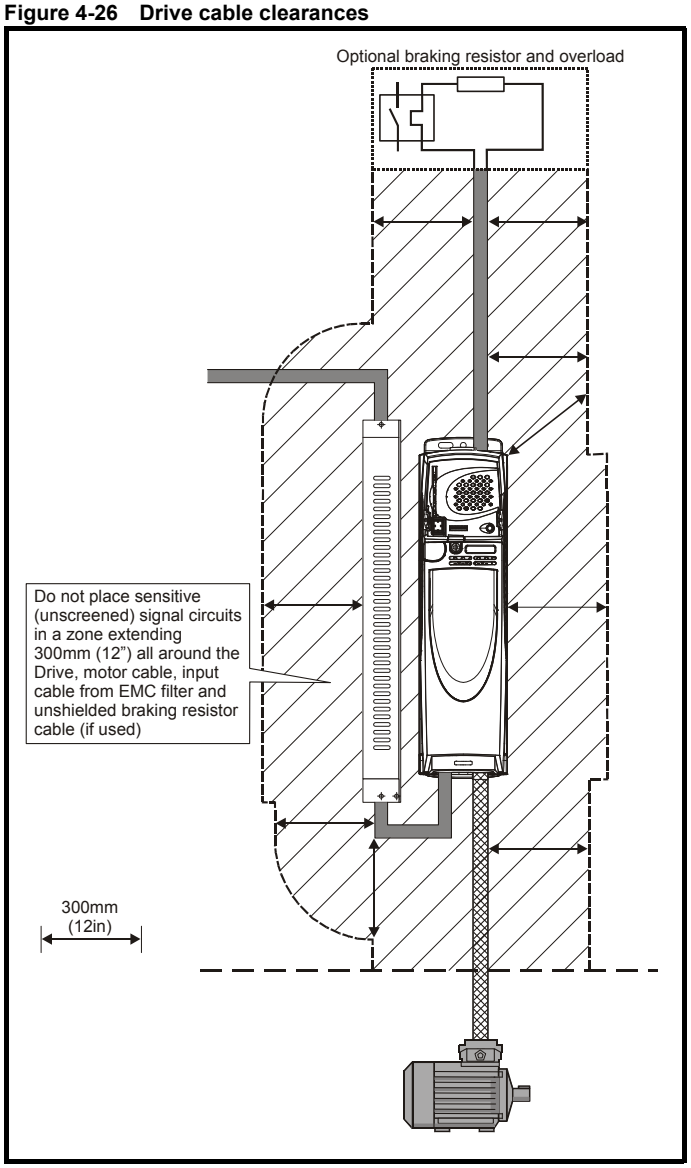

NOTE

Any signal cables which are carried inside the motor cable (i.e. motor thermistor, motor brake) will pick up large pulse currents via the cable capacitance. The shield of these signal cables must be connected to ground close to the motor cable, to avoid this noise current spreading through the control system.

Feedback device cable shielding

Shielding considerations are important for PWM drive installations due to the high voltages and currents present in the output (motor) circuit with a very wide frequency spectrum, typically from 0 to 20 MHz.

The following guidance is divided into two parts:

1. Ensuring correct transfer of data without disturbance from electrical noise originating either within the drive or from outside.
2. Additional measures to prevent unwanted emission of radio frequency noise. These are optional and only required where the installation is subject to specific requirements for radio frequency emission control.

To ensure correct transfer of data, observe the following:

Resolver connections:

- Use a cable with an overall shield and twisted pairs for the resolver signals
- Connect the cable shield to the drive 0V connection by the shortest possible link ("pigtail")
- It is generally preferable not to connect the cable shield to the resolver. However in cases where there is an exceptional level of common-mode noise voltage present on the resolver body, it may be helpful to connect the shield there. If this is done then it becomes essential to ensure the absolute minimum length of "pigtails" at both shield connections, and possibly to clamp the cable shield directly to the resolver body and to the drive grounding bracket.
- The cable should preferably not be interrupted. If interruptions are unavoidable, ensure the absolute minimum length of "pigtail" in the shield connections at each interruption.

Encoder connections:

- Use a cable with the correct impedance
- Use a cable with individually shielded twisted pairs
- Connect the cable shields to 0V at both the drive and the encoder, using the shortest possible links ("pigtails")
- The cable should preferably not be interrupted. If interruptions are unavoidable, ensure the absolute minimum length of "pigtail" in the shield connections at each interruption. Preferably, use a connection method which provides substantial metallic clamps for the cable shield terminations.

The above applies where the encoder body is isolated from the motor and where the encoder circuit is isolated from the encoder body. Where there is no isolation between the encoder circuits and the motor body, and in case of doubt, the following additional requirement must be observed. This gives the best possible noise immunity.

- The shields must be directly clamped to the encoder body (no pigtail) and to the drive grounding bracket. This may be achieved by clamping of the individual shields or by providing an additional overall shield which is clamped.

NOTE

The recommendations of the encoder manufacturer must also be adhered to for the encoder connections.

NOTE

In order to guarantee maximum noise immunity for any application double shielded cable as shown should be used.

In some cases single shielding of each pair of differential signals cables, or a single overall shield with individual shield on the thermistor connections is sufficient. In these cases all the shields should be connected to ground and 0V at both ends.

If the 0V is required to be left floating a cable with individual shields and an overall shield must be used.

Figure 4-27 and Figure 4-28 illustrate the preferred construction of cable and the method of clamping. The outer sheath of the cable should be stripped back enough to allow the clamp to be installed. The shield must not be broken or opened at this point. The clamps should be installed close to the drive or feedback device, with the ground connections made to a ground plate or similar metallic ground surface.

Figure 4-27 Feedback cable, twisted pair

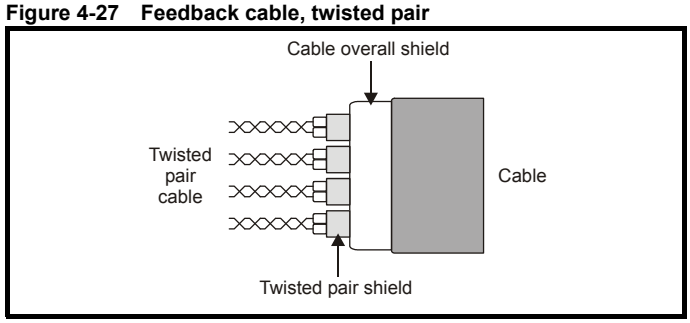

Figure 4-28 Feedback cable connections

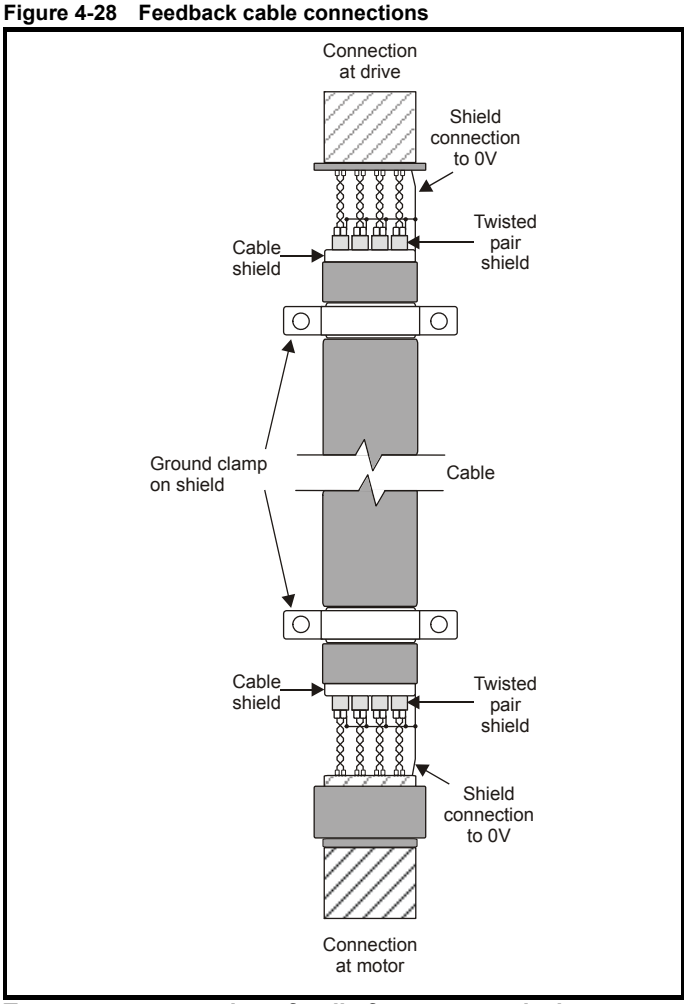

To ensure suppression of radio frequency emission, observe the following:

- Use a cable with an overall shield
- Clamp the overall shield to grounded metallic surfaces at both the encoder and the drive, as illustrated in Figure 4-28

4.11.4 Compliance with EN 61800-3:2004 (standard for Power Drive Systems)

Meeting the requirements of this standard depends on the environment that the drive is intended to operate in, as follows:

Operation in the first environment

Observe the guidelines given in section 4.11.5 *Compliance with generic emission standards* on page 87. An external EMC filter will always be required.

CAUTION

This is a product of the restricted distribution class according to IEC 61800-3

In a residential environment this product may cause radio interference in which case the user may be required to take adequate measures.

Operation in the second environment

In all cases a shielded motor cable must be used, and an EMC filter is required for all Unidrive SPs with a rated input current of less than 100A.

The drive contains an in-built filter for basic emission control. In some cases feeding the motor cables (U, V and W) once through a ferrite ring can maintain compliance for longer cable lengths. The requirements of operating in the second environment are met, depending on the motor cable length for 3kHz switching frequency as stated in Table 4-14 and Table 4-15.

Table 4-14 Second environment emission compliance (size 0)

Drive size	Filter	Voltage	Motor cable length (m)		
			0 to 12	12 to 14	>14
0	In-built	200	Unrestricted	Restricted	
		400	Unrestricted		Restricted

Table 4-15 Second environment emission compliance (size 1 to 6)

Drive size	Filter	Voltage	Motor cable length (m)		
			0 to 4	4 to 10	10 to 100
1	In-built	Any	Unrestricted	Restricted	
	In-built and ferrite ring	Any	Unrestricted		Restricted
2	In-built	Any	Restricted		
	In-built and ferrite ring	Any	Unrestricted		Restricted
3	In-built	Any	Restricted		
4	In-built	Any	Restricted		
5	In-built	200 & 400	Unrestricted		
		690	Restricted		
6	In-built	Any	Unrestricted		

Key:

Restricted: EN 61800-3:2004 second environment, restricted distribution (Additional measures may be required to prevent interference)

Unrestricted: EN 61800-3:2004 second environment, unrestricted distribution

For longer motor cables, an external filter is required. Where a filter is required, follow the guidelines in section 4.11.5 *Compliance with generic emission standards* .

Where a filter is not required, follow the guidelines given in section 4.11.3 *General requirements for EMC* on page 84.

CAUTION

The second environment typically includes an industrial low-voltage power supply network which does not supply buildings used for residential purposes. Operating the drive in this environment without an external EMC filter may cause interference to nearby electronic equipment whose sensitivity has not been appreciated. The user must take remedial measures if this situation arises. If the consequences of unexpected disturbances are severe, it is recommended that the guidelines in section 4.11.5 *Compliance with generic emission standards* be adhered to.

Refer to section 12.1.24 *Electromagnetic compatibility (EMC)* on page 277 for further information on compliance with EMC standards and definitions of environments.

Detailed instructions and EMC information are given in the *EMC Data Sheet* which is available from the supplier of the drive.

4.11.5 Compliance with generic emission standards

The following information applies to frame sizes 0 to 5.

Size 6 upwards does not comply with the requirements of the generic standards for radiated emission.

Size 6 complies with the requirements for conducted emission.

Use the recommended filter and shielded motor cable. Observe the layout rules given in Figure 4-29. Ensure the AC supply and ground cables are at least 100mm from the power module and motor cable.

Figure 4-29 Supply and ground cable clearance (size 0 to 3)

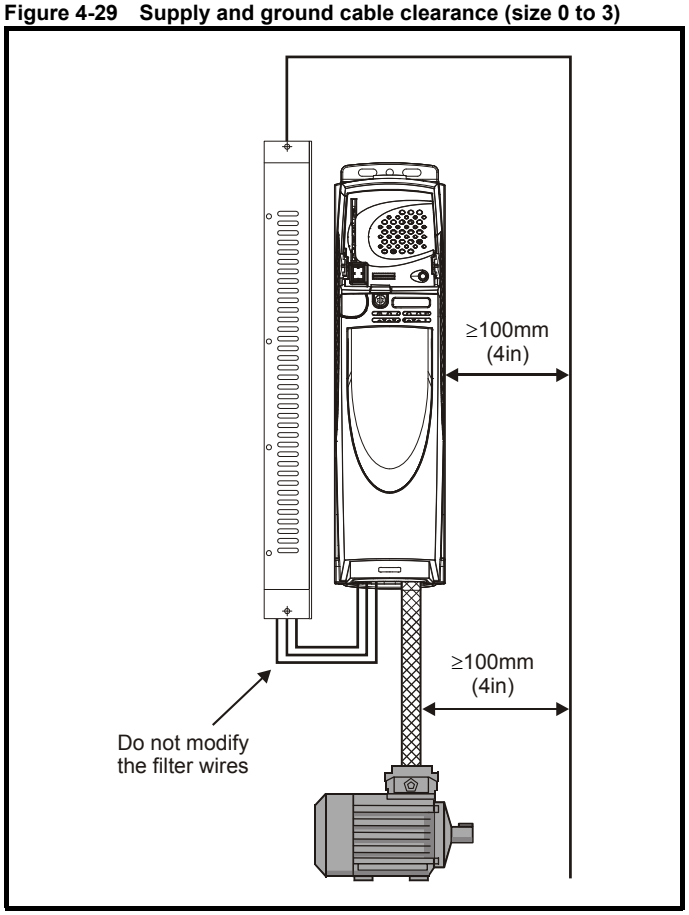

Figure 4-30 Supply and ground cable clearance (size 4 to 6)

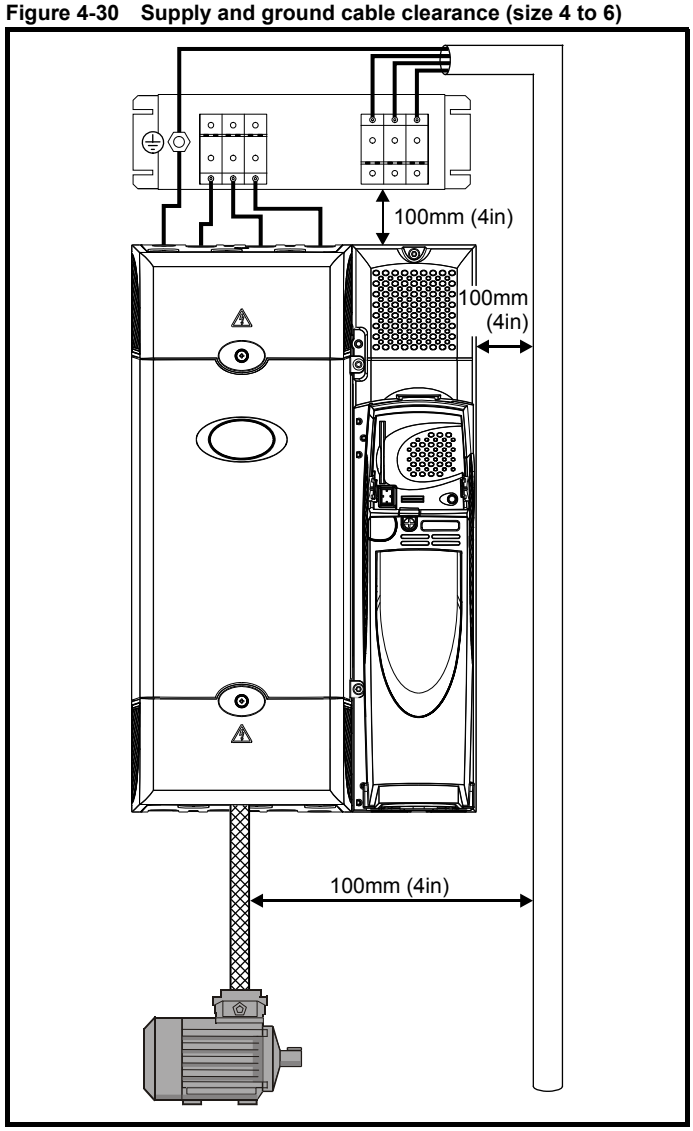

Avoid placing sensitive signal circuits in a zone 300mm (12in) all around the power module.

Figure 4-31 Sensitive signal circuit clearance

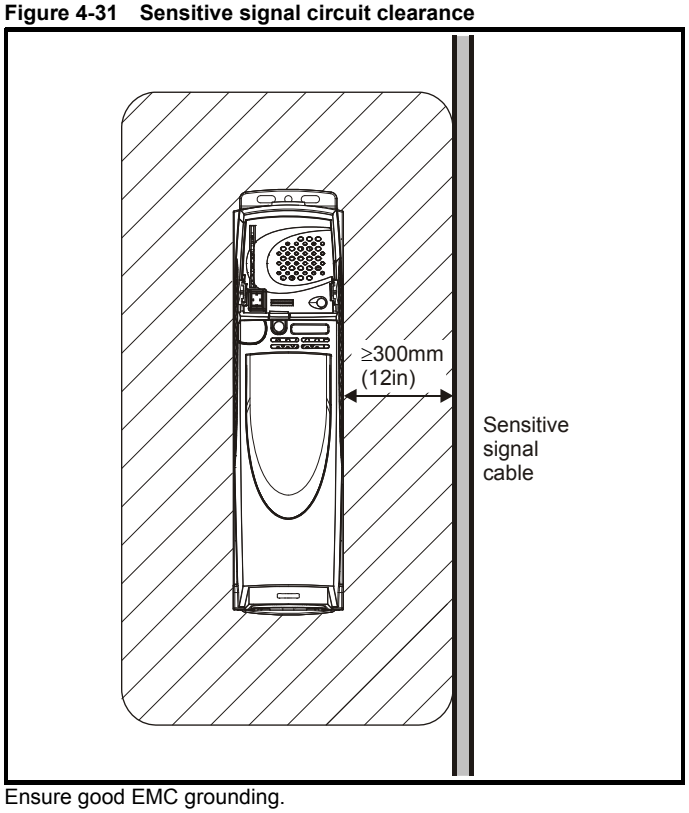

Ensure good EMC grounding.

Figure 4-32 Grounding the drive, motor cable shield and filter

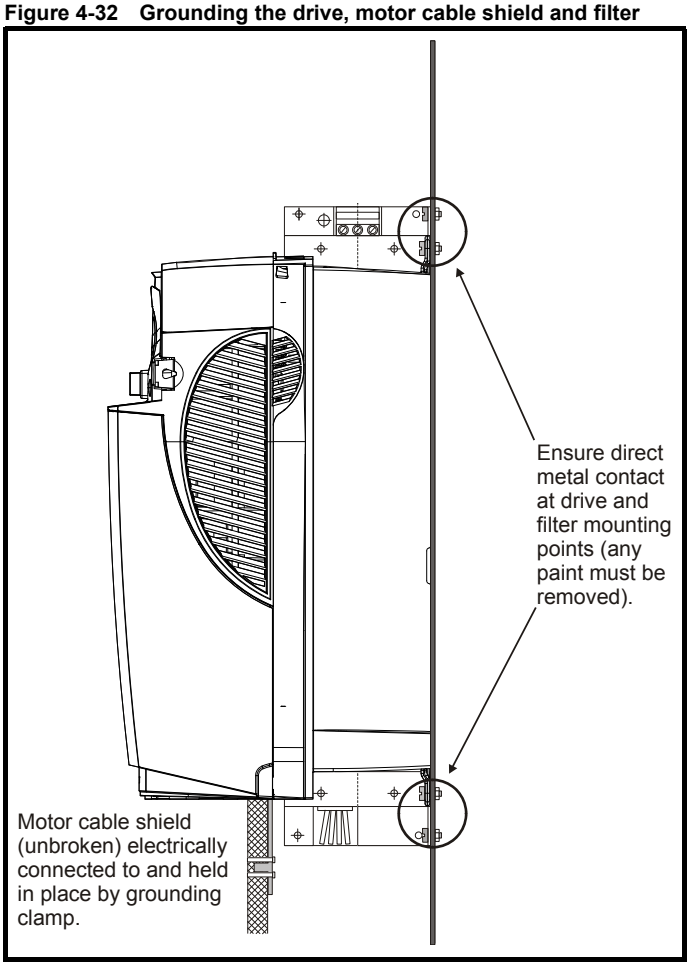

Connect the shield of the motor cable to the ground terminal of the motor frame using a link that is as short as possible and not exceeding 50mm (2in) long. A full 360° termination of the shield to the terminal housing of the motor is beneficial.

It is unimportant for EMC purposes whether the motor cable contains an internal (safety) ground core, or there is a separate external ground conductor, or grounding is through the shield alone. An internal ground core will carry a high noise current and therefore it must be terminated as close as possible to the shield termination.

Figure 4-33 Grounding the motor cable shield

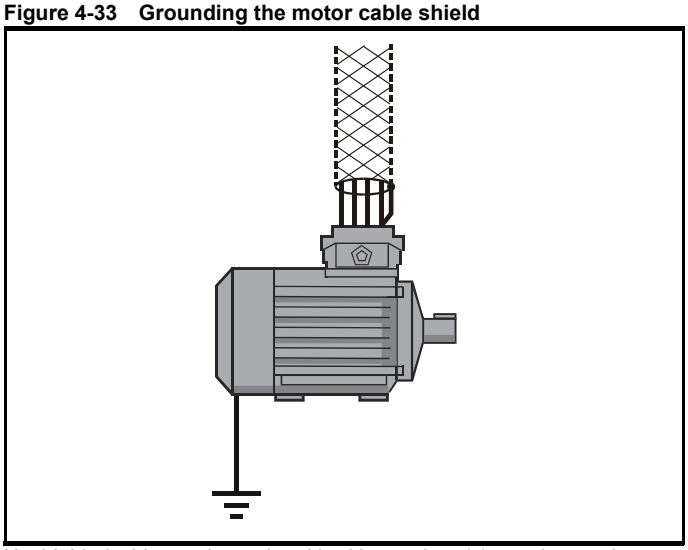

Unshielded wiring to the optional braking resistor(s) may be used, provided the wiring does not run external to the enclosure. Ensure a minimum spacing of 300mm (12in) from signal wiring and the AC supply wiring to the external EMC filter. Otherwise this wiring must be shielded.

Figure 4-34 Shielding requirements of optional external braking resistor

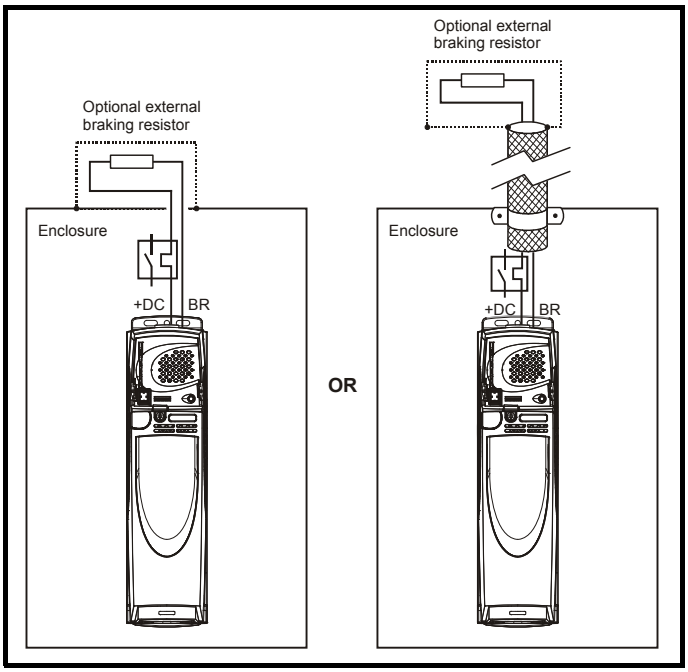

If the control wiring is to leave the enclosure, it must be shielded and the shield(s) clamped to the drive using the grounding bracket as shown in Figure 4-35. Remove the outer insulating cover of the cable to ensure the shield(s) make contact with the bracket, but keep the shield(s) intact until as close as possible to the terminals

Alternatively, wiring may be passed through a ferrite ring, part number 3225-1004.

Figure 4-35 Grounding of signal cable shields using the grounding bracket

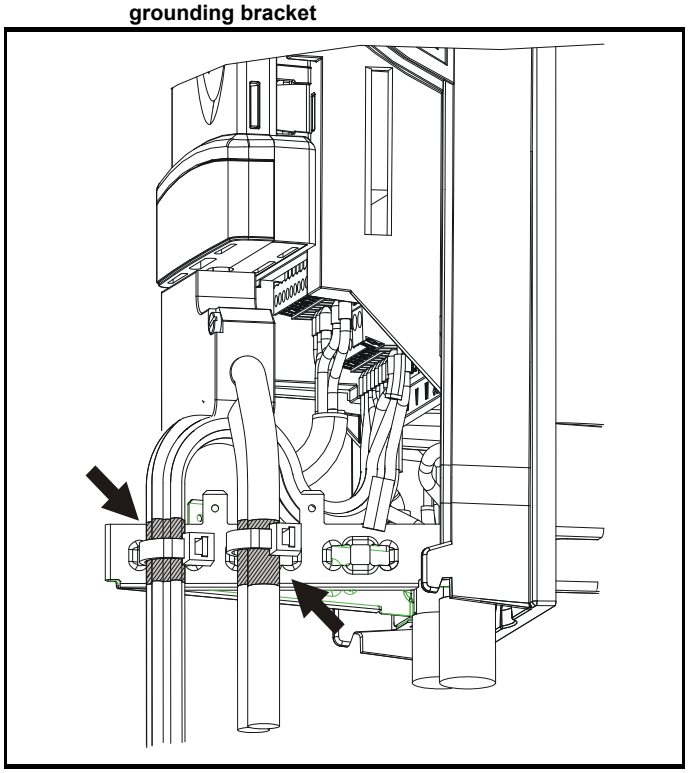

4.11.6 Variations in the EMC wiring

Interruptions to the motor cable

The motor cable should ideally be a single length of shielded or armored cable having no interruptions. In some situations it may be necessary to interrupt the cable, as in the following examples:

- Connecting the motor cable to a terminal block in the drive enclosure
- Installing a motor isolator / disconnect switch for safety when work is done on the motor

In these cases the following guidelines should be followed.

Terminal block in the enclosure

The motor cable shields should be bonded to the back-plate using uninsulated metal cable-clamps which should be positioned as close as possible to the terminal block. Keep the length of power conductors to a minimum and ensure that all sensitive equipment and circuits are at least 0.3m (12 in) away from the terminal block.

Figure 4-36 Connecting the motor cable to a terminal block in the enclosure

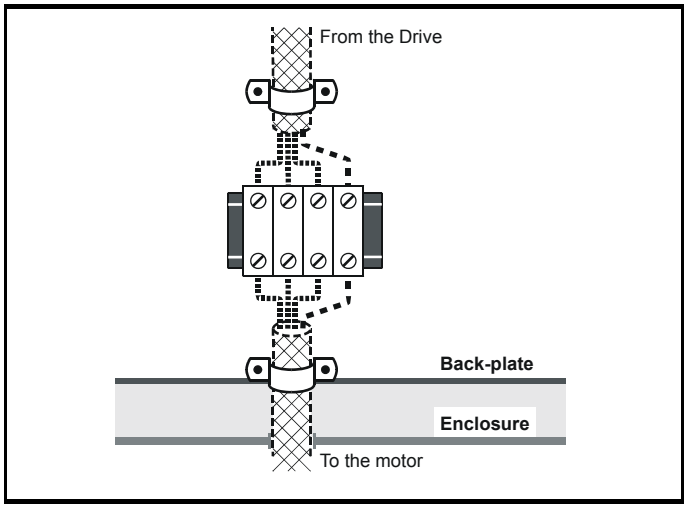

Using a motor isolator / disconnect-switch

The motor cable shields should be connected by a very short conductor having a low inductance. The use of a flat metal coupling-bar is recommended; conventional wire is not suitable.

The shields should be bonded directly to the coupling-bar using uninsulated metal cable-clamps. Keep the length of the exposed power conductors to a minimum and ensure that all sensitive equipment and circuits are at least 0.3m (12 in) away.

The coupling-bar may be grounded to a known low-impedance ground nearby, for example a large metallic structure which is connected closely to the drive ground.

Figure 4-37 Connecting the motor cable to an isolator / disconnect switch

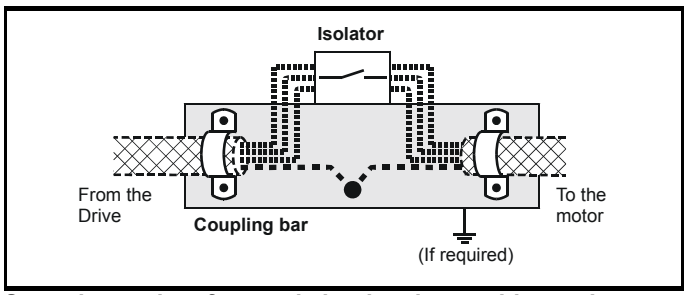

Surge immunity of control circuits - long cables and connections outside a building

The input/output ports for the control circuits are designed for general use within machines and small systems without any special precautions.

These circuits meet the requirements of EN61000-6-2 (1kV surge) provided the 0V connection is not grounded.

In applications where they may be exposed to high-energy voltage surges, some special measures may be required to prevent malfunction or damage. Surges may be caused by lightning or severe power faults in association with grounding arrangements which permit high transient voltages between nominally grounded points. This is a particular risk where the circuits extend outside the protection of a building.

As a general rule, if the circuits are to pass outside the building where the drive is located, or if cable runs within a building exceed 30m, some additional precautions are advisable. One of the following techniques should be used:

1. Galvanic isolation, i.e. do not connect the control 0V terminal to ground. Avoid loops in the control wiring, i.e. ensure every control wire is accompanied by its return (0V) wire.

2. Shielded cable with additional power ground bonding. The cable shield may be connected to ground at both ends, but in addition the ground conductors at both ends of the cable must be bonded together by a power ground cable (equipotential bonding cable) with cross-sectional area of at least 10mm^2, or 10 times the area of the signal cable shield, or to suit the electrical safety requirements of the plant. This ensures that fault or surge current passes mainly through the ground cable and not in the signal cable shield. If the building or plant has a well-designed common bonded network this precaution is not necessary.
3. Additional over-voltage suppression - for the analog and digital inputs and outputs, a zener diode network or a commercially available surge suppressor may be connected in parallel with the input circuit as shown in Figure 4-38 and Figure 4-39.

If a digital port experiences a severe surge its protective trip may operate (O.Ld1 trip code 26). For continued operation after such an event, the trip can be reset automatically by setting Pr **10.34** to 5.

Figure 4-38 Surge suppression for digital and unipolar inputs and outputs

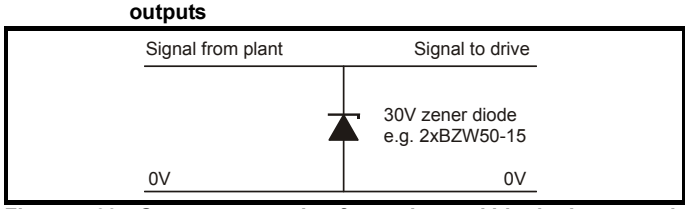

Figure 4-39 Surge suppression for analog and bipolar inputs and outputs

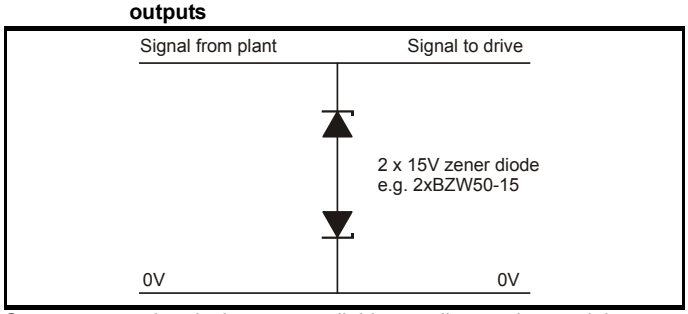

Surge suppression devices are available as rail-mounting modules, e.g. from Phoenix Contact:

Unipolar TT-UKK5-D/24 DC
Bipolar TT-UKK5-D/24 AC

These devices are not suitable for encoder signals or fast digital data networks because the capacitance of the diodes adversely affects the signal. Most encoders have galvanic isolation of the signal circuit from the motor frame, in which case no precautions are required. For data networks, follow the specific recommendations for the particular network.

4.12 Serial communications connections

The drive has a serial communications port (serial port) as standard supporting 2 wire EIA485 communications. Please see Table 4-16 for the connection details for the RJ45 connector.

Figure 4-40 Location of the RJ45 serial comms connector

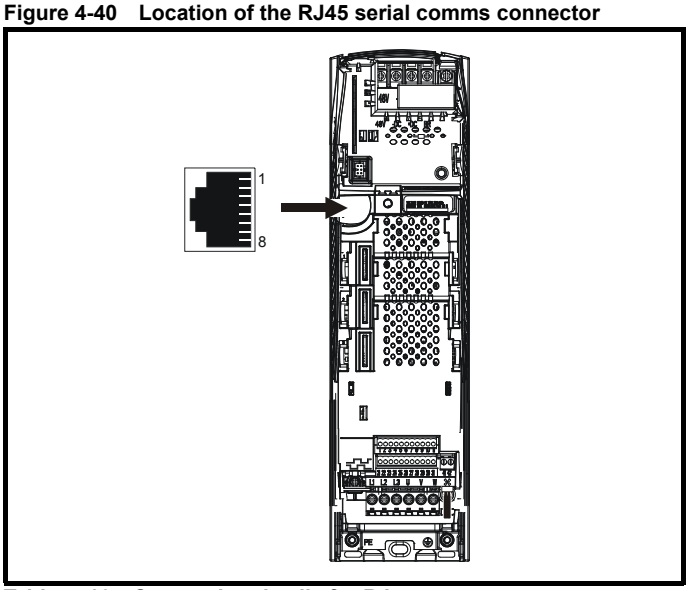

Table 4-16 Connection details for RJ45 connector

Pin	Function
1	120Ω Termination resistor
2	RX TX
3	Isolated 0V
4	+24V (100mA)
5	Isolated 0V
6	TX enable
7	RX\ TX\
8	RX\ TX\ (if termination resistors are required, link to pin 1)
Shell	Isolated 0V

The communications port applies a 2 unit load to the communications network.

Minimum number of connections are 2, 3, 7 and shield. Shielded cable must be used at all times.

4.12.1 Isolation of the serial communications port

The serial PC communications port is double insulated and meets the requirements for SELV in EN50178.

WARNING

In order to meet the requirements for SELV in IEC60950 (IT equipment) it is necessary for the control computer to be grounded. Alternatively, when a lap-top or similar device is used which has no provision for grounding, an isolation device must be incorporated in the communications lead.

An isolated serial communications lead has been designed to connect the drive to IT equipment (such as lap-top computers), and is available from the supplier of the drive. See below for details:

Table 4-17 Isolated serial comms lead details

Part number	Description
4500-0087	CT EIA232 Comms cable
4500-0096	CT USB Comms cable

The “isolated serial communications” lead has reinforced insulation as defined in IEC60950 for altitudes up to 3,000m.

NOTE

When using the CT EIA232 Comms cable the available baud rate is limited to 19.2k baud.

4.12.2 Multi-drop network

The drive can be used on a 2 wire EIA485 multi-drop network using the drive's serial communications port when the following guidelines are adhered to.

Connections

The network should be a daisy chain arrangement and not a star, although short stubs to the drive are allowed.

The minimum connections are pins 2 (RX TX), 3 (isolated 0V), 7 (RX\ TX\) and the shield.

Pin 4 (+24V) on each drive can be connected together but there is no power sharing mechanism between drives and therefore the maximum power available is the same as a single drive. (If pin 4 is not linked to the other drives on the network and has an individual load then the maximum power can be taken from pin 4 of each drive.)

Termination resistors

If a drive is on the end of the network chain then pins 1 and 8 should be linked together. This will connect an internal 120Ω termination resistor between RXTX and RX\TX\. (If the end unit is not a drive or the user wishes to use their own termination resistor, a 120Ω termination resistor should be connected between RXTX and RX\TX\ at the end unit.)

If the host is connected to a single drive then termination resistors should not be used unless the baud rate is high.

CT Comms Cable

The CT Comms Cable can be used on a multi-drop network but should only be used occasionally for diagnostic and set up purposes. The network must also be made up entirely of Unidrive SPs.

If the CT Comms Cable is to be used, then pin 6 (TX enable) should be connected on all drives and pin 4 (+24V) should be linked to at least 1 drive to supply power to the converter in the cable.

Only one CT Comms Cable can be used on a network.

4.13 Control connections

4.13.1 General

Table 4-18 The control connections consist of:

Function	Qty	Control parameters available	Terminal number
Differential analog input	1	Destination, offset, offset trim, invert, scaling	5,6
Single ended analog input	2	Mode, offset, scaling, invert, destination	7,8
Analog output	2	Source, mode, scaling,	9,10
Digital input	3	Destination, invert, logic select	27, 28, 29
Digital input / output	3	Input / output mode select, destination / source, invert, logic select	24, 25, 26
Relay	1	Source, invert	41,42
Drive enable (SAFE TORQUE OFF)	1		31
+10V User output	1		4
+24V User output	1	Source, invert	22
0V common	6		1, 3, 11, 21, 23, 30
+24V External input	1		2

Key:

Destination parameter: indicates the parameter which is being controlled by the terminal / function

Source parameter: indicates the parameter being output by the terminal

Mode parameter: analog - indicates the mode of operation of the terminal, i.e. voltage 0-10V, current 4-20mA etc.

digital - indicates the mode of operation of the terminal, i.e. positive / negative logic (the Drive Enable terminal is fixed in positive logic), open collector.

All analog terminal functions can be programmed in menu 7.

All digital terminal functions (including the relay) can be programmed in menu 8.

The setting of Pr **1.14** and Pr **6.04** can cause the function of digital inputs T25 to T29 to change. For more information, please refer to section 11.21.1 *Reference modes* on page 256 and section 11.21.7 *Start / stop logic modes* on page 261.



The control circuits are isolated from the power circuits in the drive by basic insulation (single insulation) only. The installer must ensure that the external control circuits are insulated from human contact by at least one layer of insulation (supplementary insulation) rated for use at the AC supply voltage.



If the control circuits are to be connected to other circuits classified as Safety Extra Low Voltage (SELV) (e.g. to a personal computer), an additional isolating barrier must be included in order to maintain the SELV classification.



If any of the digital inputs or outputs (including the drive enable input) are connected in parallel with an inductive load (i.e. contactor or motor brake) then suitable suppression (i.e. diode or varistor) should be used on the coil of the load. If no suppression is used then over voltage spikes can cause damage to the digital inputs and outputs on the drive.



Ensure the logic sense is correct for the control circuit to be used. Incorrect logic sense could cause the motor to be started unexpectedly.
Positive logic is the default state for Unidrive SP.

NOTE

Any signal cables which are carried inside the motor cable (i.e. motor thermistor, motor brake) will pick up large pulse currents via the cable capacitance. The shield of these signal cables must be connected to ground close to the point of exit of the motor cable, to avoid this noise current spreading through the control system.

NOTE

The SAFE TORQUE OFF drive enable terminal is a positive logic input only. It is not affected by the setting of Pr **8.29** *Positive logic select*.

NOTE

The common 0V from analog signals should, wherever possible, not be connected to the same 0V terminal as the common 0V from digital signals. Terminals 3 and 11 should be used for connecting the 0V common of analog signals and terminals 21, 23 and 30 for digital signals. This is to prevent small voltage drops in the terminal connections causing inaccuracies in the analog signals.

Figure 4-41 Default terminal functions

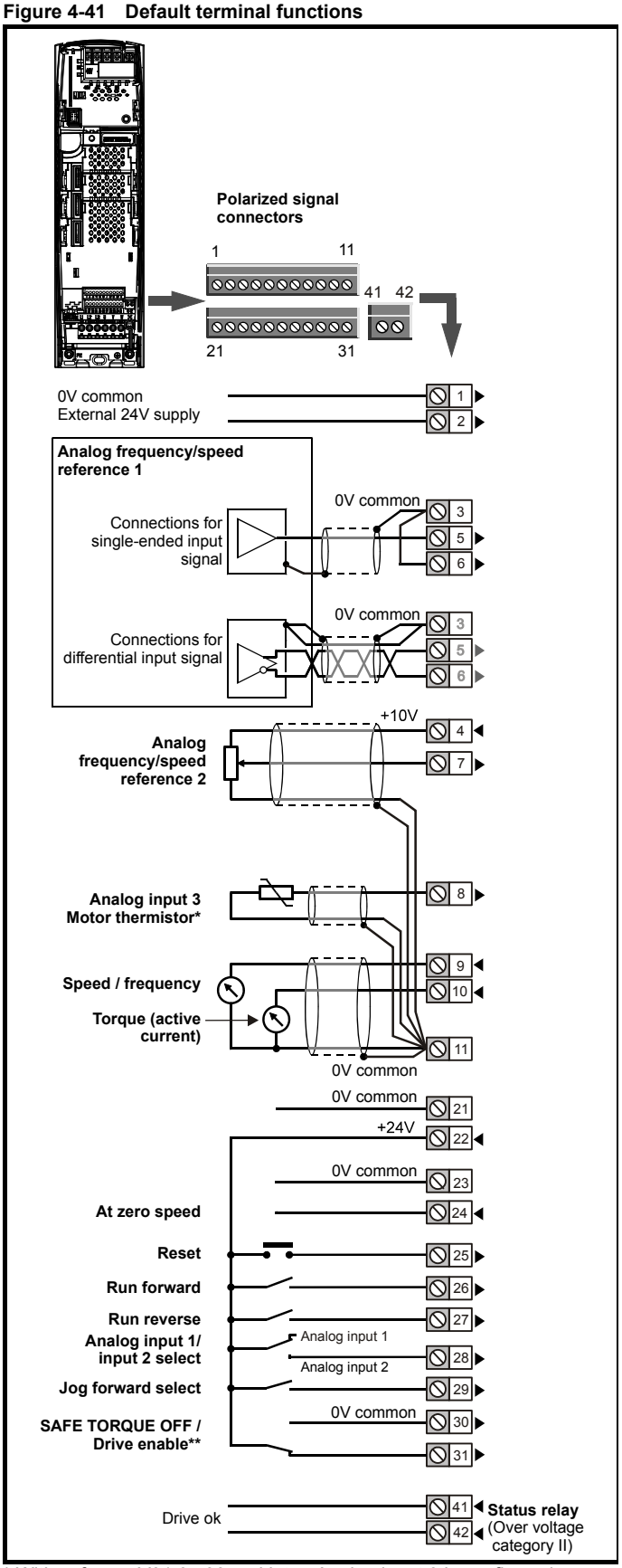

* With software V01.07.00 and later, Analog input 3 is configured as a motor thermistor input. With software V01.06.02 and earlier, Analog input 3 has no default function. Refer to *Analog input 3* on page 93.

**The SAFE TORQUE OFF / Drive enable terminal is a positive logic input only.

4.13.2 Control terminal specification

1	0V common
Function	**Common connection for all external devices**

2	+24V external input
Function	**To supply the control circuit without providing a supply to the power stage**
Nominal voltage	+24.0Vdc
Minimum continuous operating voltage	+19.2Vdc
Maximum continuous operating voltage	+30.0Vdc
Minimum start-up voltage	21.6Vdc
Recommended power supply	60W 24Vdc nominal
Recommended fuse	3A, 50Vdc

3	0V common
Function	**Common connection for all external devices**

4	+10V user output
Function	**Supply for external analog devices**
Voltage tolerance	±1%
Nominal output current	10mA
Protection	Current limit and trip @ 30mA

	Precision reference Analog input 1
5	Non-inverting input
6	Inverting input
Default function	**Frequency/speed reference**
Type of input	Bipolar differential analog (For single-ended use, connect terminal 6 to terminal 3)
Full scale voltage range	±9.8V ±1%
Absolute maximum voltage range	±36V relative to 0V
Working common mode voltage range	±13V relative to 0V
Input resistance	100kΩ ±1%
Resolution	16-bit plus sign (as speed reference)
Monotonic	Yes (including 0V)
Dead band	None (including 0V)
Jumps	None (including 0V)
Maximum offset	700µV
Maximum non linearity	0.3% of input
Maximum gain asymmetry	0.5%
Input filter bandwidth single pole	~1kHz
Sampling period	250µs with destinations as Pr **1.36**, Pr **1.37** or Pr **3.22** in closed loop vector or servo mode. 4ms for open loop mode and all other destinations in closed loop vector or servo mode.

7	Analog input 2
Default function	**Frequency/speed reference**
Type of input	Bipolar single-ended analog voltage or unipolar current
Mode controlled by...	Pr **7.11**
Operating in Voltage mode	
Full scale voltage range	±9.8V ±3%
Maximum offset	±30mV
Absolute maximum voltage range	±36V relative to 0V
Input resistance	>100kΩ
Operating in current mode	
Current ranges	0 to 20mA ±5%, 20 to 0mA ±5%, 4 to 20mA ±5%, 20 to 4mA ±5%
Maximum offset	250µA
Absolute maximum voltage (reverse bias)	–36V max
Absolute maximum current	+70mA
Equivalent input resistance	≤200Ω at 20mA
Common to all modes	
Resolution	10 bit + sign
Sample period	250µs when configured as voltage input with destinations as Pr **1.36**, Pr **1.37**, Pr **3.22** or Pr **4.08** in closed loop vector or servo mode. 4ms for open loop mode, all other destinations in closed loop vector or servo mode, or any destination when configured as a current input.

8	Analog input 3
Default function	**V01.07.00 and later: Motor thermistor input (PTC)** **V01.06.02 and earlier: Not configured**
Type of input	Bipolar single-ended analog voltage, unipolar current or motor thermistor input
Mode controlled by...	Pr **7.15**
Operating in Voltage mode (default)	
Voltage range	±9.8V ±3%
Maximum offset	±30mV
Absolute maximum voltage range	±36V relative to 0V
Input resistance	>100kΩ
Operating in current mode	
Current ranges	0 to 20mA ±5%, 20 to 0mA ±5%, 4 to 20mA ±5%, 20 to 4mA ±5%
Maximum offset	250µA
Absolute maximum voltage (reverse bias)	–36V max
Absolute maximum current	+70mA
Equivalent input resistance	≤200Ω at 20mA
Operating in thermistor input mode	
Internal pull-up voltage	<5V
Trip threshold resistance	3.3kΩ ±10%
Reset resistance	1.8kΩ ±10%
Short-circuit detection resistance	50Ω ±40%
Common to all modes	
Resolution	10 bit + sign
Sample period	250µs when configured as voltage input with destinations as Pr **1.36**, Pr **1.37**, Pr **3.22** or Pr **4.08** in closed loop vector or servo mode. 4ms for open loop mode, all other destinations in closed loop vector or servo mode, or any destination when configured as a current input.

T8 analog input 3 has a parallel connection to terminal 15 of the drive encoder connector.

9	Analog output 1
10	Analog output 2
Terminal 9 default function	**OL> Motor FREQUENCY output signal** **CL> SPEED output signal**
Terminal 10 default function	**Motor active current**
Type of output	Bipolar single-ended analog voltage or unipolar single ended current
Mode controlled by...	Pr **7.21** and Pr **7.24**
Operating in Voltage mode (default)	
Voltage range	±10V ±3%
Maximum offset	±200mV
Maximum output current	±35mA
Load resistance	1kΩ min
Protection	35mA max. Short circuit protection
Operating in current mode	
Current ranges	0 to 20mA ±5% 4 to 20mA ±5%
Maximum offset	600µA
Maximum open circuit voltage	+15V
Maximum load resistance	600Ω
Common to all modes	
Resolution	10-bit (plus sign in voltage mode)
Update period	250µs when configured as a high speed output with sources as Pr **4.02**, Pr **4.17** in all modes or Pr **3.02**, Pr **5.03** in closed loop vector or servo mode. 4ms when configured as any other type of output or with all other sources.

11	0V common
Function	**Common connection for all external devices**

21	0V common
Function	**Common connection for all external devices**

22	+24V user output (selectable)
Terminal 22 default function	**+24V user output**
Programmability	Can be switched on or off to act as a fourth digital output (positive logic only) by setting the source Pr **8.28** and source invert Pr **8.18**
Nominal output current	200mA (including all digital I/O)
Maximum output current	240mA (including all digital I/O)
Protection	Current limit and trip

23	0V common
Function	**Common connection for all external devices**

24	Digital I/O 1
25	Digital I/O 2
26	Digital I/O 3

Terminal 24 default function	**AT ZERO SPEED output**
Terminal 25 default function	**DRIVE RESET input**
Terminal 26 default function	**RUN FORWARD input**
Type	Positive or negative logic digital inputs, positive or negative logic push-pull outputs or open collector outputs
Input / output mode controlled by...	Pr **8.31**, Pr **8.32** and Pr **8.33**
Operating as an input	
Logic mode controlled by...	Pr **8.29**
Absolute maximum applied voltage range	±30V
Impedance	6kΩ
Input thresholds	10.0V ±0.8V
Operating as an output	
Open collector outputs selected	Pr **8.30**
Nominal maximum output current	200mA (total including terminal 22)
Maximum output current	240mA (total including terminal 22)
Common to all modes	
Voltage range	0V to +24V
Sample / Update period	250µs when configured as an input with destinations as Pr **6.35** or Pr **6.36**. 600µs when configured as an input with destination as Pr **6.29**. 4ms in all other cases.

27	Digital Input 4
28	Digital Input 5
29	Digital Input 6

Terminal 27 default function	**RUN REVERSE input**
Terminal 28 default function	**Analog INPUT 1 / INPUT 2 select**
Terminal 29 default function	**JOG SELECT input**
Type	Negative or positive logic digital inputs
Logic mode controlled by...	Pr **8.29**
Voltage range	0V to +24V
Absolute maximum applied voltage range	±30V
Impedance	6kΩ
Input thresholds	10.0V ±0.8V
Sample / Update period	250µs with destinations as Pr **6.35** or Pr **6.36**. 600µs with destination as Pr **6.29**. 4ms in all other cases.

30	0V common
Function	**Common connection for all external devices**

Refer to section 4.16 *SAFE TORQUE OFF* on page 99 for further information.

31	SAFE TORQUE OFF function (drive enable)
Type	Positive logic only digital input
Voltage range	0V to +24V
Absolute maximum applied voltage	±30V
LogicThreshold	15.5V ±2.5V
Low state maximum voltage for SIL3 and EN954-1 category 3	2V (or open-circuit)
Response time	Nominal: 8ms Maximum: 20ms

SAFE TORQUE OFF function has been approved by BGIA as meeting the requirements of the following standards, for the prevention of unexpected starting of the drive:

EN 61800-5-2:2007 SIL 3
EN ISO 13849-1:2006 PL e
EN 954-1:1997 Category 3

The SAFE TORQUE OFF function may be used in a safety-related application in preventing the drive from generating torque in the motor to a high level of integrity. The system designer is responsible for ensuring that the complete system is safe and designed correctly according to the relevant safety standards.

41 42	Relay contacts
Default function	**Drive OK indicator**
Contact voltage rating	240Vac, Installation over-voltage category II
Contact maximum current rating	2A AC 240V 4A DC 30V resistive load 0.5A DC 30V inductive load (L/R = 40ms)
Contact minimum recommended rating	12V 100mA
Contact type	Normally open
Default contact condition	Closed when power applied and drive OK
Update period	4ms

WARNING A fuse or other over-current protection should be installed to the relay circuit.

4.14 Encoder connections

4.14.1 Location of encoder connector (size 0)

Before using the encoder connector on size 0 for the first time, the break-out need removing as shown in Figure 4-42.

Figure 4-42 Access to encoder connections

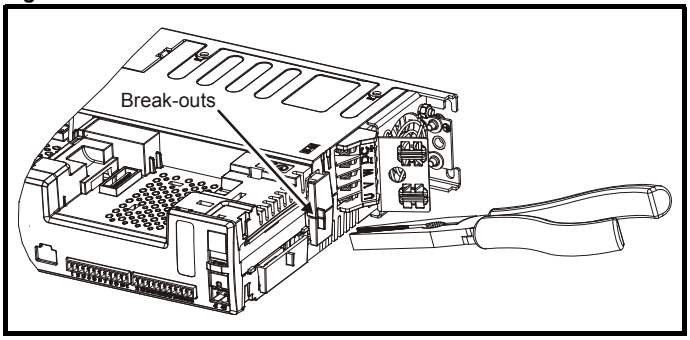

WARNING After removing the break-out, ensure that the ground tab is connected to ground. This will connect 0V of the drive to ground. This is required to enable the drive to meet IP20 when the break-out is removed.

NOTE

Do not remove the break-out if the encoder connection is not required.

Figure 4-43 Location of encoder connector (size 0)

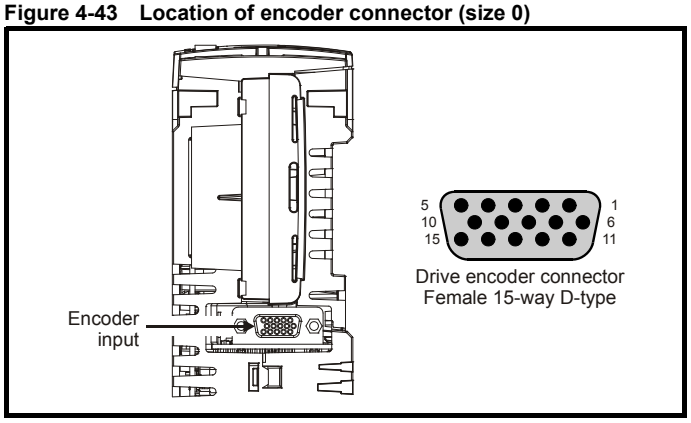

Figure 4-44 Connecting the encoder ground tab to the EMC bracket

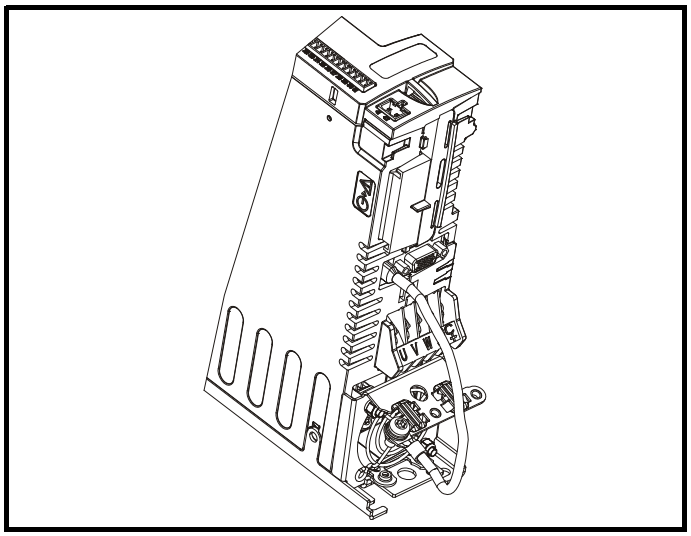

NOTE

The size of the connecting cable between the encoder ground tab and the EMC bracket should be equal to the input cable.

4.14.2 Location of encoder connector (size 1 to 6)

Figure 4-45 Location of encoder connector

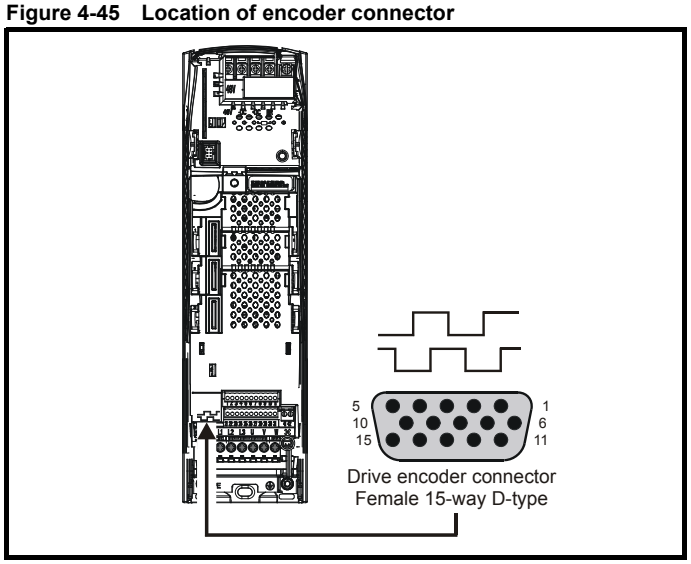

4.14.3 Encoder types

Table 4-19 Encoder types

Setting of Pr 3.38	Description
Ab (0)	Quadrature incremental encoder with or without marker pulse
Fd (1)	Incremental encoder with frequency pulses and direction, with or without marker pulse
Fr (2)	Incremental encoder with forward pulses and reverse pulses, with or without marker pulse
Ab.SErVO (3)	Quadrature incremental encoder with UVW commutation signals, with or without marker pulse Encoder with UVW commutation signals only (Pr **3.34** set to zero)*
Fd.SErVO (4)	Incremental encoder with frequency pulses and direction with commutation signals**, with or without marker pulse
Fr.SErVO (5)	Incremental encoder with forward pulses and reverse pulses with commutation signals**, with or without marker pulse
SC (6)	SinCos encoder without serial communications
SC.HiPEr (7)	Absolute SinCos encoder with HiperFace serial communications protocol (Stegmann)
EndAt (8)	Absolute EndAt serial communications encoder (Heidenhain)
SC.EndAt (9)	Absolute SinCos encoder with EnDat serial communications protocol (Heidenhain)
SSI (10)	Absolute SSI only encoder
SC.SSI (11)	Absolute SinCos encoder with SSI

* This feedback device provides very low resolution feedback and should not be used for applications requiring a high level of performance

** The U, V & W commutation signals are required with an incremental type encoder when used with a servo motor. The UVW commutation signals are used to define the motor position during the first 120° electrical rotation after the drive is powered-up or the encoder is initialized.

4.14.4 Encoder connection details

Table 4-20 Drive encoder connector details

Terminal	Setting of Pr 3.38											
	Ab (0)	**Fd** (1)	**Fr** (2)	**Ab.SErVO** (3)	**Fd.SErVO** (4)	**Fr.SErVO** (5)	**SC** (6)	**SC.HiPEr** (7)	**EndAt** (8)	**SC.EndAt** (9)	**SSI** (10)	**SC.SSI** (11)
1	A	F	F	A	F	F	Cos			Cos		Cos
2	A\	F\	F\	A\	F\	F\	Cosref			Cosref		Cosref
3	B	D	R	B	D	R	Sin			Sin		Sin
4	B\	D\	R\	B\	D\	R\	Sinref			Sinref		Sinref
5	Z*							Encoder input - Data (input/output)				
6	Z*							Encoder input - Data\ (input/output)				
7	Simulated encoder Aout, Fout**			U			Simulated encoder Aout, Fout**					
8	Simulated encoder Aout\, Fout**			U\			Simulated encoder Aout\, Fout**					
9	Simulated encoder Bout, Dout**			V			Simulated encoder Bout, Dout**					
10	Simulated encoder Bout\, Dout**			V\			Simulated encoder Bout\, Dout**					
11				W					Encoder input - Clock (output)			
12				W\					Encoder input - Clock\ (output)			
13	+V***											
14	0V common											
15	th****											

* Marker pulse is optional - this signal is only available for drive firmware version 01.16.00 and above.

** Simulated encoder output only available in open-loop

*** The encoder supply is selectable through parameter configuration to 5Vdc, 8Vdc and 15Vdc

**** Terminal 15 is a parallel connection to T8 analog input 3. If this is to be used as a thermistor input, ensure that Pr **7.15** is set to 'th.sc' (7), 'th' (8) or 'th.diSP' (9).

NOTE

SSI encoders typically have maximum baud rate of 500kBaud. When a SSI only encoder is used for speed feedback with a closed loop vector or servo motor, a large speed feedback filter (Pr **3.42**) is required due to the time taken for the position information to be transferred from the encoder into the drive. The addition of this filter means that SSI only encoders are not suitable for speed feedback in dynamic or high-speed applications.

4.14.5 Specifications

Feedback device connections

Ab, Fd, Fr, Ab.SErVO, Fd.SErVO and Fr.SErVO encoders

1	**Channel A, Frequency or Forward inputs**
2	**Channel A\, Frequency\ or Forward\ inputs**
3	**Channel B, Direction or Reverse inputs**
4	**Channel B\, Direction\ or Reverse\ inputs**

Type	EIA 485 differential receivers
Maximum input frequency	V01.06.01 and later: 500kHz V01.06.00 and earlier: 410kHz
Line loading	<2 unit loads
Line termination components	120Ω (switchable)
Working common mode range	+12V to –7V
Absolute maximum applied voltage relative to 0V	±25V
Absolute maximum applied differential voltage	±25V

5	**Marker pulse channel Z**
6	**Marker pulse channel Z**
7	**Phase channel U**
8	**Phase channel U**
9	**Phase channel V**
10	**Phase channel V**
11	**Phase channel W**
12	**Phase channel W**

Type	EIA 485 differential receivers
Maximum input frequency	512kHz
Line loading	32 unit loads (for terminals 5 and 6) 1 unit load (for terminals 7 to 12)
Line termination components	120Ω (switchable for terminals 5 and 6, always in circuit for terminals 7 to 12)
Working common mode range	+12V to –7V
Absolute maximum applied voltage relative to 0V	+14V to -9V
Absolute maximum applied differential voltage	+14V to -9V

SC, SC.HiPEr, EndAt, SC.EndAt, SSI and SC.SSI encoders

1	**Channel Cos***
2	**Channel Cosref***
3	**Channel Sin***
4	**Channel Sinref***

Type	Differential voltage
Maximum Signal level	1.25V peak to peak (sin with regard to sinref and cos with regard to cosref)
Maximum input frequency	See Table 4-21
Maximum applied differential voltage and common mode voltage range	±4V

For the SinCos encoder to be compatible with Unidrive SP, the output signals from the encoder must be a 1V peak to peak differential voltage (across Sin to Sinref and Cos to Cosref).

The majority of encoders have a DC offset on all signals. Stegmann encoders typically have a 2.5Vdc offset. The Sinref and Cosref are a flat DC level at 2.5Vdc and the Cos and Sin signals have a 1V peak to peak waveform biased at 2.5Vdc.

Encoders are available which have a 1V peak to peak voltage on Sin, Sinref, Cos and Cosref. This results in a 2V peak to peak voltage seen at the drive's encoder terminals. It is not recommended that encoders of this type are used with Unidrive SP, and that the encoder feedback signals should meet the above parameters (1V peak to peak).

Resolution: The sinewave frequency can be up to 500kHz but the resolution is reduced at high frequency. Table 4-21 shows the number of bits of interpolated information at different frequencies and with different voltage levels at the drive encoder port. The total resolution in bits per revolution is the ELPR plus the number of bits of interpolated information. Although it is possible to obtain 11 bits of interpolation information, the nominal design value is 10 bits.

* Not used with EndAt and SSI communications only encoders.

5	**Marker pulse channel Z**
6	**Marker pulse channel Z**

Type	EIA 485 differential receivers
Maximum input frequency	512kHz
Line loading	32 unit loads
Line termination components	120Ω (switchable)
Working common mode range	+12V to –7V
Absolute maximum applied voltage relative to 0V	+14V to -9V
Absolute maximum applied differential voltage	+14V to -9V

NOTE

This signal is available from drive firmware version 01.16.00 and above.

Table 4-21 Feedback resolution based on frequency and voltage level

Volt/Freq	1kHz	5kHz	50kHz	100kHz	200kHz	500kHz
1.2	11	11	10	10	9	8
1.0	11	11	10	9	9	7
0.8	10	10	10	9	8	7
0.6	10	10	9	9	8	7
0.4	9	9	9	8	7	6

5	**Data****
6	**Data****
11	**Clock*****
12	**Clock*****

Type	EIA 485 differential transceivers
Maximum frequency	2MHz
Line loading	32 unit loads (for terminals 5 and 6) 1 unit load (for terminals 11 and 12)
Working common mode range	+12V to –7V
Absolute maximum applied voltage relative to 0V	±14V
Absolute maximum applied differential voltage	±14V

** Not used with SC encoders.

*** Not used with SC and SC.HiPEr encoders.

Frequency slaving outputs (open loop only)

Ab, Fd, Fr, SC, SC.HiPEr, EndAt, SC.EndAt, SSI and SC.SSI encoders

7	**Frequency slaving out channel A**
8	**Frequency slaving out channel A**
9	**Frequency slaving out channel B**
10	**Frequency slaving out channel B**

Type	EIA 485 differential transceivers
Maximum output frequency	512kHz
Absolute maximum applied voltage relative to 0V	±14V
Absolute maximum applied differential voltage	±14V

Common to all Encoder types

13	**Encoder supply voltage**

Supply voltage	5.15V ±2%, 8V ±5% or 15V ±5%
Maximum output current	300mA for 5V and 8V 200mA for 15V

The voltage on terminal 13 is controlled by Pr **3.36**. The default for this parameter is 5V (0) but this can be set to 8V (1) or 15V (2). Setting the encoder voltage supply too high for the encoder could result in damage to the feedback device.

The termination resistors should be disabled if the outputs from the encoder are higher than 5V.

14	**0V common**

15	**Motor thermistor input**

This terminal is connected internally to terminal 8 of the signal connector. Connect only one of these terminals to a motor thermistor. Analog input 3 must be in thermistor mode, Pr **7.15** = th.SC (7), th (8) or th.diSP (9).

4.15 Low voltage DC mode enable and heatsink fan supply connections (size 4 to 6)

Sizes 4 to 6 require a 24V enable signal to terminal 50 and 51 of the lower terminal connector near the W phase output, to allow the drive to be used from a low voltage DC supply.

For more information regarding low voltage DC operation, see the *Low Voltage DC Mode Installation Guide*.

Figure 4-46 Location of the size 4 to 6 low voltage DC mode enable connections

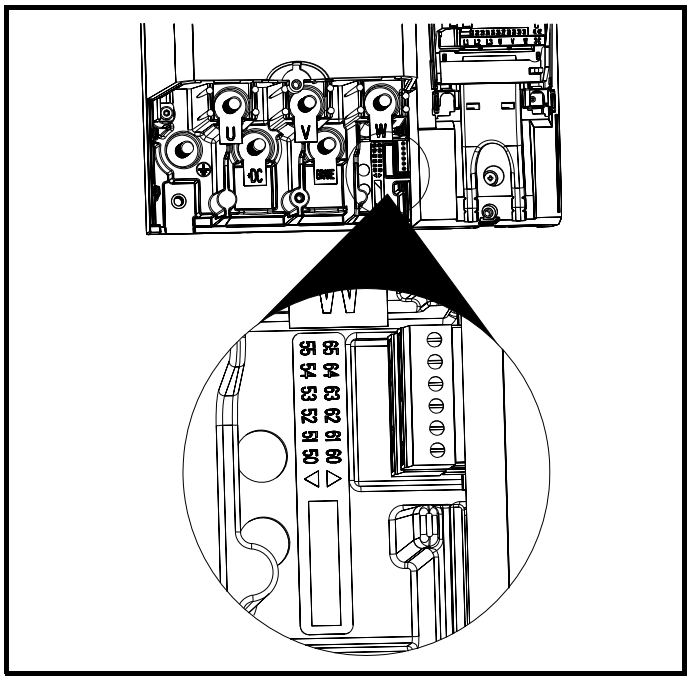

Figure 4-47 Size 4 and 5 low voltage DC mode enable connections

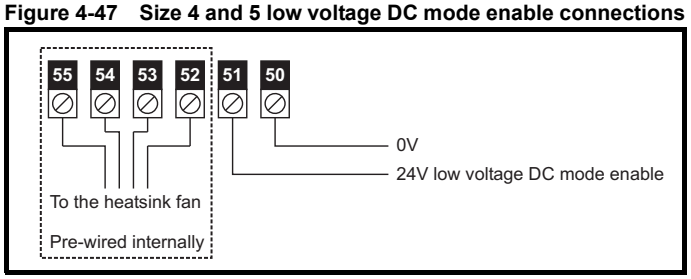

Figure 4-48 Size 6 low voltage DC mode enable connections

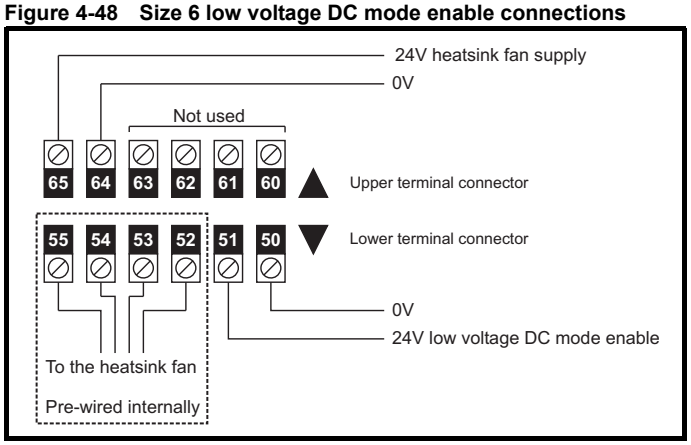

4.15.1 Low voltage DC mode enable connections (sizes 4 to 6)

50	**0V**
51	**24V low voltage DC mode enable**

Function	**To allow the drive it be used from low voltage DC supply**
Nominal voltage	24.0Vdc
Minimum continuous operating voltage	19.2Vdc
Maximum continuous operating voltage	30.0Vdc
Nominal current consumption	500mA
Recommended fuse	8A 600V AC fast acting class CC type fuse

52 **53** **54** **55**	**Heatsink fan connections**
No user connections	

4.15.2 Heatsink fan supply connections (size 6 only)

60 **61** **62** **63**	**No connection**
No user connections	

64	**0V**
65	**24V heatsink fan supply**

Function	**To provide the power supply to the heatsink mounted fan**
Nominal voltage	24Vdc
Minimum continuous operating voltage	23.5V
Maximum continuous operating voltage	27V
Current consumption	3.3A
Recommended power supply	24V, 100W, 4.5A
Recommended fuse	4A fast blow (I^2t less than $20A^2s$)

4.16 SAFE TORQUE OFF

The SAFE TORQUE OFF function provides a means for preventing the drive from generating torque in the motor, with a very high level of integrity. It is suitable for incorporation into a safety system for a machine. It is also suitable for use as a conventional drive enable input.

The SAFE TORQUE OFF function makes use of the special property of an inverter drive with an induction motor, which is that torque cannot be generated without the continuous correct active behavior of the inverter circuit. All credible faults in the inverter power circuit cause a loss of torque generation.

The SAFE TORQUE OFF function is fail-safe, so when the SAFE TORQUE OFF input is disconnected the drive will not operate the motor, even if a combination of components within the drive has failed. Most component failures are revealed by the drive failing to operate. SAFE TORQUE OFF is also independent of the drive firmware. This meets the requirements of the following standards, for the prevention of operation of the motor.[1]

EN 61800-5-2:2007 SIL 3 (PFH $\leq 10^{-8}$)

EN ISO 13849-1:2006 PL e ($MTTF_D > 10^5$ yr)

EN954-1:1997 Category 3

On drives with date code P04 and later the SAFE TORQUE OFF input also meets the requirements of EN 81-1 (clause 12.7.3 b) as part of a system for preventing unwanted operation of the motor in a lift (elevator).[2]

[1] Independent approval has been given by BGIA.

[2] Independent approval of concept has been given by TÜV. Please consult the separate guide for lift applications for further information.

SAFE TORQUE OFF can be used to eliminate electro-mechanical contactors, including special safety contactors, which would otherwise be required for safety applications.

Note on response time of SAFE TORQUE OFF, and use with safety controllers with self-testing outputs (drives with date code P04 and later).

SAFE TORQUE OFF has been designed to have a response time of greater than 1ms, so that it is compatible with safety controllers whose outputs are subject to a dynamic test with a pulse width not exceeding 1ms.

For applications where a fast-acting disable function is required, please see section 11.21.10 *Fast Disable* on page 264.

Note on the use of servo motors, other permanent-magnet motors, reluctance motors and salient-pole induction motors

When the drive is disabled through SAFE TORQUE OFF, a possible (although highly unlikely) failure mode is for two power devices in the inverter circuit to conduct incorrectly.

This fault cannot produce a steady rotating torque in any AC motor. It produces no torque in a conventional induction motor with a cage rotor. If the rotor has permanent magnets and/or saliency, then a transient alignment torque may occur. The motor may briefly try to rotate by up to 180° electrical, for a permanent magnet motor, or 90° electrical, for a salient pole induction motor or reluctance motor. This possible failure mode must be allowed for in the machine design.

WARNING

The design of safety-related control systems must only be done by personnel with the required training and experience. The SAFE TORQUE OFF function will only ensure the safety of a machine if it is correctly incorporated into a complete safety system. The system must be subject to a risk assessment to confirm that the residual risk of an unsafe event is at an acceptable level for the application.

WARNING

SAFE TORQUE OFF inhibits the operation of the drive, this includes inhibiting braking. If the drive is required to provide both braking and SAFE TORQUE OFF in the same operation (e.g. for emergency stop) then a safety timer relay or similar device must be used to ensure that the drive is disabled a suitable time after braking. The braking function in the drive is provided by an electronic circuit which is not fail-safe. If braking is a safety requirement, it must be supplemented by an independent fail-safe braking mechanism.

WARNING

SAFE TORQUE OFF does not provide electrical isolation. The supply to the drive must be disconnected by an approved isolation device before gaining access to power connections.

WARNING

Low voltage DC operation

With low voltage DC operation there is a reduction in the level of safety of the SAFE TORQUE OFF function. There exist certain unlikely faults which might permit the drive to produce some limited motor torque when disabled, but only if the DC supply has its negative pole connected to ground.

To prevent a loss of the safety function in the event of such a fault, one of the following methods can be used:

1. Monitor the state of Pr **8.09**. This parameter value should match the state of the enable input. If it does not match then there is a fault and further operation must be prevented.
2. Connect the positive pole of the DC supply to ground.
3. Connect neither pole of the DC supply to ground. Use a ground fault detection circuit to prevent further operation in the event of a ground fault in the DC circuit. If the detection circuit requires the supply to be biased relative to ground, ensure that the bias is negative, i.e. both DC rails are negative relative to ground.

Note that in lift (elevator) applications designed to meet EN 81-1 with the use of one contactor or no contactors, method 1 is normally implemented as part of the standard lift safety control system.

With SAFE TORQUE OFF there are no single faults in the drive which can permit the motor to be driven. Therefore it is not necessary to have a second channel to interrupt the power connection, nor a fault detection circuit.

It is important to note that a single short-circuit from the SAFE TORQUE OFF input to a DC supply of approximately +24V would cause the drive to be enabled. This can be excluded under EN ISO 13849-2 by the use of protected wiring. The wiring can be protected by either of the following methods:

- By placing the wiring in a segregated cable duct or other enclosure.

or

- By providing the wiring with a grounded shield in a positive-logic grounded control circuit. The shield is provided to avoid a hazard from an electrical fault. It may be grounded by any convenient method; no special EMC precautions are required.

If the use of protected wiring is not acceptable, so that the possibility of this short circuit occurring is anticipated, then a relay must be used to monitor the state of the SAFE TORQUE OFF input, together with a single safety contactor to prevent operation of the motor after a fault.

For more information regarding the SAFE TORQUE OFF input, please see the *Control Techniques Safe Torque Off Engineering Guide* available for download from www.controltechniques.com.

5 Getting Started

This chapter introduces the user interfaces, menu structure and security levels of the drive.

5.1 Understanding the display

There are two types of keypad available for the Unidrive SP, LED and LCD. The SM-Keypad and SP0 Keypad have an LED display, and the SM-Keypad Plus has an LCD display. The SP0 Keypad can only be installed to size 0, and the SM-Keypad can only be installed to size 1 to 6. The SM-Keypad Plus can either be installed to the size 1 to 6, or it can be remotely mounted on an enclosure door.

5.1.1 SM-Keypad/SP0 Keypad (LED)

The display consists of two horizontal rows of 7 segment LED displays.

The upper display shows the drive status or the current menu and parameter number being viewed.

The lower display shows the parameter value or the specific trip type.

Figure 5-1 SM-Keypad

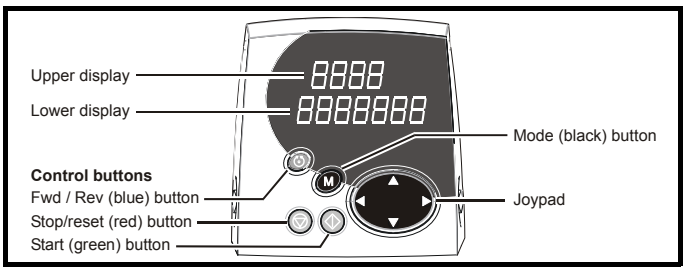

5.1.2 SM-Keypad Plus (LCD)

The display consists of three lines of text.

The top line shows the drive status or the current menu and parameter number being viewed on the left, and the parameter value or the specific trip type on the right.

The lower two lines show the parameter name or the help text.

Figure 5-2 SM-Keypad Plus

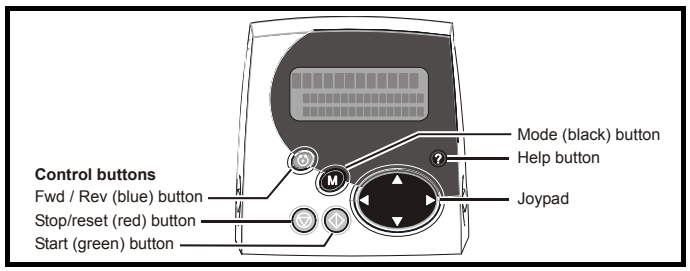

WARNING

Beware of possible live terminals when attaching the SP0 Keypad to the drive.

Figure 5-3 SPO Keypad

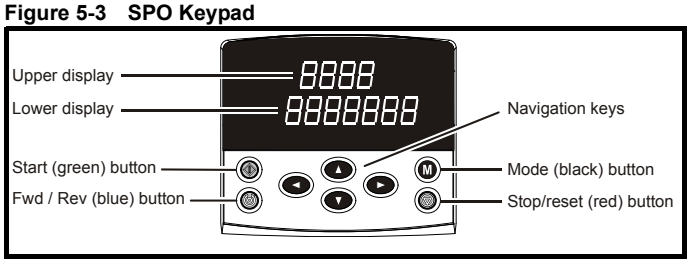

NOTE

The red stop button is also used to reset the drive.

The SM-Keypad/SP0 Keypad and the SM-Keypad Plus can indicate when a SMARTCARD access is taking place or when the second motor map is active (menu 21). These are indicated on the displays as follows.

	SM-Keypad / SP0 Keypad	SM-Keypad Plus
SMARTCARD access taking place	The decimal point after the fourth digit in the upper display will flash.	The symbol 'CC' will appear in the lower left hand corner of the display
Second motor map active	The decimal point after the third digit in the upper display will flash.	The symbol 'Mot2' will appear in the lower left hand corner of the display
Solutions Module parameters displayed		The symbol 'Opx' will appear in the left hand corner of the display

5.2 Keypad operation

5.2.1 Control buttons

The keypad consists of:

1. Joypad - used to navigate the parameter structure and change parameter values.
2. Mode button - used to change between the display modes – parameter view, parameter edit, status.
3. Three control buttons - used to control the drive if keypad mode is selected.
4. Help button (SM-Keypad Plus only) - displays text briefly describing the selected parameter.

The Help button toggles between other display modes and parameter help mode. The up and down functions on the joypad scroll the help text to allow the whole string to be viewed. The right and left functions on the joypad have no function when help text is being viewed.

The display examples in this section show the SM-Keypad 7 segment LED display. The examples are the same for the SM-Keypad Plus except that the information displayed on the lower row on the SM-Keypad is displayed on the right hand side of the top row on the SM-Keypad Plus.

Figure 5-4 Display modes

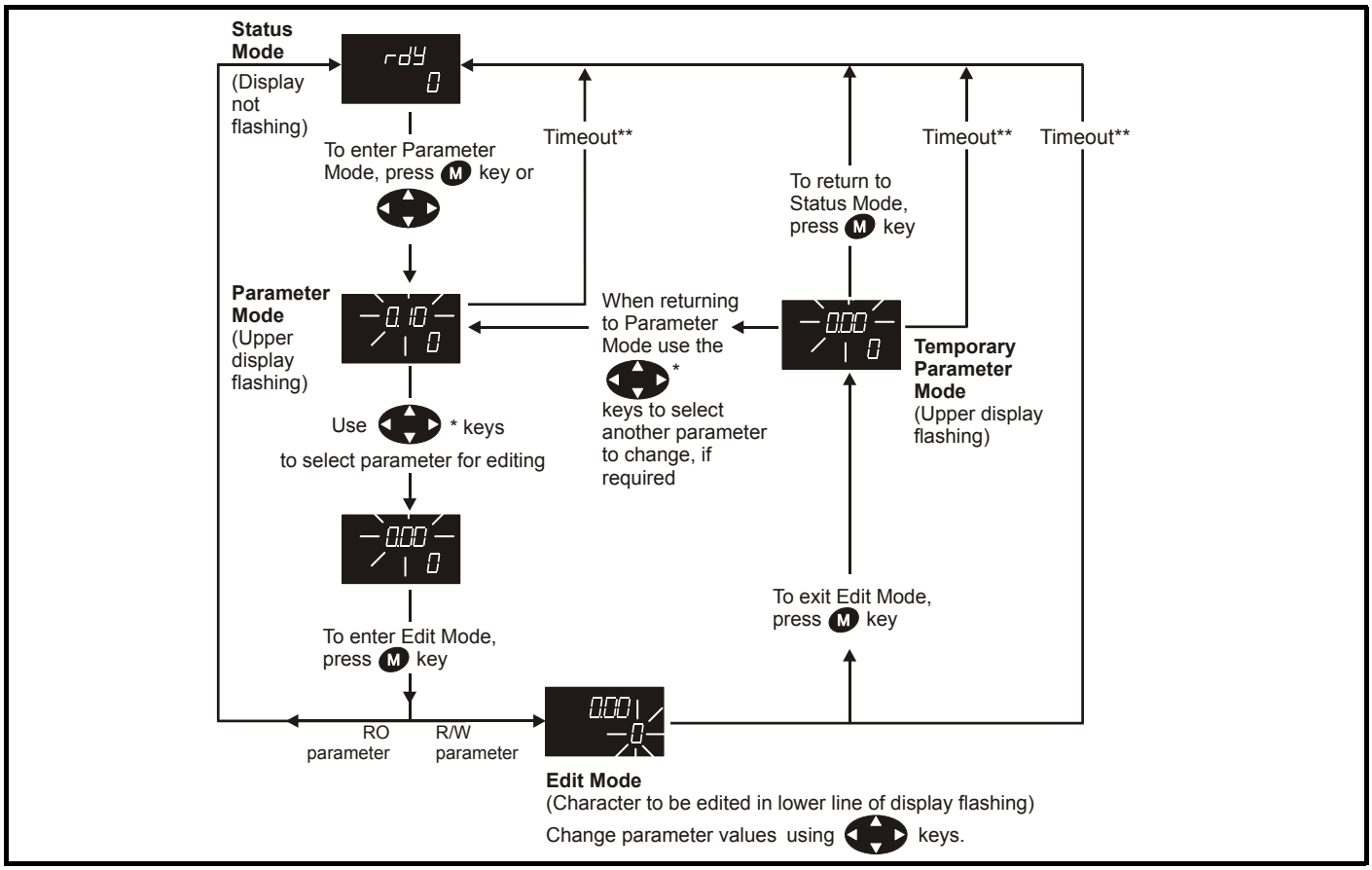

* Can only be used to move between menus if L2 access has been enabled (Pr **0.49**). Refer to section 5.9 *Parameter access level and security* on page 105.
Timeout defined by Pr **11.41 (default value = 240s).

Figure 5-5 Mode examples

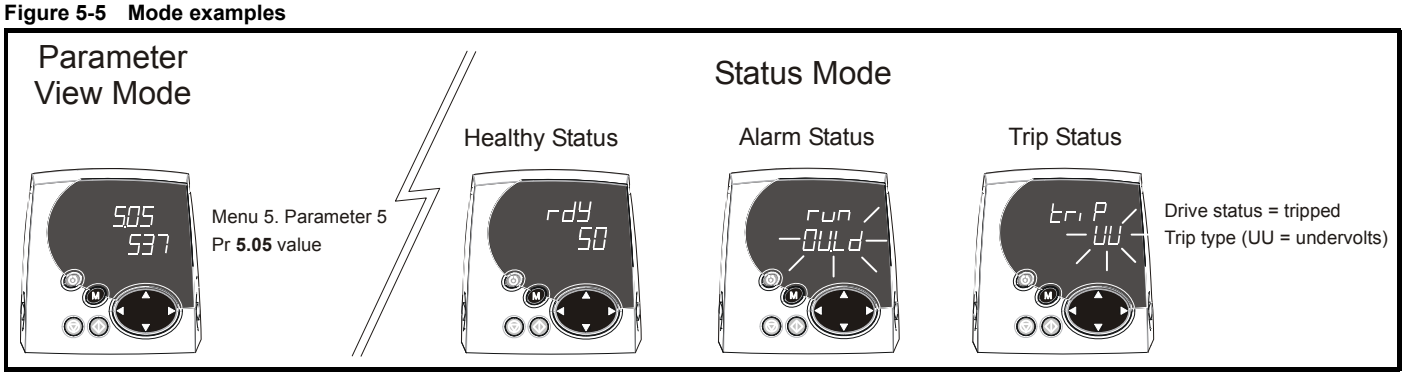

WARNING

Do not change parameter values without careful consideration; incorrect values may cause damage or a safety hazard.

NOTE

When changing the values of parameters, make a note of the new values in case they need to be entered again.

NOTE

For new parameter-values to apply after the AC supply to the drive is interrupted, new values must be saved. Refer to section 5.7 *Saving parameters* on page 104.

5.3 Menu structure

The drive parameter structure consists of menus and parameters.

The drive initially powers up so that only menu 0 can be viewed. The up and down arrow buttons are used to navigate between parameters and once level 2 access (L2) has been enabled (see Pr **0.49**) the left and right buttons are used to navigate between menus. For further information, refer to section 5.9 *Parameter access level and security* on page 105.

Figure 5-6 Parameter navigation

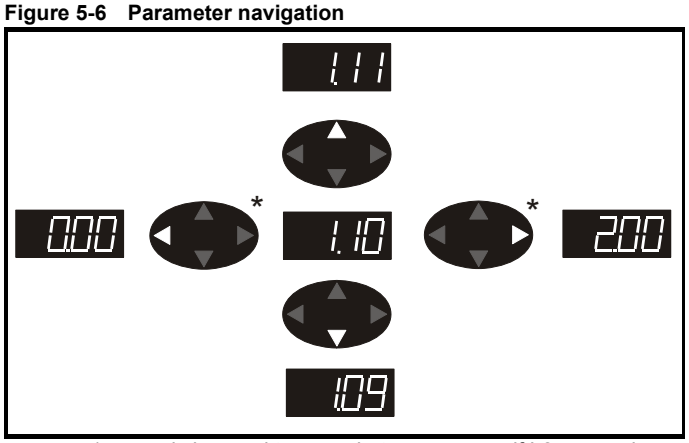

* can only be used to move between menus if L2 access has been enabled (Pr **0.49**). Refer to section 5.9 *Parameter access level and security* on page 105.

The menus and parameters roll over in both directions.

i.e. if the last parameter is displayed, a further press will cause the display to rollover and show the first parameter.

When changing between menus the drive remembers which parameter was last viewed in a particular menu and thus displays that parameter.

Figure 5-7 Menu structure

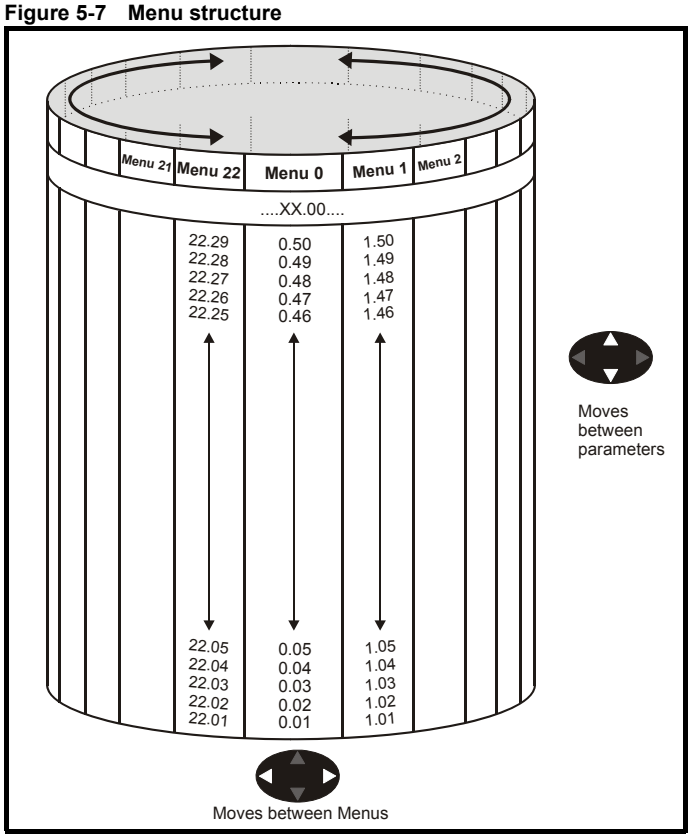

5.4 Menu 0

Menu 0 is used to bring together various commonly used parameters for basic easy set up of the drive.
Appropriate parameters are copied from the advanced menus into menu 0 and thus exist in both locations.

For further information, refer to Chapter 6 *Basic parameters* on page 107.

Figure 5-8 Menu 0 copying

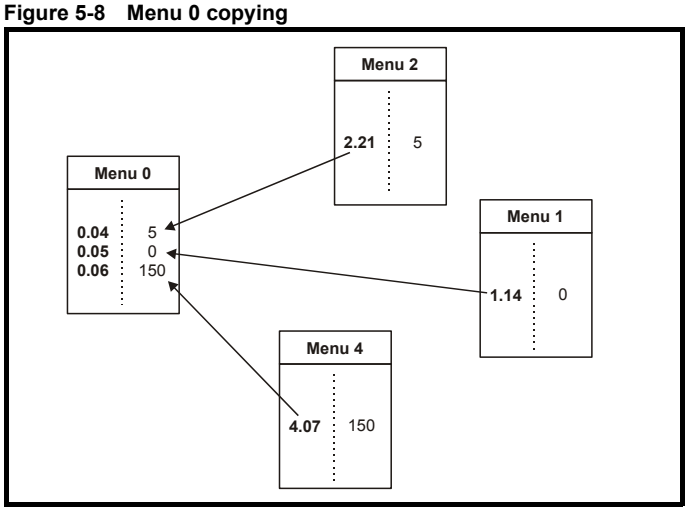

5.5 Advanced menus

The advanced menus consist of groups or parameters appropriate to a specific function or feature of the drive. Menus 0 to 22 can be viewed on all keypads. Menus 40 and 41 are specific to the SM-Keypad Plus (LCD). Menus 70 to 91 can be viewed with an SM-Keypad Plus (LCD) only when an SM-Applications is installed.

Table 5-1 Advanced menu descriptions

Menu	Description	LED	LCD
0	Commonly used basic set up parameters for quick / easy programming	✓	✓
1	Frequency / speed reference	✓	✓
2	Ramps	✓	✓
3	Slave frequency, speed feedback and speed control	✓	✓
4	Torque and current control	✓	✓
5	Motor control	✓	✓
6	Sequencer and clock	✓	✓
7	Analog I/O	✓	✓
8	Digital I/O	✓	✓
9	Programmable logic, motorized pot and binary sum	✓	✓
10	Status and trips	✓	✓
11	General drive set-up	✓	✓
12	Threshold detectors and variable selectors	✓	✓
13	Position control	✓	✓
14	User PID controller	✓	✓
15, 16, 17	Solutions Module set-up	✓	✓
18	Application menu 1	✓	✓
19	Application menu 2	✓	✓
20	Application menu 3	✓	✓
21	Second motor parameters	✓	✓
22	Additional Menu 0 set-up	✓	✓
40	Keypad configuration menu	X	✓
41	User filter menu	X	✓
70	PLC registers	X	✓
71	PLC registers	X	✓
72	PLC registers	X	✓
73	PLC registers	X	✓
74	PLC registers	X	✓
75	PLC registers	X	✓
85	Timer function parameters	X	✓
86	Digital I/O parameters	X	✓
88	Status parameters	X	✓
90	General parameters	X	✓
91	Fast access parameters	X	✓

5.5.1 SM-Keypad Plus set-up menus

Table 5-2 Menu 40 parameter descriptions

Parameter		Range(⇳)
40.00	Parameter 0	0 to 32767
40.01	Language selection	English (0), Custom (1), French (2), German (3), Spanish (4), Italian (5)
40.02	Software version	999999
40.03	Save to flash	Idle (0), Save (1), Restore (2), Default (3)
40.04	LCD contrast	0 to 31
40.05	Drive and attribute database upload was bypassed	Updated (0), Bypass (1)
40.06	Browsing favourites control	Normal (0), Filter (1)
40.07	Keypad security code	0 to 999
40.08	Communication channel selection	Disable (0), Slot1 (1), Slot2 (2), Slot3 (3), Slave (4), Direct (5)
40.09	Hardware key code	0 to 999
40.10	Drive node ID (Address)	0 to 255
40.11	Flash ROM memory size	4Mbit (0), 8Mbit (1)
40.19	String database version number	0 to 999999
40.20	Screen saver strings and enable	None (0), Default (1), User (2)
40.21	Screen saver interval	0 to 600
40.22	Turbo browse time interval	0 to 200ms

Table 5-3 Menu 41 parameter descriptions

Parameter		Range(⇳)
41.00	Parameter 0	0 to 32767
41.01 to 41.50	Browsing filter source F01 to F50	Pr **0.00** to Pr **391.51**
41.51	Browsing favourites control	Normal (0), Filter (1)

5.5.2 Display messages

The following tables indicate the various possible mnemonics which can be displayed by the drive and their meaning.

Trip types are not listed here but can be found in Chapter 6 *Basic parameters* on page 107 if required.

Table 5-4 Alarm indications

Lower display	Description
br.rS	Braking resistor overload
Braking resistor I^2t accumulator (Pr **10.39**) in the drive has reached 75.0% of the value at which the drive will trip and the braking IGBT is active.	
Hot	Heatsink or control board or inverter IGBT over temperature alarms are active
• The drive heatsink temperature has reached a threshold and the drive will trip 'Oh2' if the temperature continues to rise (see the 'Oh2' trip). or • The ambient temperature around the control PCB is approaching the over temperature threshold (see the 'O.CtL' trip).	
OVLd	Motor overload
The motor I^2t accumulator in the drive has reached 75% of the value at which the drive will be tripped and the load on the drive is >100%	
Auto tune	Autotune in progress
The autotune procedure has been initialised. 'Auto' and 'tunE' will flash alternatively on the display.	
Lt	Limit switch is active
Indicates that a limit switch is active and that it is causing the motor to be stopped (i.e. forward limit switch with forward reference etc.)	
PLC	Onboard PLC program is running
An Onboard PLC program is installed and running. The lower display will flash 'PLC' once every 10s.	

Table 5-5 Solutions Module and SMARTCARD status indications on power-up

Lower display	Description
boot	
A parameter set is being transferred from the SMARTCARD to the drive during power-up. For further information, please refer to section 9.2.4 *Booting up from the SMARTCARD on every power up (Pr 11.42 = boot (4))* on page 152.	
cArd	
The drive is writing a parameter set to the SMARTCARD during power-up. For further information, please refer to section 9.2.3 *Auto saving parameter changes (Pr 11.42 = Auto (3))* on page 152.	
loAding	
The drive is writing information to a Solutions Module.	

5.6 Changing the operating mode

Changing the operating mode returns all parameters to their default value, including the motor parameters. (Pr **0.49** *Security status* and Pr **0.34** *User security code* are not affected by this procedure.)

Procedure

Use the following procedure only if a different operating mode is required:

1. Ensure the drive is not enabled, i.e. terminal 31 is open or Pr **6.15** is OFF (0)
2. Enter either of the following values in Pr **xx.00**, as appropriate:
   1253 (EUR, 50Hz AC supply frequency)
   1254 (USA, 60Hz AC supply frequency)
3. Change the setting of Pr **0.48** as follows:

Pr 0.48 setting		Operating mode
	1	Open-loop
	2	Closed-loop vector and RFC
	3	Closed-loop Servo
	4	Regen (See the *Unidrive SP Regen Installation Guide* for more information about operating in this mode)

The figures in the second column apply when serial communications are used.

4. Either:

- Press the red reset button
- Toggle the reset digital input
- Carry out a drive reset through serial communications by setting Pr **10.38** to 100 (ensure that Pr. **xx.00** returns to 0).

NOTE

Entering 1253 or 1254 in Pr **xx.00** will only load defaults if the setting of Pr **0.48** has been changed.

5.7 Saving parameters

When changing a parameter in Menu 0, the new value is saved when pressing the M Mode button to return to parameter view mode from parameter edit mode.

If parameters have been changed in the advanced menus, then the change will not be saved automatically. A save function must be carried out.

Procedure

Enter 1000* in Pr. **xx.00**

Either:

- Press the red reset button
- Toggle the reset digital input
- Carry out a drive reset through serial communications by setting Pr **10.38** to 100 (ensure that Pr. **xx.00** returns to 0).

*If the drive is in the under voltage trip state or is being supplied from a low voltage DC supply, a value of 1001 must be entered into Pr **xx.00** to perform a save function.

5.8 Restoring parameter defaults

Restoring parameter defaults by this method saves the default values in the drive's memory. (Pr **0.49** and Pr **0.34** are not affected by this procedure.)

Procedure

1. Ensure the drive is not enabled, i.e. terminal 31 is open or Pr **6.15** is OFF (0)
2. Enter 1233 (EUR 50Hz settings) or 1244 (USA 60Hz settings) in Pr **xx.00**.

3. Either:
- Press the red reset button
- Toggle the reset digital input
- Carry out a drive reset through serial communications by setting Pr **10.38** to 100 (ensure that Pr. **xx.00** returns to 0).

5.9 Parameter access level and security

The parameter access level determines whether the user has access to menu 0 only or to all the advanced menus (menus 1 to 22) in addition to menu 0.

The User Security determines whether the access to the user is read only or read write.

Both the User Security and Parameter Access Level can operate independently of each other as shown in the table below:

Parameter Access Level	User Security	Menu 0 status	Advanced menus status
L1	Open	RW	Not visible
L1	Closed	RO	Not visible
L2	Open	RW	RW
L2	Closed	RO	RO

RW = Read / write access RO = Read only access

The default settings of the drive are Parameter Access Level L1 and user Security Open, i.e. read / write access to Menu 0 with the advanced menus not visible.

5.9.1 Access Level

The access level is set in Pr **0.49** and allows or prevents access to the advanced menu parameters.

L1 access selected - Menu 0 only visible

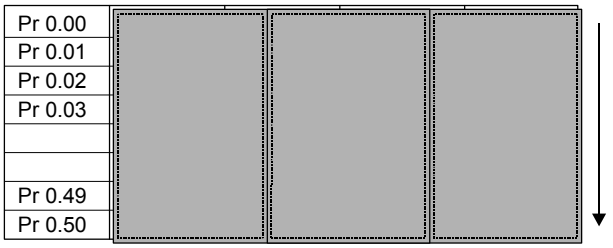

L2 access selected - All parameters visible

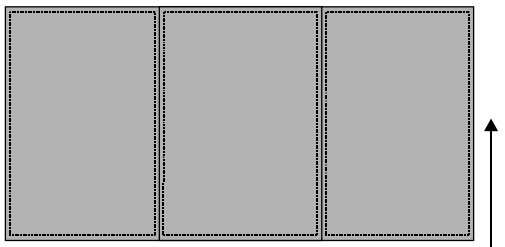

Pr 0.00	Pr 1.00	.....	Pr 21.00	Pr 22.00
Pr 0.01	Pr 1.01	.....	Pr 21.01	Pr 22.01
Pr 0.02	Pr 1.02	.....	Pr 21.02	Pr 22.02
Pr 0.03	Pr 1.03	.....	Pr 21.03	Pr 22.03
		.....		
		.....		
Pr 0.49	Pr 1.49	.....	Pr 21.30	Pr 22.28
Pr 0.50	Pr 1.50	.....	Pr 21.31	Pr 22.29

5.9.2 Changing the Access Level

The Access Level is determined by the setting of Pr **0.49** as follows:

String	Value	Effect
L1	0	Access to menu 0 only
L2	1	Access to all menus (menu 0 to menu 22)

The Access Level can be changed through the keypad even if the User Security has been set.

5.9.3 User Security

The User Security, when set, prevents write access to any of the parameters (other than Pr. **0.49** and Pr **11.44** *Access Level*) in any menu.

User security open - All parameters: Read / Write access

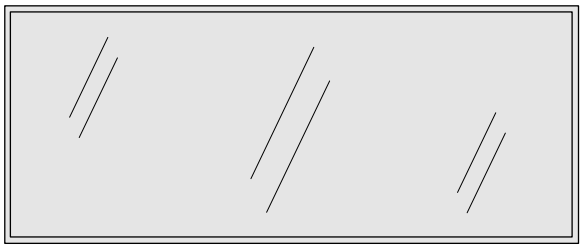

Pr 0.00	Pr 1.00	.....	Pr 21.00	Pr 22.00
Pr 0.01	Pr 1.01	.....	Pr 21.01	Pr 22.01
Pr 0.02	Pr 1.02	.....	Pr 21.02	Pr 22.02
Pr 0.03	Pr 1.03	.....	Pr 21.03	Pr 22.03
		.....		
		.....		
Pr 0.49	Pr 1.49	.....	Pr 21.30	Pr 22.28
Pr 0.50	Pr 1.50	.....	Pr 21.31	Pr 22.29

User security closed - All parameters: Read Only access (except Pr **0.49** and Pr **11.44**)

Pr 0.00	Pr 1.00	.....	Pr 21.00	Pr 22.00
Pr 0.01	Pr 1.01	.....	Pr 21.01	Pr 22.01
Pr 0.02	Pr 1.02	.....	Pr 21.02	Pr 22.02
Pr 0.03	Pr 1.03	.....	Pr 21.03	Pr 22.03
		.....		
		.....		
Pr 0.49	Pr 1.49	.....	Pr 21.30	Pr 22.28
Pr 0.50	Pr 1.50	.....	Pr 21.31	Pr 22.29

Setting User Security

Enter a value between 1 and 999 in Pr **0.34** and press the M button; the security code has now been set to this value. In order to activate the security, the Access level must be set to Loc in Pr **0.49**. When the drive is reset, the security code will have been activated and the drive returns to Access Level L1. The value of Pr **0.34** will return to 0 in order to hide the security code. At this point, the only parameter that can be changed by the user is the Access Level Pr **0.49**.

Unlocking User Security

Select a read write parameter to be edited and press the M button, the upper display will now show CodE. Use the arrow buttons to set the security code and press the M button.

With the correct security code entered, the display will revert to the parameter selected in edit mode.

If an incorrect security code is entered the display will revert to parameter view mode.

To lock the User Security again, set Pr **0.49** to Loc and press the reset button.

Disabling User Security

Unlock the previously set security code as detailed above. Set Pr **0.34** to 0 and press the M button. The User Security has now been disabled, and will not have to be unlocked each time the drive is powered up to allow read / write access to the parameters.

5.10 Displaying parameters with non-default values only

By entering 12000 in Pr **xx.00**, the only parameters that will be visible to the user will be those containing a non-default value. This function does not require a drive reset to become active. In order to deactivate this function, return to Pr **xx.00** and enter a value of 0.

Please note that this function can be affected by the access level enabled, refer to *section 5.9 Parameter access level and security* for further information regarding access level.

5.11 Displaying destination parameters only

By entering 12001 in Pr **xx.00**, the only parameters that will be visible to the user will be destination parameters. This function does not require a drive reset to become active. In order to deactivate this function, return to Pr **xx.00** and enter a value of 0.

Please note that this function can be affected by the access level enabled, refer to *section 5.9 Parameter access level and security* for further information regarding access level.

5.12 Serial communications

5.12.1 Introduction

The Unidrive SP has a standard 2-wire EIA485 interface (serial communications interface) which enables all drive set-up, operation and monitoring to be carried out with a PC or controller if required. Therefore, it is possible to control the drive entirely by serial communications without the need for an SM-keypad or other control cabling. The drive supports two protocols selected by parameter configuration:

- Modbus RTU
- CT ANSI

Modbus RTU has been set as the default protocol, as it is used with the PC-tools commissioning/start-up software as provided on the CD ROM.

The serial communications port of the drive is a RJ45 socket, which is isolated from the power stage and the other control terminals (see section 4.12 *Serial communications connections* on page 90 for connection and isolation details).

The communications port applies a 2 unit load to the communications network.

USB/EIA232 to EIA485 Communications

An external USB/EIA232 hardware interface such as a PC cannot be used directly with the 2-wire EIA485 interface of the drive. Therefore a suitable converter is required.

Suitable USB to EIA485 and EIA232 to EIA485 isolated converters are available from Control Techniques as follows:

- CT USB Comms cable (CT Part No. 4500-0096)
- CT EIA232 Comms cable (CT Part No. 4500-0087)

When using one of the above converters or any other suitable converter with the Unidrive SP, it is recommended that no terminating resistors be connected on the network. It may be necessary to 'link out' the terminating resistor within the converter depending on which type is used. The information on how to link out the terminating resistor will normally be contained in the user information supplied with the converter.

5.12.2 Serial communications set-up parameters

The following parameters need to be set according to the system requirements.

0.35 {11.24}	Serial mode								
RW	Txt							US	
⇳	AnSI (0) rtU (1)			⇨	rtU (1)				

This parameter defines the communications protocol used by the 485 comms port on the drive. This parameter can be changed via the drive keypad, via a Solutions Module or via the comms interface itself. If it is changed via the comms interface, the response to the command uses the original protocol. The master should wait at least 20ms before send a new message using the new protocol. (Note: ANSI uses 7 data bits, 1 stop bit and even parity; Modbus RTU uses 8 data bits, 2 stops bits and no parity.)

Comms value	String	Communications mode
0	AnSI	ANSI
1	rtU	Modbus RTU protocol
2	Lcd	Modbus RTU protocol, but with an SM-Keypad Plus only

ANSIx3.28 protocol

Full details of the CT ANSI communications protocol are the *Advanced User Guide*.

Modbus RTU protocol

Full details of the CT implementation of Modbus RTU are given in the *Advanced User Guide*.

Modbus RTU protocol, but with an SM-Keypad Plus only

This setting is used for disabling communications access when the SM-SM-Keypad Plus is used as a hardware key. See the *Advanced User Guide* for more details.

0.36 {11.25}	Serial communications baud rate								
RW	Txt							US	
⇳	300 (0), 600 (1), 1200 (2), 2400 (3), 4800 (4), 9600 (5), 19200 (6), 38400 (7), 57600 (8)*, 115200 (9)*			⇨	19200 (6)				

* Only applicable to Modbus RTU mode

This parameter can be changed via the drive keypad, via a Solutions Module or via the comms interface itself. If it is changed via the comms interface, the response to the command uses the original baud rate. The master should wait at least 20ms before sending a new message using the new baud rate.

NOTE

When using the CT EIA232 Comms cable the available baud rate is limited to 19.2k baud.

0.37 {11.23}	Serial communications address								
RW	Txt							US	
⇳	0 to 247			⇨	1				

Used to define the unique address for the drive for the serial interface. The drive is always a slave.

Modbus RTU

When the Modbus RTU protocol is used addresses between 0 and 247 are permitted. Address 0 is used to globally address all slaves, and so this address should not be set in this parameter

ANSI

When the ANSI protocol is used the first digit is the group and the second digit is the address within a group. The maximum permitted group number is 9 and the maximum permitted address within a group is 9. Therefore, Pr **0.37** is limited to 99 in this mode. The value 00 is used to globally address all slaves on the system, and x0 is used to address all slaves of group x, therefore these addresses should not be set in this parameter.

6 Basic parameters

Menu 0 is used to bring together various commonly used parameters for basic easy set up of the drive. All the parameters in menu 0 appear in other menus in the drive (denoted by {…}).

Menus 11 and 22 can be used to change most of the parameters in menu 0. Menu 0 can also contain up to 59 parameters by setting up menu 22.

6.1 Single line descriptions

Parameter			Range(⇳)			Default(⇨)			Type					
			OL	VT	SV	OL	VT	SV						
0.00	**xx.00**	{**x.00**}	0 to 32,767			0			RW	Uni				
0.01	Minimum reference clamp	{**1.07**}	±3,000.0Hz	±SPEED_LIMIT_MAX Hz/rpm		0.0			RW	Bi			PT	US
0.02	Maximum reference clamp	{**1.06**}	0 to 3,000.0Hz	SPEED_LIMIT_MAX Hz/rpm		EUR> 50.0 USA> 60.0	EUR> 1,500.0 USA> 1,800.0	3,000.0	RW	Uni				US
0.03	Acceleration rate	{**2.11**}	0.0 to 3,200.0 s/100Hz	0.000 to 3,200.000 s/1,000rpm		5.0	2.000	0.200	RW	Uni				US
0.04	Deceleration rate	{**2.21**}	0.0 to 3,200.0 s/100Hz	0.000 to 3,200.000 s/1,000rpm		10.0	2.000	0.200	RW	Uni				US
0.05	Reference select	{**1.14**}	A1.A2 (0), A1.Pr (1), A2.Pr (2), Pr (3), PAd (4), Prc (5)			A1.A2 (0)			RW	Txt		NC		US
0.06	Current limit	{**4.07**}	0 to Current_limit_max %			165.0	175.0		RW	Uni		RA		US
0.07	OL> Voltage mode select	{**5.14**}	Ur_S (0), Ur (1), Fd (2), Ur_Auto (3), Ur_I (4), SrE (5)			Ur_I (4)			RW	Txt				US
	CL> Speed controller P gain	{**3.10**}		0.0000 to 6.5535 1/rad s^{-1}			0.0300	0.0100	RW	Uni				US
0.08	OL> Voltage boost	{**5.15**}	0.0 to 25.0% of motor rated voltage			Size 0 to 3: 3.0 Size 4 & 5: 2.0 Size 6: 1.0			RW	Uni				US
	CL> Speed controller I gain	{**3.11**}		0.00 to 655.35 1/rad			0.10	1.00	RW	Uni				US
0.09	OL> Dynamic V/F	{**5.13**}	OFF (0) or On (1)			0			RW	Bit				US
	CL> Speed controller D gain	{**3.12**}		0.00000 to 0.65535 (s)			0.00000		RW	Uni				US
0.10	OL> Estimated motor speed	{**5.04**}	±180,000 rpm						RO	Bi	FI	NC	PT	
	CL> Motor speed	{**3.02**}		±Speed_max rpm					RO	Bi	FI	NC	PT	
0.11	OL & VT> Drive output frequency	{**5.01**}	±Speed_freq_max Hz	±1250 Hz					RO	Bi	FI	NC	PT	
	SV> Drive encoder position	{**3.29**}			0 to 65,535 $1/2^{16}$ths of a revolution				RO	Uni	FI	NC	PT	
0.12	Total motor current	{**4.01**}	0 to Drive_current_max A						RO	Uni	FI	NC	PT	
0.13	OL & VT> Motor active current	{**4.02**}	±Drive_current_max A						RO	Bi	FI	NC	PT	
	SV> Analog input 1 offset trim	{**7.07**}			±10.000 %			0.000	RW	Bi				US
0.14	Torque mode selector	{**4.11**}	0 to 1	0 to 4		Speed control mode (0)			RW	Uni				US
0.15	Ramp mode select	{**2.04**}	FASt (0) Std (1) Std.hV (2)	FASt (0) Std (1)		Std (1)			RW	Txt				US
0.16	OL> T28 and T29 auto-selection disable	{**8.39**}	OFF (0) or On (1)			OFF (0)			RW	Bit				US
	CL> Ramp enable	{**2.02**}		OFF (0) or On (1)			On (1)		RW	Bit				US
0.17	OL> T29 digital input destination	{**8.26**}	Pr **0.00** to Pr **21.51**			Pr **6.31**			RW	Uni	DE		PT	US
	CL> Current demand filter time constant	{**4.12**}		0.0 to 25.0 ms			0.0		RW	Uni				US
0.18	Positive logic select	{**8.29**}	OFF (0) or On (1)			On (1)			RW	Bit			PT	US
0.19	Analog input 2 mode	{**7.11**}	0-20 (0), 20-0 (1), 4-20tr (2), 20-4tr (3), 4-20 (4), 20-4 (5), VOLt (6)			VOLt (6)			RW	Txt				US
0.20	Analog input 2 destination	{**7.14**}	Pr **0.00** to Pr **21.51**			Pr **1.37**			RW	Uni	DE		PT	US
0.21	Analog input 3 mode	{**7.15**}	0-20 (0), 20-0 (1), 4-20tr (2), 20-4tr (3), 4-20 (4), 20-4 (5), VOLt (6), th.SC (7), th (8), th.diSp (9)			th (8)			RW	Txt			PT	US
0.22	Bipolar reference select	{**1.10**}	OFF (0) or On (1)			OFF (0)			RW	Bit				US
0.23	Jog reference	{**1.05**}	0 to 400.0 Hz	0 to 4000.0 rpm		0.0			RW	Uni				US
0.24	Pre-set reference 1	{**1.21**}	±Speed_limit_max rpm			0.0			RW	Bi				US
0.25	Pre-set reference 2	{**1.22**}	±Speed_limit_max rpm			0.0			RW	Bi				US
0.26	OL> Pre-set reference 3	{**1.23**}	±Speed_freq_max Hz/rpm			0.0			RW	Bi				US
	CL> Overspeed threshold	{**3.08**}		0 to 40,000 rpm			0		RW	Uni				US
0.27	OL> Pre-set reference 4	{**1.24**}	±Speed_freq_max Hz/rpm			0.0			RW	Bi				US
	CL> Drive encoder lines per revolution	{**3.34**}		0 to 50,000			1024	4096	RW	Uni				US
0.28	Keypad fwd/rev key enable	{**6.13**}	OFF (0) or On (1)			OFF (0)			RW	Bit				US

Parameter			Range(⇳)			Default(⇨)			Type					
			OL	VT	SV	OL	VT	SV						
0.29	SMARTCARD parameter data	{**11.36**}	0 to 999			0			RO	Uni		NC	PT	US
0.30	Parameter copying	{**11.42**}	nonE (0), rEAd (1), Prog (2), AutO (3), boot (4)			nonE (0)			RW	Txt		NC		*
0.31	Drive rated voltage	{**11.33**}	200 (0), 400 (1), 575 (2), 690 (3) V						RO	Txt		NC	PT	
0.32	Maximum Heavy Duty current rating	{**11.32**}	0.00 to 9999.99A						RO	Uni		NC	PT	
0.33	OL> Catch a spinning motor	{**6.09**}	0 to 3			0			RW	Uni				US
	VT> Rated rpm autotune	{**5.16**}		0 to 2			0		RW	Uni				US
0.34	User security code	{**11.30**}	0 to 999			0			RW	Uni		NC	PT	PS
0.35	Serial comms mode	{**11.24**}	AnSI (0), rtu (1), Lcd (2)			rtU (1)			RW	Txt				US
0.36	Serial comms baud rate	{**11.25**}	300 (0), 600 (1), 1200 (2), 2400 (3), 4800 (4), 9600 (5), 19200 (6), 38400 (7), 57600 (8) Modbus RTU only, 115200 (9) Modbus RTU only			19200 (6)			RW	Txt				US
0.37	Serial comms address	{**11.23**}	0 to 247			1			RW	Uni				US
0.38	Current loop P gain	{**4.13**}	0 to 30,000			All voltage ratings: 20	200V drive: 75 400V drive: 150 575V drive: 180 690V drive: 215		RW	Uni				US
0.39	Current loop I gain	{**4.14**}	0 to 30,000			All voltage ratings 40	200V drive: 1000 400V drive: 2000 575V drive: 2400 690V drive: 3000		RW	Uni				US
0.40	Autotune	{**5.12**}	0 to 2	0 to 4	0 to 6	0			RW	Uni				
0.41	Maximum switching frequency	{**5.18**}	3 (0), 4 (1), 6 (2), 8 (3), 12 (4), 16 (5) kHz			3 (0)		6 (2)	RW	Txt		RA		US
0.42	No. of motor poles	{**5.11**}	0 to 60 (Auto to 120 pole)			0 (Auto)		6 POLE (3)	RW	Txt				US
0.43	OL & VT> Motor rated power factor	{**5.10**}	0.000 to 1.000			0.850			RW	Uni				US
	SV> Encoder phase angle	{**3.25**}			0.0 to 359.9°			0.0	RW	Uni				US
0.44	Motor rated voltage	{**5.09**}	0 to AC_voltage_set_max V			200V drive: 230 400V drive: EUR> 400, USA> 460 575V drive: 575 690V drive: 690			RW	Uni		RA		US
0.45	OL & VT> Motor rated full load speed (rpm)	{**5.08**}	0 to 180,000 rpm	0.00 to 40,000.00 rpm		EUR> 1,500 USA> 1,800	EUR> 1,450.00 USA> 1,770.00		RW	Uni				US
	SV> Motor thermal time constant	{**4.15**}			0.0 to 3000.0			20.0	RW	Uni				US
0.46	Motor rated current	{**5.07**}	0 to Rated_current_max A			Drive rated current [**11.32**]			RW	Uni		RA		US
0.47	Rated frequency	{**5.06**}	0 to 3,000.0 Hz	0 to 1,250.0 Hz		EUR> 50.0 USA> 60.0			RW	Uni				US
0.48	Operating mode selector	{**11.31**}	OPEn LP (1), CL VECt (2), SErVO (3), rEgEn (4)			OPEn LP (1)	CL VECt (2)	SErVO (3)	RW	Txt		NC	PT	
0.49	Security status	{**11.44**}	L1 (0), L2 (1), Loc (2)						RW	Txt			PT	US
0.50	Software version	{**11.29**}	1.00 to 99.99						RO	Uni		NC	PT	
0.51	Action on trip detection	{**10.37**}	0 to 15			0			RW	Uni				US

* Modes 1 and 2 are not user saved, Modes 0, 3 and 4 are user saved

Key:

Coding	Attribute
OL	Open loop
CL	Closed loop vector and Servo
VT	Closed loop vector
SV	Servo
{X.XX}	Copied advanced parameter
RW	Read/write: can be written by the user
RO	Read only: can only be read by the user
Bit	1 bit parameter: 'On' or 'OFF' on the display
Bi	Bipolar parameter
Uni	Unipolar parameter
Txt	Text: the parameter uses text strings instead of numbers.
FI	Filtered: some parameters which can have rapidly changing values are filtered when displayed on the drive keypad for easy viewing.
DE	Destination: This parameter selects the destination of an input or logic function.

Coding	Attribute
RA	Rating dependent: this parameter is likely to have different values and ranges with drives of different voltage and current ratings. Parameters with this attribute will not be transferred to the destination drive by SMARTCARDs when the rating of the destination drive is different from the source drive and the file is a parameter file. However, with software V01.09.00 and later the value will be transferred if only the current rating is different and the file is a differences from default type file.
NC	Not copied: not transferred to or from SMARTCARDs during copying.
PT	Protected: cannot be used as a destination.
US	User save: parameter saved in drive EEPROM when the user initiates a parameter save.
PS	Power-down save: parameter automatically saved in drive EEPROM when the under volts (UV) trip occurs. With software version V01.08.00 and later, power-down save parameters are also saved in the drive when the user initiates a parameter save.

Figure 6-1 Menu 0 logic diagram

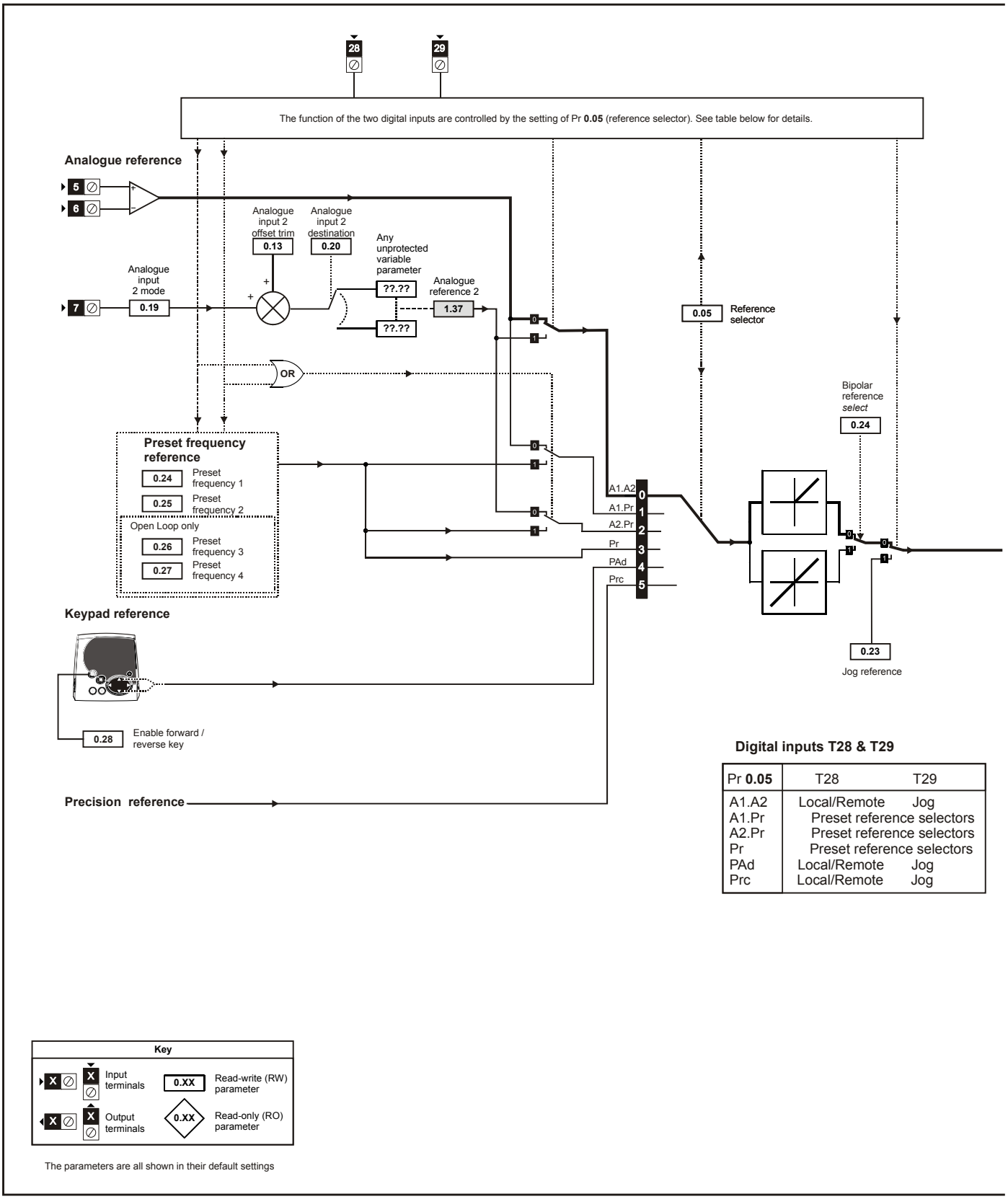

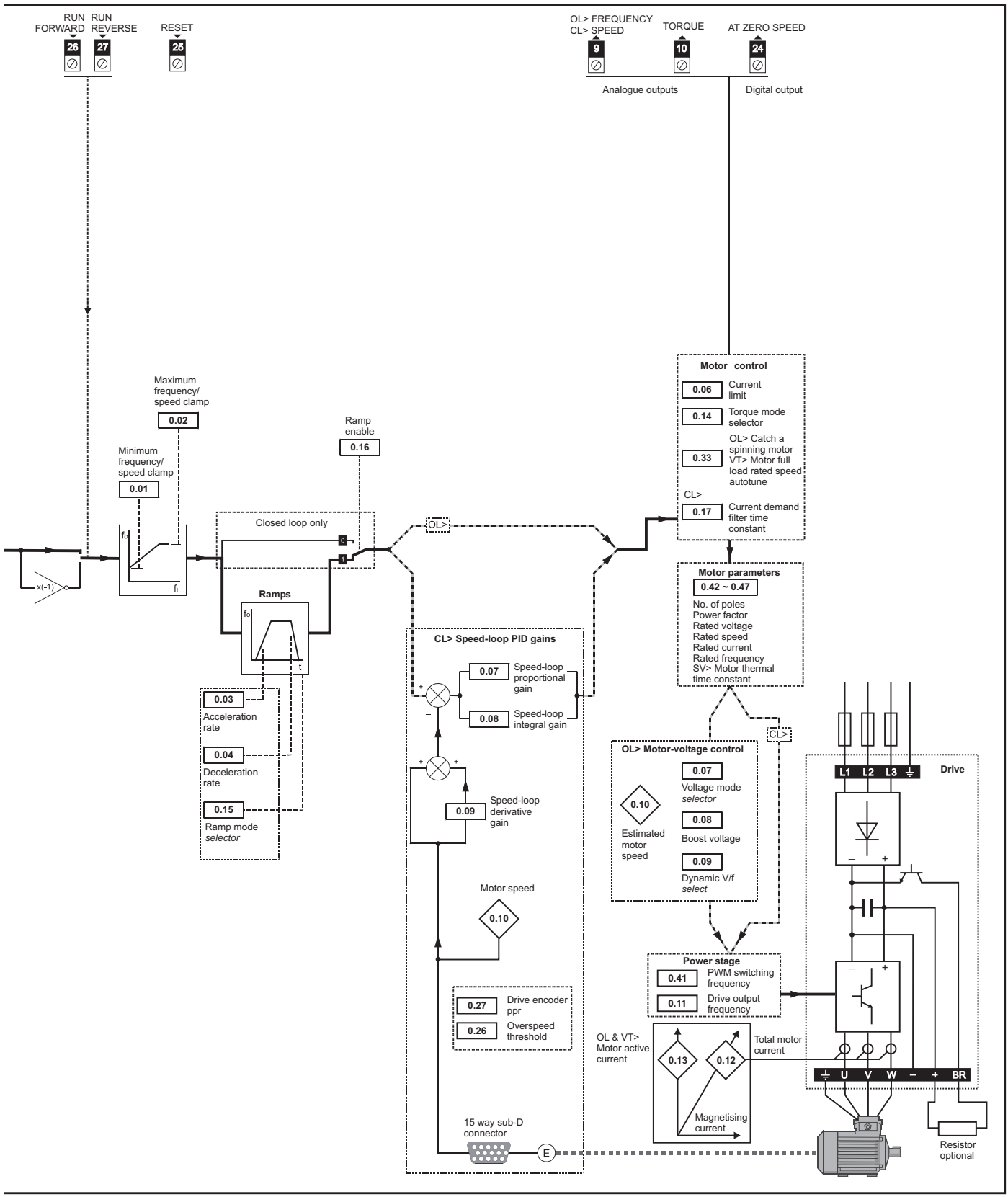
RUN FORWARD
26
RUN REVERSE
27
RESET
25
OL> FREQUENCY
CL> SPEED
9
TORQUE
10
AT ZERO SPEED
24
Analogue outputs
Digital output
Motor control
0.06 Current limit
0.14 Torque mode selector
0.33 OL> Catch a spinning motor VT> Motor full load rated speed autotune
CL>
0.17 Current demand filter time constant
Maximum frequency/ speed clamp
0.02
Minimum frequency/ speed clamp
0.01
Ramp enable
0.16
Closed loop only
OL>
Ramps
0.03 Acceleration rate
0.04 Deceleration rate
0.15 Ramp mode selector
Motor parameters
0.42 ~ 0.47
No. of poles
Power factor
Rated voltage
Rated speed
Rated current
Rated frequency
SV> Motor thermal time constant
CL> Speed-loop PID gains
0.07 Speed-loop proportional gain
0.08 Speed-loop integral gain
0.09 Speed-loop derivative gain
Motor speed
0.10
0.27 Drive encoder ppr
0.26 Overspeed threshold
15 way sub-D connector
OL> Motor-voltage control
0.07 Voltage mode selector
0.08 Boost voltage
0.09 Dynamic V/f select
0.10 Estimated motor speed
Power stage
0.41 PWM switching frequency
0.11 Drive output frequency
OL & VT> Motor active current
0.13
0.12
Total motor current
Magnetising current
Drive
L1 L2 L3
U V W – + BR
Resistor optional

6.2 Full descriptions

6.2.1 Parameter x.00

0.00 {x.00}	Parameter zero									
RW	Uni									
⇳	0 to 32,767				⇨	0				

Pr **x.00** is available in all menus and has the following functions.

Value	Action
1000	Save parameters when under voltage is not active (Pr **10.16** = 0) and low voltage DC supply is not active (Pr **6.44** = 0).
1001	Save parameters under all conditions
1070	Reset all option modules
1233	Load standard defaults
1244	Load US defaults
1253	Change drive mode with standard defaults
1254	Change drive mode with US defaults
1255	Change drive mode with standard defaults (excluding menus 15 to 20)
1256	Change drive mode with US defaults (excluding menus 15 to 20)
2001*	Transfer drive parameters as difference from default to a bootable SMARTCARD block in data block number 001
3yyy*	Transfer drive EEPROM data to a SMARTCARD block number yyy
4yyy*	Transfer drive data as difference from defaults to SMARTCARD block number yyy
5yyy*	Transfer drive ladder program to SMARTCARD block number yyy
6yyy*	Transfer SMARTCARD data block number yyy to the drive
7yyy*	Erase SMARTCARD data block number yyy
8yyy*	Compare drive parameters with SMARTCARD data block number yyy
9555*	Clear SMARTCARD warning suppression flag
9666*	Set SMARTCARD warning suppression card
9777*	Clear SMARTCARD read-only flag
9888*	Set SMARTCARD read-only flag
9999*	Erase SMARTCARD data block 1 to 499
110zy	Transfer electronic nameplate parameters to/from drive from/to encoder. See the *Advanced User Guide* for more information on this function.
12000**	Display non-default values only
12001**	Display destination parameters only

* See Chapter 9 *SMARTCARD operation* on page 150 for more information of these functions.

** These functions do not require a drive reset to become active. All other functions require a drive reset to initiate the function.

6.2.2 Speed limits

0.01 {1.07}	Minimum reference clamp									
RW	Bi							PT	US	
OL	⇳	±3,000.0Hz			⇨	0.0				
CL	⇳	±SPEED_LIMIT_MAX Hz/rpm			⇨	0.0				

(When the drive is jogging, [**0.01**] has no effect.)

Open-loop

Set Pr **0.01** at the required minimum output frequency of the drive for both directions of rotation. The drive speed reference is scaled between Pr **0.01** and Pr **0.02**. [**0.01**] is a nominal value; slip compensation may cause the actual frequency to be higher.

Closed-loop

Set Pr **0.01** at the required minimum motor speed for both directions of rotation. The drive speed reference is scaled between Pr **0.01** and Pr **0.02**.

0.02 {1.06}	Maximum reference clamp									
RW	Uni								US	
OL	⇳	0 to 3,000.0Hz			⇨		EUR> 50.0 USA> 60.0			
CL	⇳	SPEED_LIMIT_MAX Hz/rpm			⇨	**VT**	EUR> 1,500.0 USA> 1,800.0			
						SV	3,000.0			

(The drive has additional over-speed protection.)

Open-loop

Set Pr **0.02** at the required maximum output frequency for both directions of rotation. The drive speed reference is scaled between Pr **0.01** and Pr **0.02**. [**0.02**] is a nominal value; slip compensation may cause the actual frequency to be higher.

Closed-loop

Set Pr **0.02** at the required maximum motor speed for both directions of rotation. The drive speed reference is scaled between Pr **0.01** and Pr **0.02**.

For operating at high speeds see section 8.6 *High speed operation* on page 148.

6.2.3 Ramps, speed reference selection, current limit

0.03 {2.11}	Acceleration rate									
RW	Uni								US	
OL	⇳	0.0 to 3,200.0 s/100Hz			⇨		5.0			
CL	⇳	0.000 to 3,200.000 s/1,000rpm			⇨	**VT**	2.000			
						SV	0.200			

Set Pr **0.03** at the required rate of acceleration.

Note that larger values produce lower acceleration. The rate applies in both directions of rotation.

0.04 {2.21}	Deceleration rate									
RW	Uni								US	
OL	⇳	0.0 to 3,200.0 s/100Hz			⇨		10.0			
CL	⇳	0.000 to 3,200.000 s/1,000rpm			⇨	**VT**	2.000			
						SV	0.200			

Set Pr **0.04** at the required rate of deceleration.

Note that larger values produce lower deceleration. The rate applies in both directions of rotation.

0.05 {1.14}	Reference selector								
RW	Txt					NC		US	
⇳	0 to 5				⇨	A1.A2 (0)			

Use Pr **0.05** to select the required frequency/speed reference as follows:

Setting		
A1.A2	0	Analog input 1 OR analog input 2 selectable by digital input, terminal 28
A1.Pr	1	Analog input 1 OR preset frequency/speed selectable by digital input, terminal 28 and 29
A2.Pr	2	Analog input 2 OR preset frequency/speed selectable by digital input, terminal 28 and 29
Pr	3	Pre-set frequency/speed
PAd	4	Keypad reference
Prc	5	Precision reference

Setting Pr **0.05** to 1, 2 or 3 will re-configure T28 and T29. Refer to Pr **8.39** (Pr **0.16** in OL) to disable this function.

0.06 {4.07}	Current Limit								
RW	Uni				RA			US	
⇳	0 to Current_limit_max %				⇨	**OL**	165.0		
						CL	175.0		

Pr **0.06** limits the maximum output current of the drive (and hence maximum motor torque) to protect the drive and motor from overload.

Set Pr **0.06** at the required maximum torque as a percentage of the rated torque of the motor, as follows:

$$[\mathbf{0.06}] = \frac{\mathbf{T_R}}{\mathbf{T_{RATED}}} \times \mathbf{100\ (\%)}$$

Where:

$\mathbf{T_R}$ Required maximum torque

$\mathbf{T_{RATED}}$ Motor rated torque

Alternatively, set 0.06 at the required maximum active (torque-producing) current as a percentage of the rated active current of the motor, as follows:

$$[\mathbf{0.06}] = \frac{\mathbf{I_R}}{\mathbf{I_{RATED}}} \times \mathbf{100\ (\%)}$$

Where:

$\mathbf{I_R}$ Required maximum active current

$\mathbf{I_{RATED}}$ Motor rated active current

6.2.4 Voltage boost, (open-loop), Speed-loop PID gains (closed-loop)

0.07 {5.14}	Voltage mode selector								
RW	Txt							US	
OL	⇳	Ur_S (0), Ur (1), Fd (2), Ur_Auto (3), Ur_I (4), SrE (5)			⇨	Ur_I (4)			

Open-loop

There are six voltage modes available, which fall into two categories, vector control and fixed boost. For further details, refer to section *Pr 0.07 {5.14} Voltage mode* on page 138.

0.07 {3.10}	Speed controller proportional gain								
RW	Uni							US	
CL	⇳	0.0000 to 6.5535 1/rad s^{-1}			⇨	**VT**	0.0300		
						SV	0.0100		

Software V01.10.00 and later, the defaults are as above.

Software V01.09.01 and earlier, the default is 0.0100 in Closed-loop vector and servo mode.

Closed-loop

Pr **0.07** (**3.10**) operates in the feed-forward path of the speed-control loop in the drive. See Figure 11-4 on page 176 for a schematic of the speed controller. For information on setting up the speed controller gains, refer to Chapter 8 *Optimization* on page 137.

0.08 {5.15}	Low frequency voltage boost								
RW	Uni							US	
OL	⇳	0.0 to 25.0% of motor rated voltage			⇨	Size 1 to 3: 3.0 Size 4 & 5: 2.0, Size 6: 1.0			

Open-loop

When **0.07** *Voltage mode selector* is set at **Fd** or **SrE**, set Pr **0.08** (**5.15**) at the required value for the motor to run reliably at low speeds.

Excessive values of Pr **0.08** can cause the motor to be overheated.

0.08 {3.11}	Speed controller integral gain								
RW	Uni							US	
CL	⇳	0.00 to 655.35 1/rad			⇨	**VT**	0.10		
						SV	1.00		

Software V01.10.00 and later, the defaults are as above.

Software V01.09.01 and earlier, the default is 1.00 in Closed-loop vector and servo modes.

Closed-loop

Pr **0.08** (**3.11**) operates in the feed-forward path of the speed-control loop in the drive. See Figure 11-4 on page 176 for a schematic of the speed controller. For information on setting up the speed controller gains, refer to Chapter 8 *Optimization* on page 137.

0.09 {5.13}	Dynamic V/F / flux optimize select								
RW	Bit							US	
OL	⇳	OFF (0) or On (1)			⇨	OFF (0)			

Open-loop

Set Pr **0.09** (**5.13**) at 0 when the V/f characteristic applied to the motor is to be fixed. It is then based on the rated voltage and frequency of the motor.

Set Pr **0.09** at 1 when reduced power dissipation is required in the motor when it is lightly loaded. The V/f characteristic is then variable resulting in the motor voltage being proportionally reduced for lower motor currents. Figure 6-2 shows the change in V/f slope when the motor current is reduced.

Figure 6-2 Fixed and variable V/f characteristics

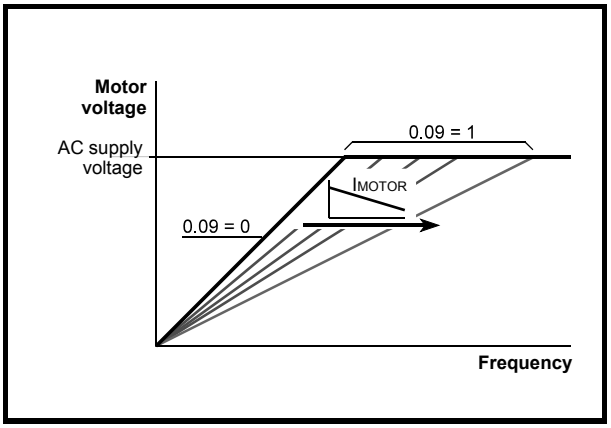

0.09 {3.12}	Speed controller differential feedback gain								
RW	Uni							US	
CL	⇳	0.00000 to 0.65535(s)			⇨	0.00000			

Closed-loop

Pr **0.09** (**3.12**) operates in the feedback path of the speed-control loop in the drive. See Figure 11-4 on page 176 for a schematic of the speed controller. For information on setting up the speed controller gains, refer to Chapter 8 *Optimization* on page 137.

6.2.5 Monitoring

0.10 {5.04}	Estimated motor speed								
RO	Bit	FI				NC	PT		
OL	⇳	±180,000 rpm			⇨				

Open-loop

Pr **0.10** (**5.04**) indicates the value of motor speed that is estimated from the following:

0.12 *Post-ramp frequency reference*
0.42 *Motor - no. of poles*

0.10 {3.02}	Motor speed								
RO	Bi	FI				NC	PT		
VT	⇳	±Speed_max rpm			⇨				

Closed-loop

Pr **0.10** (**3.02**) indicates the value of motor speed that is obtained from the speed feedback.

0.11 {5.01}	Drive output frequency								
RO	Bi	FI				NC	PT		
OL	⇳	±SPEED_FREQ_MAX Hz			⇨				
VT	⇳	±1250.0 Hz			⇨				

Open-loop & closed loop vector

Pr **0.11** displays the frequency at the drive output.

0.11 {3.29}	Drive encoder position								
RO	Uni	FI				NC	PT		
SV	⇳	0 to 65,535 1/2^{16}ths of a revolution			⇨				

Servo

Pr **0.11** displays the position of the encoder in mechanical values of 0 to 65,535. There are 65,536 units to one mechanical revolution.

0.12 {4.01}	Total motor current								
RO	Uni	FI				NC	PT		
⇳	0 to Drive_current_max A				⇨				

Pr **0.12** displays the rms value of the output current of the drive in each of the three phases. The phase currents consist of an active component and a reactive component, which can form a resultant current vector as shown in the following diagram.

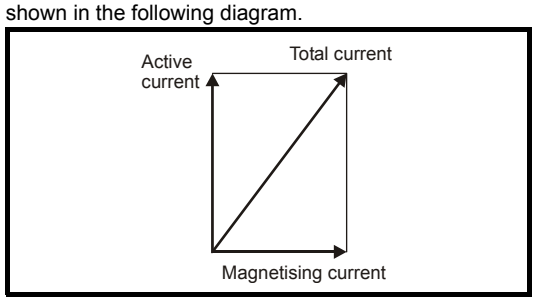

The active current is the torque producing current and the reactive current is the magnetizing or flux-producing current.

0.13 {4.02}	Motor active current								
RO	Bi	FI				NC	PT		
OL VT	⇳	±Drive_current_max A			⇨				

Open-loop & closed loop vector

When the motor is being driven below its rated speed, the torque is proportional to [**0.13**].

0.13 {7.07}	Analog input 1 offset trim								
RW	Bi							US	
SV	⇳	±10.000 %			⇨	0.000			

Servo

Pr **0.13** can be used to trim out any offset in the user signal to analog input 1.

6.2.6 Jog reference, Ramp mode selector, Stop and torque mode selectors

Pr **0.14** is used to select the required control mode of the drive as follows:

0.14 {4.11}	Torque mode selector								
RW	Uni							US	
OL	⇳	0 to 1			⇨	Speed control (0)			
CL	⇳	0 to 4			⇨				

Setting	Open-Loop	Closed-Loop
0	Frequency control	Speed control
1	Torque control	Torque control
2		Torque control with speed override
3		Coiler/uncoiler mode
4		Speed control with torque feed-forward

0.15 {2.04}	Ramp mode select									
RW	Txt							US		
OL	⇳	FASt (0) Std (1) Std.hV (2)	⇨	Std (1)						
CL	⇳	FASt (0) Std (1)	⇨							

Pr **0.15** sets the ramp mode of the drive as shown below:

0: Fast ramp

Fast ramp is used where the deceleration follows the programmed deceleration rate subject to current limits. This mode must be used if a braking resistor is connected to the drive.

1: Standard ramp

Standard ramp is used. During deceleration, if the voltage rises to the standard ramp level (Pr **2.08**) it causes a controller to operate, the output of which changes the demanded load current in the motor. As the controller regulates the link voltage, the motor deceleration increases as the speed approaches zero speed. When the motor deceleration rate reaches the programmed deceleration rate the controller ceases to operate and the drive continues to decelerate at the programmed rate. If the standard ramp voltage (Pr **2.08**) is set lower than the nominal DC bus level the drive will not decelerate the motor, but it will coast to rest. The output of the ramp controller (when active) is a current demand that is fed to the frequency changing current controller (Open-loop modes) or the torque producing current controller (Closed-loop vector or Servo modes). The gain of these controllers can be modified with Pr **4.13** and Pr **4.14**.

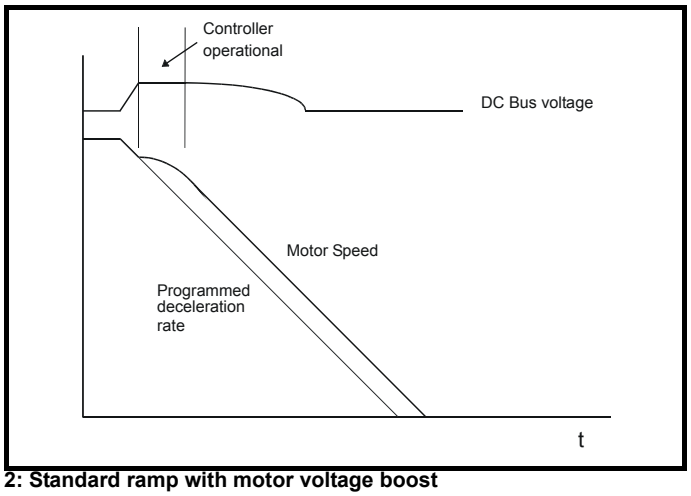

2: Standard ramp with motor voltage boost

This mode is the same as normal standard ramp mode except that the motor voltage is boosted by 20%. This increases the losses in the motor, dissipating some of the mechanical energy as heat giving faster deceleration.

0.16 {8.39}	T28 and T29 auto-selection disable									
RW	Bit							US		
OL	⇳	OFF (0) or On (1)	⇨	OFF (0)						

Open-loop

When Pr **0.16** is set to 0, digital inputs T28 and T29 are set up automatically with destinations according to the setting of the reference select Pr **0.05**.

Reference select 0.05		Terminal 28 function	Terminal 29 function
A1.A2 (0)	Reference selection by terminal input	Local / remote selector	Jog select
A1.Pr (1)	Analog reference 1 or presets selected by terminal input	Preset select bit 0	Preset select bit 1
A2.Pr (2)	Analog reference 2 or presets selected by terminal input	Preset select bit 0	Preset select bit 1
Pr (3)	Preset reference selected by terminal input	Preset select bit 0	Preset select bit 1
PAd (4)	Keypad reference selected	Local / remote selector	Jog select
Prc (5)	Precision reference selected	Local / remote selector	Jog select

Setting Pr **0.16** to 1 disables this automatic set-up, allowing the user to define the function of digital inputs T28 and T29.

0.16 {2.02}	Ramp enable									
RW	Bit							US		
CL	⇳	OFF (0) or On (1)	⇨	On (1)						

Setting Pr **0.16** to 0 allows the user to disable the ramps. This is generally used when the drive is required to closely follow a speed reference which already contains acceleration and deceleration ramps.

0.17 {8.26}	T29 digital input destination									
RW	Uni		DE				PT	US		
OL	⇳	Pr **0.00** to Pr **21.51**	⇨	Pr **6.31**						

Open-loop

Pr **0.17** sets the destination of digital input T29. This parameter is normally set-up automatically according to the reference selected by Pr **0.05**. In order to manually set-up this parameter, the T28 and T29 auto-selection disable (Pr **0.16**) must be set.

0.17 {4.12}	Current demand filter time constant									
RW	Uni							US		
CL	⇳	0.0 to 25.0 ms	⇨	0.0						

Closed-loop

A first order filter, with a time constant defined by Pr **0.17**, is provided on the current demand to reduce acoustic noise and vibration produced as a result of position feedback quantisation noise. The filter introduces a lag in the speed loop, and so the speed loop gains may need to be reduced to maintain stability as the filter time constant is increased.

0.18 {8.29}	Positive logic select									
RW	Bit							PT	US	
⇳	OFF (0) or On (1)	⇨	On (1)							

Pr **0.18** sets the logic polarity for digital inputs and digital outputs. This does not affect the drive enable input or the relay output.

0.19 {7.11}	Analog input 2 mode									
RW	Txt							US		
⇳	0 to 6	⇨	VOLt (6)							

In modes 2 & 3 a current loop loss trip is generated if the current falls below 3mA.

In modes 2 & 4 the analog input level goes to 0.0% if the input current falls below 4mA.

Pr value	Pr string	Mode	Comments
0	0-20	0 - 20mA	
1	20-0	20 - 0mA	
2	4-20.tr	4 - 20mA with trip on loss	Trip if I < 3mA
3	20-4.tr	20 - 4mA with trip on loss	Trip if I < 3mA
4	4-20	4 - 20mA with no trip on loss	0.0% if I ≤ 4mA
5	20-4	20 – 4mA with no trip on loss	100% if I ≤ 4mA
6	VOLt	Voltage mode	

0.20 {7.14}	Analog input 2 destination								
RW	Uni		DE				PT	US	
⇳	Pr **0.00** to Pr **21.51**				⇨	Pr **1.37**			

Pr **0.20** sets the destination of analog input 2.

0.21 {7.15}	Analog input 3 mode								
RW	Txt						PT	US	
⇳	0 to 9				⇨	th (8)			

Software V01.07.00 and later, the default is th (8)

Software V01.06.02 and earlier, the default is VOLt (6)

In modes 2 & 3 a current loop loss trip is generated if the current falls below 3mA.

In modes 2 & 4 the analog input level goes to 0.0% if the input current falls below 4mA.

Pr value	Pr string	Mode	Comments
0	0-20	0 - 20mA	
1	20-0	20 - 0mA	
2	4-20.tr	4 - 20mA with trip on loss	Trip if I < 3mA
3	20-4.tr	20 - 4mA with trip on loss	Trip if I < 3mA
4	4-20	4 - 20mA with no trip on loss	0.0% if I ≤ 4mA
5	20-4	20 - 4mA with no trip on loss	100% if I ≤ 4mA
6	VOLt	Voltage mode	
7	th.SC	Thermistor mode with short-circuit detection	Th trip if R > 3K3 Th reset if R < 1K8 ThS trip if R < 50R
8	th	Thermistor mode with no short-circuit detection	Th trip if R > 3K3 Th reset if R < 1K8
9	th.diSp	Thermistor mode with display only and no trip	

0.22 {1.10}	Bipolar reference select								
RW	Bit							US	
⇳	OFF (0) or On (1)				⇨	OFF (0)			

Pr **0.22** determines whether the reference is uni-polar or bi-polar as follows:

Pr 0.22	Function	
0	Unipolar speed/frequency reference	
1	Bipolar speed/frequency reference	

0.23 {1.05}	Jog reference								
RW	Uni							US	
OL	⇳	0 to 400.0 Hz			⇨	0.0			
CL	⇳	0 to 4,000.0 rpm			⇨				

Enter the required value of jog frequency/speed.

The frequency/speed limits affect the drive when jogging as follows:

Frequency-limit parameter	Limit applies
Pr **0.01** Minimum reference clamp	No
Pr **0.02** Maximum reference clamp	Yes

0.24 {1.21}	Preset reference 1								
RW	Bi							US	
⇳	±Speed_limit_max rpm				⇨	0.0			

0.25 {1.22}	Preset reference 2								
RW	Bi							US	
⇳	±Speed_limit_max rpm				⇨	0.0			

0.26 {1.23}	Preset reference 3								
RW	Bi							US	
OL	⇳	±Speed_freq_max Hz/rpm			⇨	0.0			

Open-loop

If the preset reference has been selected (see Pr **0.05**), the speed at which the motor runs is determined by these parameters.

0.26 {3.08}	Overspeed threshold								
RW	Uni							US	
CL	⇳	0 to 40,000 rpm			⇨	0			

Closed-loop

If the speed feedback (Pr **3.02**) exceeds this level in either direction, an overspeed trip is produced. If this parameter is set to zero, the overspeed threshold is automatically set to 120% x SPEED_FREQ_MAX.

0.27 {1.24}	Preset reference 4								
RW	Bi							US	
OL	⇳	±Speed_freq_max Hz/rpm			⇨	0.0			

Open-loop

Refer to Pr **0.24** to Pr **0.26**.

0.27 {3.34}	Drive encoder lines per revolution								
RW	Uni							US	
VT	⇳	0 to 50,000			⇨	1024			
SV	⇳				⇨	4096			

Closed-loop

Enter in Pr **0.27** the number of lines per revolution of the drive encoder.

0.28 {6.13}	Keypad fwd/rev key enable								
RW	Bit							US	
⇳	OFF (0) or On (1)				⇨	OFF (0)			

When a keypad is installed, this parameter enables the forward/reverse key.

0.29 {11.36}	SMARTCARD parameter data								
RO	Uni					NC	PT	US	
⇳	0 to 999				⇨	0			

This parameter shows the number of the data block last transferred from a SMARTCARD to the drive.

0.30 {11.42}	Parameter copying								
RW	Txt					NC		*	
⇳	0 to 4				⇨	nonE (0)			

* Modes 1 and 2 are not user saved, Modes 0, 3 and 4 are user saved.

NOTE

If Pr **0.30** is equal to 1 or 2 this value is not transferred to the EEPROM or the drive. If Pr **0.30** is set to a 3 or 4 the value is transferred.

Pr String	Pr value	Comment
nonE	0	Inactive
rEAd	1	Read parameter set from the SMARTCARD
Prog	2	Programming a parameter set to the SMARTCARD
Auto	3	Auto save
boot	4	Boot mode

For further information, please refer to Chapter 9 *SMARTCARD operation* on page 150.

0.31 {11.33}	Drive rated voltage								
RO	Txt					NC	PT		
⇳	200V (0), 400V (1), 575V (2), 690V (3)				⇨				

Pr **0.31** indicates the voltage rating of the drive.

0.32 {11.32}	Maximum Heavy Duty current rating								
RO	Uni					NC	PT		
⇳	0.00 to 9,999.99 A				⇨				

Pr **0.32** indicates the maximum continuous Heavy Duty current rating.

0.33 {6.09}	Catch a spinning motor								
RW	Uni							US	
OL ⇳	0 to 3				⇨	0			

Open-loop

When the drive is enabled with Pr **0.33** = 0, the output frequency starts at zero and ramps to the required reference. When the drive is enabled when Pr **0.33** has a non-zero value, the drive performs a start-up test to determine the motor speed and then sets the initial output frequency to the synchronous frequency of the motor. Restrictions may be placed on the frequencies detected by the drive as follows:

Pr 0.33	Function
0	Disabled
1	Detect all frequencies
2	Detect positive frequencies only
3	Detect negative frequencies only

0.33 {5.16}	Rated rpm autotune								
RW	Uni							US	
VT ⇳	0 to 2				⇨	0			

Closed-loop vector

The motor rated full load rpm parameter (Pr **0.45**) in conjunction with the motor rated frequency parameter (Pr **0.46**) defines the full load slip of the motor. The slip is used in the motor model for closed-loop vector control. The full load slip of the motor varies with rotor resistance which can vary significantly with motor temperature. When Pr **0.33** is set to 1 or 2, the drive can automatically sense if the value of slip defined by Pr **0.45** and Pr **0.46** has been set incorrectly or has varied with motor temperature. If the value is incorrect parameter Pr **0.45** is automatically adjusted. The adjusted value in Pr **0.45** is not saved at power-down. If the new value is required at the next power-up it must be saved by the user.

Automatic optimization is only enabled when the speed is above 12.5% of rated speed, and when the load on the motor load rises above 62.5% rated load. Opt i mis at ion is disabled again if the load falls below 50% of rated load.

For best opt i mis at ion results the correct values of stator resistance (Pr **5.17**), transient inductance (Pr **5.24**), stator inductance (Pr **5.25**) and saturation breakpoints (Pr **5.29**, Pr **5.30**) should be stored in the relevant parameters. These values can be obtained by the drive during an autotune (see Pr **0.40** for further details).

Rated rpm auto-tune is not available if the drive is not using external position/speed feedback.

The gain of the optimizer, and hence the speed with which it converges, can be set at a normal low level when Pr **0.33** is set to 1. If this parameter is set to 2 the gain is increased by a factor of 16 to give faster convergence.

0.34 {11.30}	User security code									
RW	Uni					NC	PT		PS	
⇳	0 to 999				⇨	0				

If any number other than 0 is programmed into this parameter, user security is applied so that no parameters except parameter **0.49** can be adjusted with the keypad. When this parameter is read via a keypad it appears as zero.

For further details refer to section 5.9.3 *User Security* on page 105.

0.35 {11.24}	Serial comms mode								
RW	Txt							US	
⇳	AnSI (0), rtu (1), Lcd (2)				⇨	rtU (1)			

This parameter defines the communications protocol used by the EIA485 comms port on the drive. This parameter can be changed via the drive keypad, via a Solutions Module or via the comms interface itself. If it is changed via the comms interface, the response to the command uses the original protocol. The master should wait at least 20ms before send a new message using the new protocol. (Note: ANSI uses 7 data bits, 1 stop bit and even parity; Modbus RTU uses 8 data bits, 2 stops bits and no parity).

Comms value	String	Communications mode
0	AnSI	ANSI
1	rtU	Modbus RTU protocol
2	Lcd	Modbus RTU protocol, but with an SM-Keypad Plus only

ANSIx3.28 protocol

Full details of the CT ANSI communications protocol are the *Advanced User Guide*.

Modbus RTU protocol

Full details of the CT implementation of Modbus RTU are given in the *Advanced User Guide*.

Modbus RTU protocol, but with an SM-Keypad Plus only

This setting is used for disabling communications access when the SM-Keypad Plus is used as a hardware key.

0.36 {11.25}	**Serial comms baud rate**									
RW	Txt								US	
⇳	300 (0), 600 (1), 1200 (2), 2400 (3), 4800 (4), 9600 (5), 19200 (6), 38400 (7), 57600 (8)*, 115200 (9)*				⇨	19200 (6)				

* only applicable to Modbus RTU mode

This parameter can be changed via the drive keypad, via a Solutions Module or via the comms interface itself. If it is changed via the comms interface, the response to the command uses the original baud rate. The master should wait at least 20ms before send a new message using the new baud rate.

0.37 {11.23}	**Serial comms address**									
RW	Uni								US	
⇳	0 to 247				⇨	1				

Used to define the unique address for the drive for the serial interface. The drive is always a slave.

Modbus RTU

When the Modbus RTU protocol is used addresses between 0 and 247 are permitted. Address 0 is used to globally address all slaves, and so this address should not be set in this parameter

ANSI

When the ANSI protocol is used the first digit is the group and the second digit is the address within a group. The maximum permitted group number is 9 and the maximum permitted address within a group is 9. Therefore, Pr **0.37** is limited to 99 in this mode. The value 00 is used to globally address all slaves on the system, and x0 is used to address all slaves of group x, therefore these addresses should not be set in this parameter.

0.38 {4.13}	**Current loop P gain**									
RW	Uni								US	
OL	⇳	0 to 30,000			⇨	All voltage ratings: 20				
CL	⇳				⇨	200V drive: 75 400V drive: 150 575V drive: 180 690V drive: 215				

0.39 {4.14}	**Current loop I gain**									
RW	Uni								US	
OL	⇳	0 to 30,000			⇨	All voltage ratings: 40				
CL	⇳				⇨	200V drive: 1,000 400V drive: 2,000 575V drive: 2,400 690V drive: 3,000				

These parameters control the proportional and integral gains of the current controller used in the open loop drive. The current controller either provides current limits or closed loop torque control by modifying the drive output frequency. The control loop is also used in its torque mode during line power supply loss, or when the controlled mode standard ramp is active and the drive is decelerating, to regulate the flow of current into the drive.

0.40 {5.12}	**Autotune**									
RW	Uni									
OL	⇳	0 to 2			⇨	0				
VT	⇳	0 to 4			⇨	0				
SV	⇳	0 to 6			⇨	0				

Open-Loop

There are two autotune tests available in open loop mode, a stationary and a rotating test. A rotating autotune should be used whenever possible, so the measured value of power factor of the motor is used by the drive.

- The stationary autotune can be used when the motor is loaded and it is not possible to remove the load from the motor shaft.
- A rotating autotune first performs a stationary autotune, before rotating the motor at $^2/_3$ base speed in the forward direction for several seconds. The motor must be free from load for the rotating autotune.

To perform an autotune, set Pr **0.40** to 1 for a stationary test or 2 for a rotating test, and provide the drive with both an enable signal (on terminal 31) and a run signal (on terminal 26 or 27).

Following the completion of an autotune test the drive will go into the inhibit state. The drive must be placed into a controlled disable condition before the drive can be made to run at the required reference. The drive can be put in to a controlled disable condition by removing the SAFE TORQUE OFF signal from terminal 31, setting the drive enable parameter Pr **6.15** to OFF (0) or disabling the drive via the control word (Pr **6.42** & Pr **6.43**).

For further information refer to section *Pr 0.40 {5.12} Autotune* on page 137.

Closed-loop

There are three autotune tests available in closed loop vector mode, a stationary test, a rotating test and an inertia measurement test. A stationary autotune will give moderate performance whereas a rotating autotune will give improved performance as it measures the actual values of the motor parameters required by the drive. An inertia measurement test should be performed separately to a stationary or rotating autotune.

- The stationary autotune can be used when the motor is loaded and it is not possible to remove the load from the motor shaft.
- A rotating autotune first performs a stationary autotune, before rotating the motor at $^2/_3$ base speed in the forward direction for approximately 30 seconds. The motor must be free from load for the rotating autotune.

- The inertia measurement test can measure the total inertia of the load and the motor. This is used to set the speed loop gains (see *Speed loop gains*, below) and to provide torque feed forwards when required during acceleration. During the inertia measurement test the motor speed changes from $^{1}/_{3}$ to $^{2}/_{3}$ rated speed in the forward direction several times. The motor can be loaded with a constant torque load and still give an accurate result, however, non-linear loads and loads that change with speed will cause measurement errors.

To perform an autotune, set Pr **0.40** to 1 for a stationary test, 2 for a rotating test, or 3 for an inertia measurement test and provide the drive with both an enable signal (on terminal 31) and a run signal (on terminal 26 or 27).

Following the completion of an autotune test the drive will go into the inhibit state. The drive must be placed into a controlled disable condition before the drive can be made to run at the required reference. The drive can be put in to a controlled disable condition by removing the SAFE TORQUE OFF signal from terminal 31, setting the drive enable parameter Pr **6.15** to OFF (0) or disabling the drive via the control word (Pr **6.42** & Pr **6.43**).

Setting Pr **0.40** to 4 will cause the drive to calculate the current loop gains based on the previously measured values of motor resistance and inductance. The drive does apply any voltage to the motor during this test. The drive will change Pr **0.40** back to 0 as soon as the calculations are complete (approximately 500ms).

For further information refer to section *Pr 0.40 {5.12} Autotune* on page 140.

Servo

There are five autotune tests available in servo mode, a short low speed test, a normal low speed test, an inertia measurement test, a stationary test and a minimal movement test. A normal low speed should be done where possible as the drive measures the stator resistance and inductance of the motor, and from these calculates the current loop gains. An inertia measurement test should be performed separately to a short low speed or normal low speed autotune.

- A short low speed test will rotate the motor by 2 electrical revolutions (i.e. up to 2 mechanical revolutions) in the forward direction, and measure the encoder phase angle. The motor must be free from load for this test.
- A normal low speed test will rotate the motor by 2 electrical revolutions (i.e. up to 2 mechanical revolutions) in the forward direction. This test measures the encoder phase angle and updates other parameters including the current loop gains. The motor must be free from load for this test.
- The inertia measurement test can measure the total inertia of the load and the motor. This is used to set the speed loop gains and to provide torque feed forwards when required during acceleration. During the inertia measurement test the motor speed changes from $^{1}/_{3}$ to $^{2}/_{3}$ rated speed in the forward direction several times. The motor can be loaded with a constant torque load and still give an accurate result, however, non-linear loads and loads that change with speed will cause measurement errors.
- The stationary test only measures the motor resistance and inductance, and updates the current loop gain parameters. This test does not measure the encoder phase angle so this test needs to be done in conjunction with either the short low speed or minimal movement tests.
- The minimal movement test will move the motor through a small angle to measure the encoder phase angle. This test will operate correctly when the load is an inertia, and although a small amount of cogging and stiction is acceptable, this test cannot be used for a loaded motor.

To perform an autotune, set Pr **0.40** to 1 for a short low speed test, 2 for a normal low speed test, 3 for an inertia measurement test, 4 for a stationary test or 5 for a minimal movement test, and provide the drive with both an enable signal (on terminal 31) and a run signal (on terminal 26 or 27).

Following the completion of an autotune test the drive will go into the inhibit state. The drive must be placed into a controlled disable condition before the drive can be made to run at the required reference. The drive can be put in to a controlled disable condition by removing the SAFE TORQUE OFF signal from terminal 31, setting the drive enable parameter Pr **6.15** to OFF (0) or disabling the drive via the control word (Pr **6.42** & Pr **6.43**).

Setting Pr **0.40** to 6 will cause the drive to calculate the current loop gains based on the previously measured values of motor resistance and inductance. The drive does apply any voltage to the motor during this test. The drive will change Pr **0.40** back to 0 as soon as the calculations are complete (approximately 500ms).

For further information refer to section *Pr 0.40 {5.12} Autotune* on page 145.

0.41 {5.18}	**Maximum switching frequency**									
RW	Txt				RA			US		
OL	⇳	3 (0), 4 (1), 6 (2), 8 (3), 12 (4), 16 (5) kHz			⇨	3 (0)				
CL	⇳				⇨	**VT**	3 (0)			
						SV	6 (2)			

This parameter defines the required switching frequency. The drive may automatically reduce the actual switching frequency (without changing this parameter) if the power stage becomes too hot. A thermal model of the IGBT junction temperature is used based on the heatsink temperature and an instantaneous temperature drop using the drive output current and switching frequency. The estimated IGBT junction temperature is displayed in Pr **7.34**. If the temperature exceeds 145°C the switching frequency is reduced if this is possible (i.e >3kHz). Reducing the switching frequency reduces the drive losses and the junction temperature displayed in Pr **7.34** also reduces. If the load condition persists the junction temperature may continue to rise again above 145°C and the drive cannot reduce the switching frequency further the drive will initiate an 'O.ht1' trip. Every second the drive will attempt to restore the switching frequency to the level set in Pr **0.41**.

The full range of switching frequencies is not available on all ratings of Unidrive SP. See section 8.5 *Switching frequency* on page 148, for the maximum available switching frequency for each drive rating.

6.2.7 Motor parameters

0.42 {5.11}	**No. of motor poles**									
RW	Txt							US		
OL	⇳	0 to 60 (Auto to 120 Pole)			⇨	Auto (0)				
CL	⇳				⇨	**VT**	Auto (0)			
						SV	6 POLE (3)			

Open-loop

This parameter is used in the calculation of motor speed, and in applying the correct slip compensation. When auto is selected, the number of motor poles is automatically calculated from the rated frequency (Pr **0.47**) and the rated full load rpm (Pr **0.45**). The number of poles = 120 * rated frequency / rpm rounded to the nearest even number.

Closed-loop vector

This parameter must be set correctly for the vector control algorithms to operate correctly. When auto is selected, the number of motor poles is automatically calculated from the rated frequency (Pr **0.47**) and the rated full load rpm (Pr **0.45**). The number of poles = 120 * rated frequency / rpm rounded to the nearest even number.

Servo

This parameter must be set correctly for the vector control algorithms to operate correctly. When auto is selected the number of poles is set to 6.

0.43 {5.10}	Motor rated power factor									
RW	Uni							US		
OL	⇳	0.000 to 1.000			⇨	0.850				
VT	⇳				⇨					

The power factor is the true power factor of the motor, i.e. the angle between the motor voltage and current.

Open-loop

The power factor is used in conjunction with the motor rated current (Pr **0.46**) to calculate the rated active current and magnetizing current of the motor. The rated active current is used extensively to control the drive, and the magnetizing current is used in vector mode Rs compensation. It is important that this parameter is set up correctly.

This parameter is obtained by the drive during a rotational autotune. If a stationary autotune is carried out, then the nameplate value should be entered in Pr **0.43**.

Closed-loop vector

If the stator inductance (Pr **5.25**) contains a non-zero value, the power factor used by the drive is continuously calculated and used in the vector control algorithms (this will not update Pr **0.43**).

If the stator inductance is set to zero (Pr **5.25**) then the power factor written in Pr **0.43** is used in conjunction with the motor rated current and other motor parameters to calculate the rated active and magnetizing currents which are used in the vector control algorithm.

This parameter is obtained by the drive during a rotational autotune. If a stationary autotune is carried out, then the nameplate value should be entered in Pr **0.43**.

0.43 {3.25}	Encoder phase angle									
RW	Uni							US		
SV	⇳	0.0 to 359.9°			⇨	0.0				

The phase angle between the rotor flux in a servo motor and the encoder position is required for the motor to operate correctly. If the phase angle is known it can be set in this parameter by the user. Alternatively the drive can automatically measure the phase angle by performing a phasing test (see autotune in servo mode Pr **0.40**). When the test is complete the new value is written to this parameter. The encoder phase angle can be modified at any time and becomes effective immediately. This parameter has a factory default value of 0.0, but is not affected when defaults are loaded by the user.

0.44 {5.09}	Motor rated voltage									
RW	Uni				RA			US		
⇳	0 to AC_VOLTAGE_SET_MAX V				⇨	200V drive: 230 400V drive: EUR> 400 USA> 460 575V drive: 575 690V drive: 690				

Open-loop & Closed-loop vector

Enter the value from the rating plate of the motor.

0.45 {5.08}	Motor rated full load speed (rpm)									
RW	Uni							US		
OL	⇳	0 to 180,000 rpm			⇨	EUR> 1,500 USA> 1,800				
VT	⇳	0.00 to 40,000.00 rpm			⇨	EUR> 1,450.00 USA> 1,770.00				

Open-loop

This is the speed at which the motor would rotate when supplied with its base frequency at rated voltage, under rated load conditions (= synchronous speed - slip speed). Entering the correct value into this parameter allows the drive to increase the output frequency as a function of load in order to compensate for this speed drop.

Slip compensation is disabled if Pr **0.45** is set to 0 or to synchronous speed, or if Pr **5.27** is set to 0.

If slip compensation is required this parameter should be set to the value from the rating plate of the motor, which should give the correct rpm for a hot machine. Sometimes it will be necessary to adjust this when the drive is commissioned because the nameplate value may be inaccurate. Slip compensation will operate correctly both below base speed and within the field weakening region. Slip compensation is normally used to correct for the motor speed to prevent speed variation with load. The rated load rpm can be set higher than synchronous speed to deliberately introduce speed droop. This can be useful to aid load sharing with mechanically coupled motors.

Closed loop vector

Rated load rpm is used with motor rated frequency to determine the full load slip of the motor which is used by the vector control algorithm. Incorrect setting of this parameter can result in the following:

- Reduced efficiency of motor operation
- Reduction of maximum torque available from the motor
- Failure to reach maximum speed
- Over-current trips
- Reduced transient performance
- Inaccurate control of absolute torque in torque control modes

The nameplate value is normally the value for a hot machine, however, some adjustment may be required when the drive is commissioned if the nameplate value is inaccurate.
The rated full load rpm can be optimized by the drive (For further information, refer to section 8.1.3 *Closed loop vector motor control* on page 142).

0.45 {4.15}	Motor thermal time constant									
RW	Uni							US		
SV	⇳	0 to 3000.0			⇨	20.0				

Servo

Pr **0.45** is the motor thermal time constant of the motor, and is used (along with the motor rated current Pr **0.46**, and total motor current Pr **0.12**) in the thermal model of the motor in applying thermal protection to the motor.

Setting this parameter to 0 disables the motor thermal protection.

For further details, refer to section 8.4 *Motor thermal protection* on page 147.

0.46 {5.07}	Motor rated current									
RW	Uni				RA			US		
⇳	0 to Rated_current_max A				⇨	Drive rated current [**11.32**]				

Enter the name-plate value for the motor rated current.

0.47 {5.06}	Rated frequency									
RW	Uni							US		
OL	⇳	0 to 3,000.0Hz			⇨	EUR> 50.0, USA> 60.0				
VT	⇳	0 to 1,250.0Hz			⇨	EUR> 50.0, USA> 60.0				

Open-loop & Closed-loop vector

Enter the value from the rating plate of the motor.

6.2.8 Operating-mode selection

0.48 {11.31}	Operating mode selector								
RW	Txt	NC					PT		
⇳	1 to 4			⇨	**OL**	1			
					VT	2			
					SV	3			

The settings for Pr **0.48** are as follows:

Setting		Operating mode
OPEn LP	1	Open-loop
CL VECt	2	Closed-loop vector
SerVO	3	Servo
rEgEn	4	Regen

This parameter defines the drive operating mode. Pr **xx.00** must be set to 1253 (European defaults) or 1254 (USA defaults) before this parameter can be changed. When the drive is reset to implement any change in this parameter, the default settings of all parameters will be set according to the drive operating mode selected and saved in memory.

6.2.9 Status information

0.49 {11.44}	Security status								
RW	Txt						PT	US	
⇳	0 to 2				⇨	0			

This parameter controls access via the drive keypad as follows:

Value	String	Action
0	L1	Only menu 0 can be accessed
1	L2	All menus can be accessed
2	Loc	Lock user security when drive is reset. (This parameter is set to L1 after reset.)

The keypad can adjust this parameter even when user security is set.

0.50 {11.29}	Software version number									
RO	Uni					NC	PT			
⇳	1.00 to 99.99				⇨					

The parameter displays the software version of the drive.

0.51 {10.37}	Action on trip detection								
RW	Uni							US	
⇳	0 to 15				⇨	0			

Each bit in this parameter has the following functions:

Bit	Function
0	Stop on non-important trips
1	Disable braking IGBT trips
2	Disable phase loss trip (Unidrive SP size 0 only)
3	Disable braking resistor temperature monitoring failure detection. (Unidrive SP size 0 only)

Example

Pr **10.37**=8 (1000_{binary}) br.th trip is disabled

Pr **10.37**=12 (1100_{binary}) br.th and phase loss trip is disabled

Stop on non-important trips

If bit 0 is set to zero then the drive simply trips when a non-important trip occurs. Non-important trips are: th, ths, Old1, cL2, cL3, SCL. If bit 0 is set to one the drive will stop before tripping when one of these trips is initiated, except in Regen mode where the drive trips immediately.

Disable braking IGBT trips

For details of braking IGBT trip mode see Pr **10.31**.

Disable phase loss trip (size 0 only)

The user can disable the phase loss trip in 200V size 0 drives as these are allowed to operate from a single phase supply. If bit 2 is set to zero the phase loss trip is enabled. If bit 2 is set to one the phase loss trip is disabled in 200V size 0 drives only.

Disable braking resistor temperature monitoring failure detection (size 0 only)

Size 0 drives have an internal user install braking resistor with a thermistor to detect overheating of the resistor. As default bit 3 of Pr **10.37** is set to zero, and so if the braking resistor and its thermistor is not installed the drive will produce a trip (br.th) because the thermistor appears to be open-circuit. This trip can be disabled so that the drive can run by setting bit 3 of Pr **10.37** to one. If the resistor is installed then no trip is produced unless the thermistor fails, and so bit 3 of Pr **10.37** can be left at zero. This feature only applies to size 0 drives. For example if Pr **10.37** = 8, then br.th trip will be disabled.

7 Running the motor

This chapter takes the new user through all the essential steps to running a motor for the first time, in each of the possible operating modes.

For information on tuning the drive for the best performance, see *Chapter 8 Optimization* .

WARNING

Ensure that no damage or safety hazard could arise from the motor starting unexpectedly.

CAUTION

The values of the motor parameters affect the protection of the motor.
The default values in the drive should not be relied upon.
It is essential that the correct value is entered in Pr **0.46** *Motor rated current*. This affects the thermal protection of the motor.

CAUTION

If the keypad mode has been used previously, ensure that the keypad reference has been set to 0 using the buttons as if the drive is started using the keypad it will run to the speed defined by the keypad reference (Pr **1.17**).

WARNING

If the intended maximum speed affects the safety of the machinery, additional independent over-speed protection must be used.

7.1 Quick start Connections

7.1.1 Basic requirements

This section shows the basic connections which must be made for the drive to run in the required mode. For minimal parameter settings to run in each mode please see the relevant part of section 7.3 *Quick Start commissioning/start-up* on page 126.

Table 7-1 Minimum control connection requirements for each control mode

Drive control method	Requirements
Terminal mode	Drive Enable Speed reference Run forward or run reverse command
Keypad mode	Drive Enable
Serial communications	Drive Enable Serial communications link

Table 7-2 Minimum control connection requirements for each mode of operation

Operating mode	Requirements
Open loop mode	Induction motor
Closed loop vector - RFC mode	Induction motor
Closed loop vector mode	Induction motor with speed feedback
Closed loop servo mode	Permanent magnet motor with speed and position feedback

Speed feedback
Suitable devices are:
- Incremental encoder (A, B or F, D with or without Z)
- Incremental encoder with forward and reverse outputs (F, R with or without Z)
- SINCOS encoder (with, or without Stegmann Hiperface, EnDat or SSI communications protocols)
- EnDat absolute encoder

Speed and position feedback
Suitable devices are:
- Incremental encoder (A, B or F, D with or without Z) with commutation signals (U, V, W)
- Incremental encoder with forward and reverse outputs (F, R with or without Z) and commutation outputs (U, V, W)
- SINCOS encoder (with Stegmann Hiperface, EnDat or SSI communications protocols)
- EnDat absolute encoder

For Solutions Module terminal information see section 11.15 *Menus 15, 16 and 17: Solutions Module set-up* on page 217 or the appropriate Solutions Module option user guide.

7.2 Changing the operating mode

Changing the operating mode returns all parameters to their default value, including the motor parameters. (Pr **0.49** and Pr **0.34** are not affected by this procedure.)

Procedure
Use the following procedure only if a different operating mode is required:

1. Enter either of the following values in Pr **xx.00**, as appropriate:
   1253 (EUR, 50Hz AC supply frequency)
   1254 (USA, 60Hz AC supply frequency)
2. Change the setting of Pr **0.48** as follows:

Pr 0.48 setting		Operating mode
0.48 OPEn LP	1	Open-loop
0.48 CL VECt	2	Closed-loop vector and RFC
0.48 SErvO	3	Closed-loop Servo
0.48 rEGEn	4	Regen (See the *Unidrive SP Regen Installation Guide* for more information about operating in this mode)

The figures in the second column apply when serial communications are used.

3. Either:

- Press the red reset button
- Toggle the reset digital input
- Carry out a drive reset through serial communications by setting Pr **10.38** to 100 (ensure that Pr. **xx.00** returns to 0).

Figure 7-1 Minimum connections to get the motor running in any operating mode (size 0)

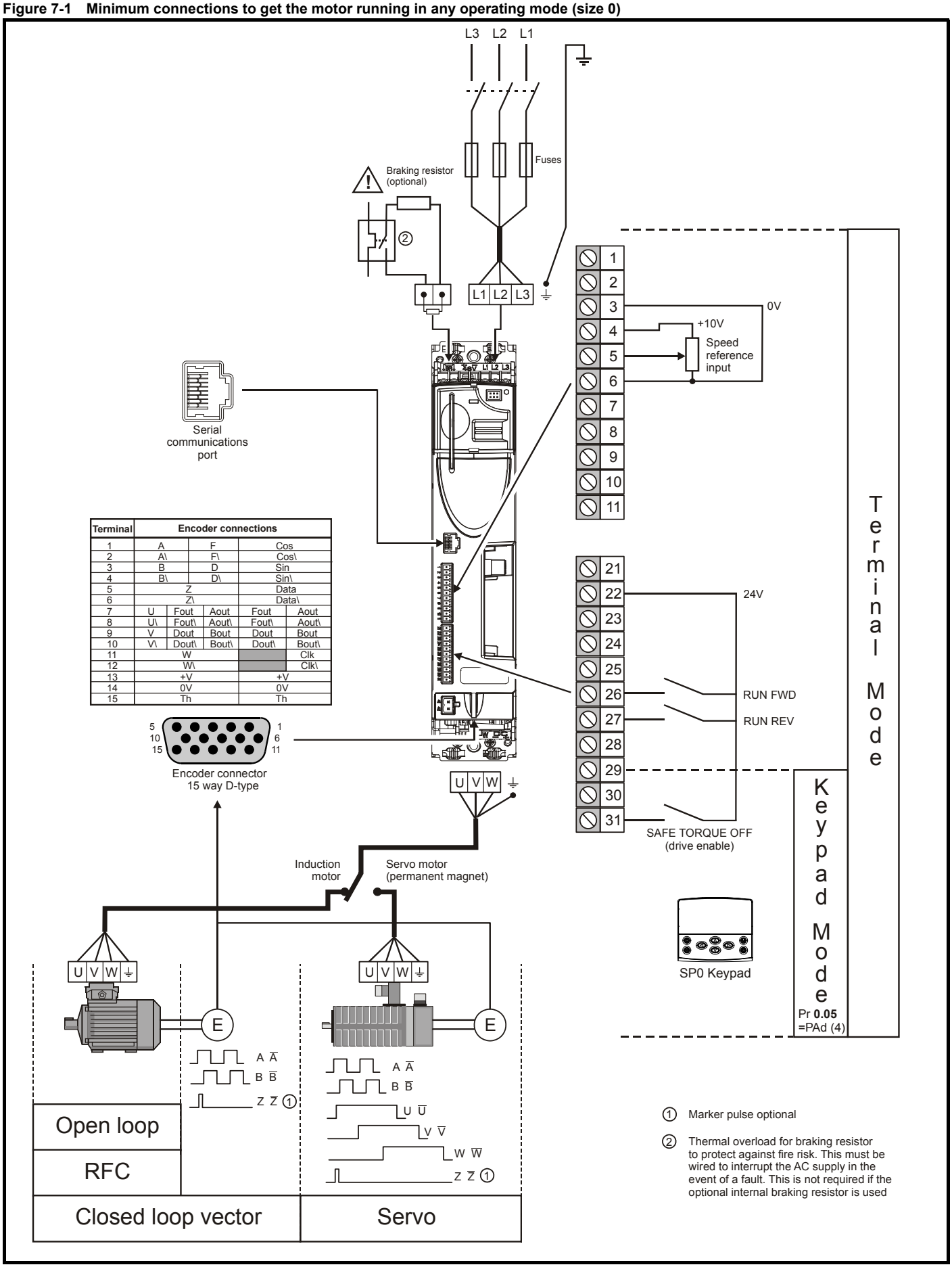

Terminal	Encoder connections				
1	A		F	Cos	
2	A\		F\	Cos\	
3	B		D	Sin	
4	B\		D\	Sin\	
5	Z			Data	
6	Z\			Data\	
7	U	Fout	Aout	Fout	Aout
8	U\	Fout\	Aout\	Fout\	Aout\
9	V	Dout	Bout	Dout	Bout
10	V\	Dout\	Bout\	Dout\	Bout\
11	W				Clk
12	W\				Clk\
13	+V			+V	
14	0V			0V	
15	Th			Th	

Figure 7-2 Minimum connections to get the motor running in any operating mode (size 1 to 3)

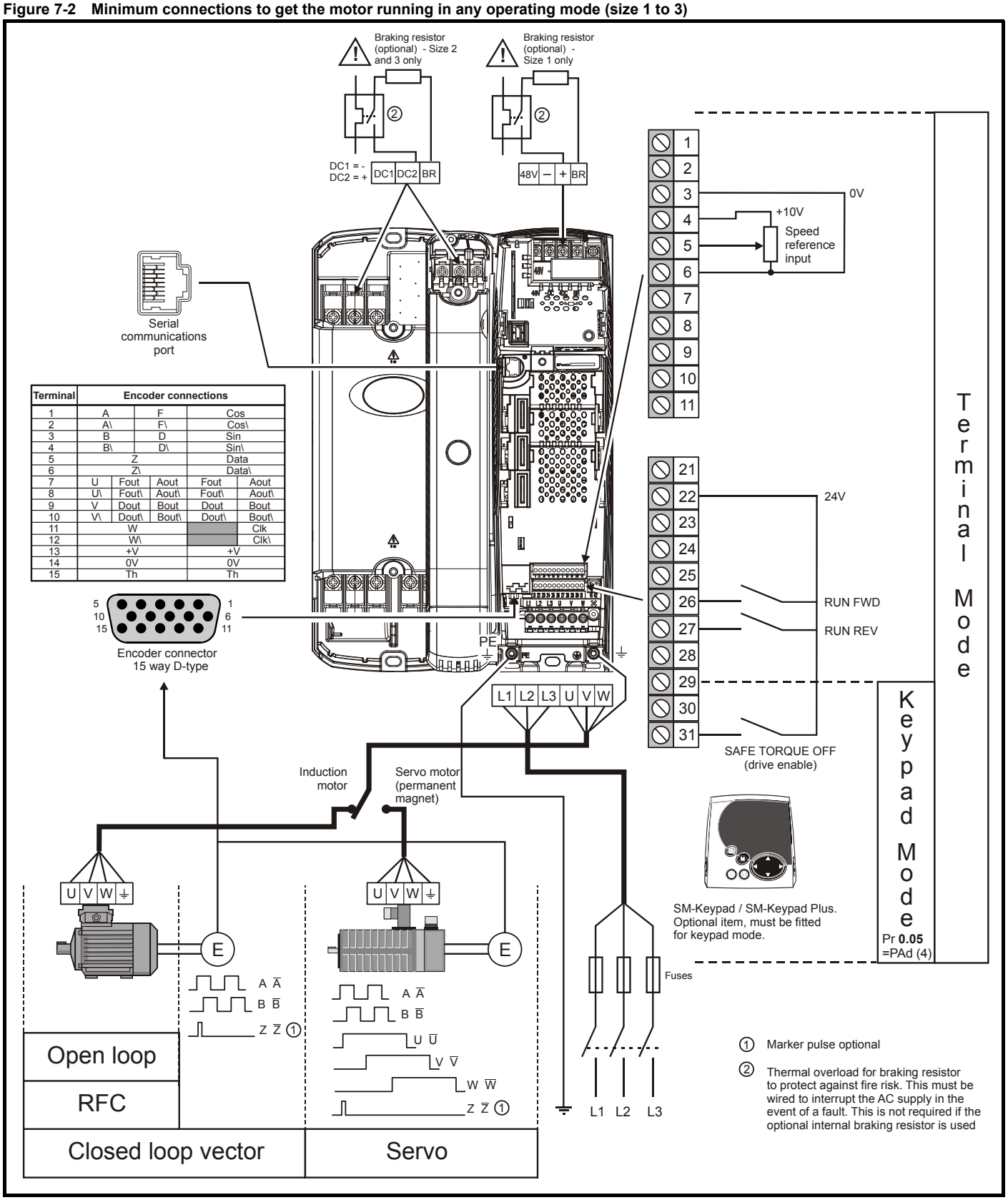

Figure 7-3 Minimum connections to get the motor running in any operating mode (size 4 to 6)

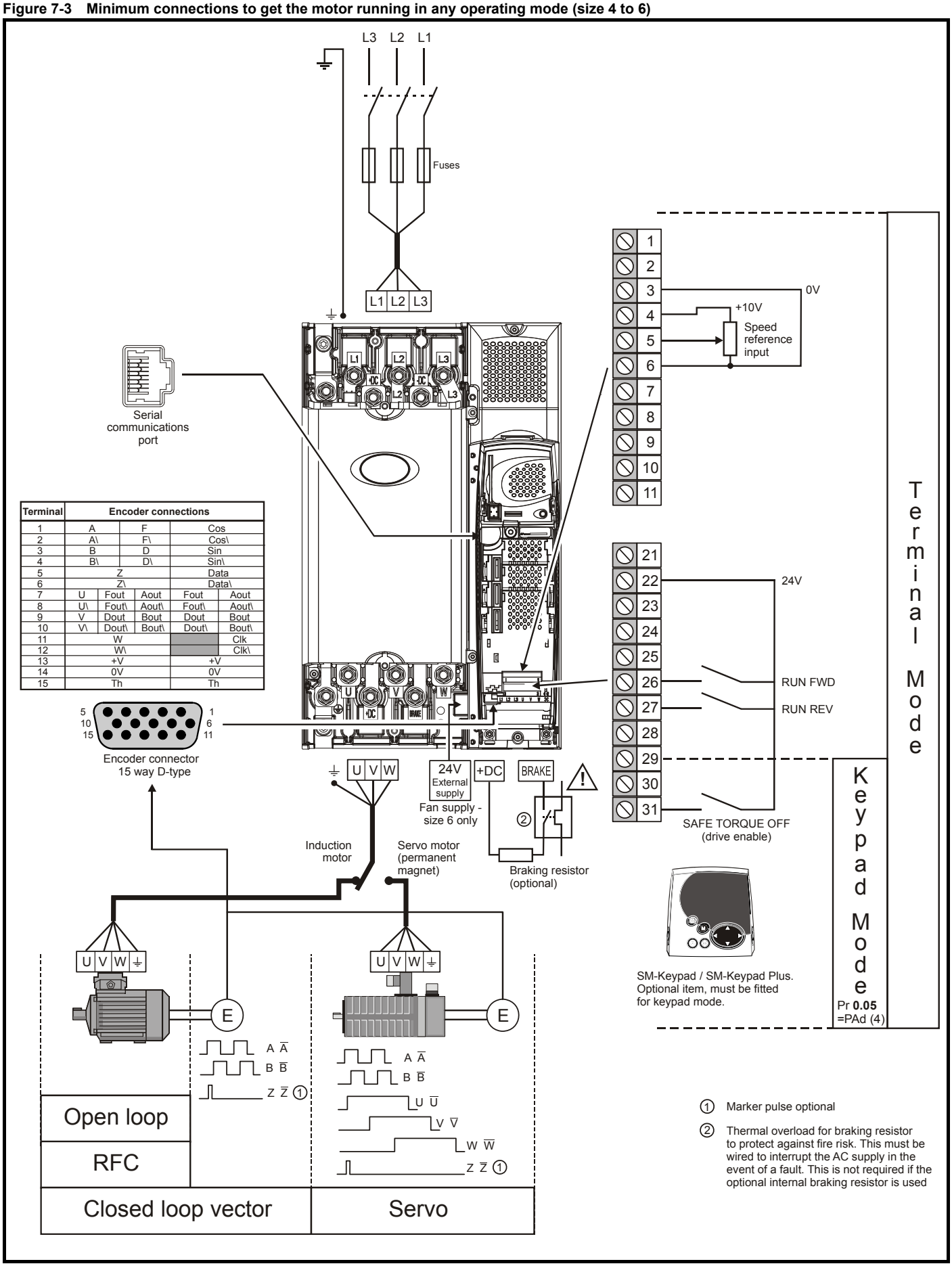

Terminal	Encoder connections				
1	A		F	Cos	
2	A\		F\	Cos\	
3	B		D	Sin	
4	B\		D\	Sin\	
5	Z			Data	
6	Z\			Data\	
7	U	Fout	Aout	Fout	Aout
8	U\	Fout\	Aout\	Fout\	Aout\
9	V	Dout	Bout	Dout	Bout
10	V\	Dout\	Bout\	Dout\	Bout\
11	W				Clk
12	W\				Clk\
13	+V			+V	
14	0V			0V	
15	Th			Th	

7.3 Quick Start commissioning/start-up

7.3.1 Open loop

Action	Detail	
Before power-up	Ensure: • Size 0 only, ensure that the ingress protection labels have been removed. See section 3.13 *Routine maintenance* on page 66 for more information. • The drive enable signal is not given (terminal 31) • Run signal is not given • Motor is connected	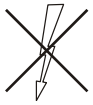
Power-up the drive	Verify that Open Loop mode is displayed as the drive powers up. If the mode is incorrect see section 5.6 *Changing the operating mode* on page 104. If a motor thermistor is not connected and the drive trips on 'th' set Pr **0.21** = VOLt and press the red reset button. Ensure: • Drive displays 'inh' If the drive trips, see Chapter 13 *Diagnostics* on page 283. Size 0 only: If no internal braking resistor is installed, then the drive will trip 'br.th'. If no internal braking resistor is required, then set Pr **0.51** to 8 to disable the trip.	
Enter motor nameplate details	Enter: • Motor rated frequency in Pr **0.47** (Hz) • Motor rated current in Pr **0.46** (A) • Motor rated speed in Pr **0.45** (rpm) • Motor rated voltage in Pr **0.44** (V) - check if ⅄ or △ connection	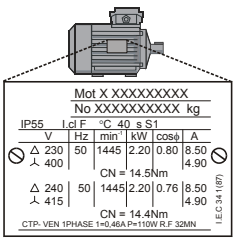
Set maximum frequency	Enter: • Maximum frequency in Pr **0.02** (Hz)	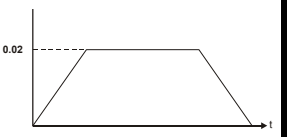
Set acceleration / deceleration rates	Enter: • Acceleration rate in Pr **0.03** (s/100Hz) • Deceleration rate in Pr **0.04** (s/100Hz) (If braking resistor installed, set Pr **0.15** = FAST. Also ensure Pr **10.30** and Pr **10.31** are set correctly, otherwise premature 'It.br' trips may be seen.)	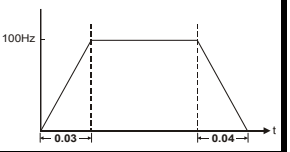
Autotune	The drive is able to perform either a stationary or a rotating autotune. The motor must be at a standstill before an autotune is enabled. A rotating autotune should be used whenever possible so the measured value of power factor of the motor is used by the drive. **WARNING** A rotating autotune will cause the motor to accelerate up to $^2/_3$ base speed in the direction selected regardless of the reference provided. Once complete the motor will coast to a stop. The enable signal must be removed before the drive can be made to run at the required reference. The drive can be stopped at any time by removing the run signal or removing the drive enable. • A stationary autotune can be used when the motor is loaded and it is not possible to uncouple the load from the motor shaft. A stationary autotune measures the stator resistance of the motor and the voltage offset in the drive. These are required for good performance in vector control modes. A stationary autotune does not measure the power factor of the motor so the value on the motor nameplate must be entered into Pr **0.43**. • A rotating autotune should only be used if the motor is uncoupled. A rotating autotune first performs a stationary autotune before rotating the motor at $^2/_3$ base speed in the direction selected. The rotating autotune measures the power factor of the motor. To perform an autotune: • Set Pr **0.40** = 1 for a stationary autotune or set Pr **0.40** = 2 for a rotating autotune • Close the Drive Enable signal (terminal 31). The drive will display 'rdY'. • Close the run signal (terminal 26 or 27). The lower display will flash 'Auto' and 'tunE' alternatively, while the drive is performing the autotune. • Wait for the drive to display 'rdY' or 'inh' and for the motor to come to a standstill. If the drive trips, see Chapter 13 *Diagnostics* on page 283. Remove the drive enable and run signal from the drive.	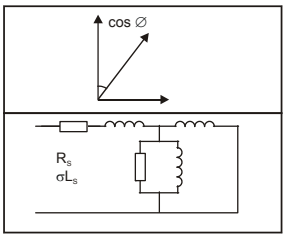
Save parameters	Enter 1000 in Pr **xx.00** Press the red reset button or toggle the reset digital input (ensure Pr **xx.00** returns to 0)	
Run	Drive is now ready to run	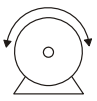

7.3.2 RFC mode

Software V01.10.00 or later should be used for RFC mode.

Induction motor

Action	Detail	
Before power-up	Ensure: • Size 0 only, ensure that the ingress protection labels have been removed. See section 3.13 *Routine maintenance* on page 66 for more information. • Drive Enable signal is not given (terminal 31) • Run signal is not given • Motor and feedback device are connected	
Power-up the drive	Verify that Closed Loop mode is displayed as the drive powers up. If the mode is incorrect see section 5.6 *Changing the operating mode* on page 104. If a motor thermistor is not connected and the drive trips on 'th' set Pr **0.21** = VOLt and press the red reset button. Ensure: • Drive displays 'inh' • Set the drive to closed loop vector mode. See section 5.6 *Changing the operating mode* on page 104 for more information If the drive trips, see Chapter 13 *Diagnostics* on page 283. Size 0 only: If no internal braking resistor is installed, then the drive will trip 'br.th'. If no internal braking resistor is required, then set Pr **0.51** to 8 to disable the trip.	
Select RFC mode and disable encoder wire-break trip	• Set Pr **3.24** = 1 or 3 to select RFC mode • Set Pr **3.40** = 0	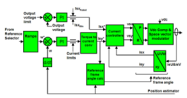
Enter motor nameplate details	Enter: • Motor rated frequency in Pr **0.47** (Hz) • Motor rated current in Pr **0.46** (A) • Motor rated speed (base speed - slip speed) in Pr **0.45** (rpm) • Motor rated voltage in Pr **0.44** (V) - check if ⅄ or △ connection	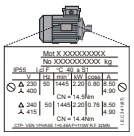
Set maximum speed	Enter: • Maximum speed in Pr **0.02** (rpm)	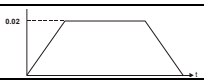
Set acceleration / deceleration rates	Enter: • Acceleration rate in Pr **0.03** (s/1000rpm) • Deceleration rate in Pr **0.04** (s/1000rpm) (If braking resistor installed, set Pr **0.15** = FAST. Also ensure Pr **10.30** and Pr **10.31** are set correctly, otherwise premature 'It.br' trips may be seen.)	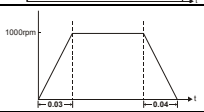
Select or deselect catch a spinning motor mode	If catch a spinning motor mode is not required then set Pr **6.09** to 0. If catch a spinning motor mode is required then leave Pr **6.09** at the default of 1, but depending on the size of the motor the value in Pr **5.40** may need to be adjusted. Pr **5.40** defines a scaling function used by the algorithm that detects the speed of the motor. The default value of Pr **5.40** is 1 which is suitable for small motors (<4kW). For larger motors the value in Pr **5.40** will need to be increased. Approximate values of Pr **5.40** for different motor sizes are as follows, 2 for 11kW, 3 for 55kW and 5 for 150kW. If the value of Pr **5.40** is too large the motor may accelerate from standstill when the drive is enabled. If the value of this parameter is too small the drive will detect the motor speed as zero even if the motor is spinning.	

Action	Detail	
Autotune	The drive is able to perform either a stationary or a rotating autotune. The motor must be at a standstill before an autotune is enabled. A stationary autotune will give moderate performance whereas a rotating autotune will give improved performance as it measures the actual values of the motor parameters required by the drive. **NOTE** It is highly recommended that a rotating autotune is performed (Pr **0.40** set to 2). **WARNING** A rotating autotune will cause the motor to accelerate up to $^2/_3$ base speed in the direction selected regardless of the reference provided. Once complete the motor will coast to a stop. The enable signal must be removed before the drive can be made to run at the required reference. The drive can be stopped at any time by removing the run signal or removing the drive enable. • A stationary autotune can be used when the motor is loaded and it is not possible to uncouple the load from the motor shaft. The stationary autotune measures the stator resistance and transient inductance of the motor. These are used to calculate the current loop gains, and at the end of the test the values in Pr **0.38** and Pr **0.39** are updated. A stationary autotune does not measure the power factor of the motor so the value on the motor nameplate must be entered into Pr **0.43**. • A rotating autotune should only be used if the motor is uncoupled. A rotating autotune first performs a stationary autotune before rotating the motor at $^2/_3$ base speed in the direction selected. The rotating autotune measures the stator inductance of the motor and calculates the power factor. To perform an autotune: • Set Pr **0.40** = 1 for a stationary autotune or set Pr **0.40** = 2 for a rotating autotune • Close the Drive Enable signal (terminal 31). The drive will display 'rdY'. • Close the run signal (terminal 26 or 27). The lower display will flash 'Auto' and 'tunE' alternatively, while the drive is performing the autotune. • Wait for the drive to display 'rdY' or 'inh' and for the motor to come to a standstill If the drive trips, see Chapter 13 *Diagnostics* on page 283. Remove the drive enable and run signal from the drive.	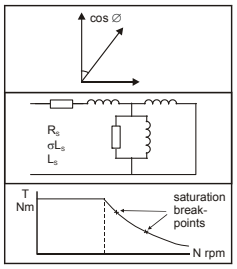
Save parameters	Enter 1000 in Pr **xx.00** Press the red reset button or toggle the reset digital input (ensure Pr **xx.00** returns to 0)	
Run	Drive is now ready to run	

7.3.3 Closed loop vector mode

Induction motor with incremental encoder feedback

For simplicity only an incremental quadrature encoder will be considered here. For information on setting up one of the other supported speed feedback devices, refer to section 7.5 *Setting up a feedback device* on page 133.

Action	Detail	
Before power-up	Ensure: • Size 0 only, ensure that the ingress protection labels have been removed. See section 3.13 *Routine maintenance* on page 66 for more information. • Drive Enable signal is not given (terminal 31) • Run signal is not given • Motor and feedback device are connected	
Power-up the drive	Verify that Closed Loop mode is displayed as the drive powers up. If the mode is incorrect see section 5.6 *Changing the operating mode* on page 104. If a motor thermistor is not connected and the drive trips on 'th' set Pr **0.21** = VOLt and press the red reset button. Ensure: • Drive displays 'inh' • Set the drive to closed loop vector mode. See *section 5.6 Changing the operating mode* on page 104 for more information If the drive trips, see Chapter 13 *Diagnostics* on page 283. Size 0 only: If no internal braking resistor is installed, then the drive will trip 'br.th'. If no internal braking resistor is required, then set Pr **0.51** to 8 to disable the trip.	
Set motor feedback parameters	**Incremental encoder basic set-up** Enter: • Drive encoder type in Pr **3.38** = Ab (0): Quadrature encoder • Encoder power supply in Pr. **3.36** = 5V (0), 8V (1) or 15V (2). **NOTE** If output voltage from the encoder is >5V, then the termination resistors must be disabled Pr **3.39** to 0. **CAUTION** Setting the encoder voltage supply too high for the encoder could result in damage to the feedback device. • Drive encoder Lines Per Revolution (LPR) in Pr **3.34** (set according to encoder) • Drive encoder termination resistor setting in Pr. **3.39**: **0** = A-A\, B-B\, Z-Z\ termination resistors disabled **1** = A-A\, B-B\, termination resistors enabled, Z-Z\ termination resistors disabled **2** = A-A\, B-B\, Z-Z\ termination resistors enabled	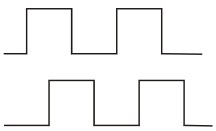
Enter motor nameplate details	Enter: • Motor rated frequency in Pr **0.47** (Hz) • Motor rated current in Pr **0.46** (A) • Motor rated speed (base speed - slip speed) in Pr **0.45** (rpm) • Motor rated voltage in Pr **0.44** (V) - check if ⅄ or △ connection	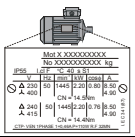
Set maximum speed	Enter: • Maximum speed in Pr **0.02** (rpm)	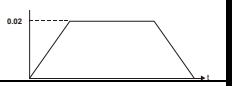
Set acceleration / deceleration rates	Enter: • Acceleration rate in Pr **0.03** (s/1000rpm) • Deceleration rate in Pr **0.04** (s/1000rpm) (If braking resistor installed, set Pr **0.15** = FAST. Also ensure Pr **10.30** and Pr **10.31** are set correctly, otherwise premature 'It.br' trips may be seen.)	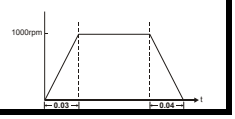

Action	Detail	
Autotune	Unidrive SP is able to perform either a stationary or a rotating autotune. The motor must be at a standstill before an autotune is enabled. A stationary autotune will give moderate performance whereas a rotating autotune will give improved performance as it measures the actual values of the motor parameters required by the drive. **WARNING** A rotating autotune will cause the motor to accelerate up to $^2/_3$ base speed in the direction selected regardless of the reference provided. Once complete the motor will coast to a stop. The enable signal must be removed before the drive can be made to run at the required reference. The drive can be stopped at any time by removing the run signal or removing the drive enable. • A stationary autotune can be used when the motor is loaded and it is not possible to uncouple the load from the motor shaft. The stationary autotune measures the stator resistance and transient inductance of the motor. These are used to calculate the current loop gains, and at the end of the test the values in Pr **0.38** and Pr **0.39** are updated. A stationary autotune does not measure the power factor of the motor so the value on the motor nameplate must be entered into Pr **0.43**. • A rotating autotune should only be used if the motor is uncoupled. A rotating autotune first performs a stationary autotune before rotating the motor at $^2/_3$ base speed in the direction selected. The rotating autotune measures the stator inductance of the motor and calculates the power factor. To perform an autotune: • Set Pr **0.40** = 1 for a stationary autotune or set Pr **0.40** = 2 for a rotating autotune • Close the Drive Enable signal (terminal 31). The drive will display 'rdY' • Close the run signal (terminal 26 or 27). The lower display will flash 'Auto' and 'tunE' alternatively, while the drive is performing the autotune. • Wait for the drive to display 'rdY' or 'inh' and for the motor to come to a standstill If the drive trips, see Chapter 13 *Diagnostics* on page 283. Remove the drive enable and run signal from the drive.	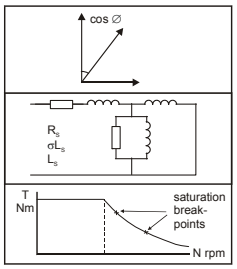
Save parameters	Enter 1000 in Pr **xx.00** Press the red reset button or toggle the reset digital input (ensure Pr **xx.00** returns to 0)	
Run	Drive is now ready to run	

7.3.4 Servo

Permanent magnet motor with a speed and position feedback device

For simplicity only an incremental quadrature encoder with commutation outputs will be considered here. For information on setting up one of the other supported speed feedback devices, refer to section 7.5 *Setting up a feedback device* on page 133.

Action	Detail	
Before power-up	Ensure: • Size 0 only, ensure that the ingress protection labels have been removed. See section 3.13 *Routine maintenance* on page 66 for more information. • Drive Enable signal is not given (terminal 31) • Run signal is not given • Motor is connected • Feedback device is connected	
Power-up the drive	Verify that Servo mode is displayed as the drive powers up. If the mode is incorrect see section 5.6 *Changing the operating mode* on page 104. If a motor thermistor is not connected and the drive trips on 'th' set Pr **0.21** = VOLt and press the red reset button. Ensure: • Drive displays 'inh' • Set the drive to servo mode. See section 5.6 *Changing the operating mode* on page 104 for more information If the drive trips, see Chapter 13 *Diagnostics* on page 283. Size 0 only: If no internal braking resistor is installed, then the drive will trip 'br.th'. If no internal braking resistor is required, then set Pr **0.51** to 8 to disable the trip.	
Set motor feedback parameters	**Incremental encoder basic set-up** Enter: • Drive encoder type in Pr. **3.38** = Ab.SErVO (3): Quadrature encoder with commutation outputs • Encoder power supply in Pr. **3.36** = 5V (0), 8V (1) or 15V (2). **NOTE** If output voltage from the encoder is >5V, then the termination resistors must be disabled Pr **3.39** to 0. **CAUTION** Setting the encoder voltage supply too high for the encoder could result in damage to the feedback device. • Drive encoder Pulses Per Revolution in Pr. **3.34** (set according to encoder) • Drive encoder termination resistor setting in Pr. **3.39**: **0** = A-A\, B-B\, Z-Z\ termination resistors disabled **1** = A-A\, B-B\, termination resistors enabled, Z-Z\ termination resistors disabled **2** = A-A\, B-B\, Z-Z\ termination resistors enabled	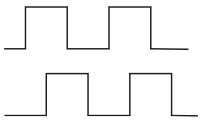
Enter motor nameplate details	Enter: • Motor rated current in Pr **0.46** (A) Ensure that this equal to or less than the Heavy Duty rating of the drive otherwise It.AC trips may occur during the autotune. • Number of poles in Pr **0.42**	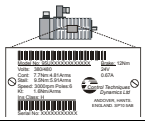
Set maximum speed	Enter: • Maximum speed in Pr **0.02** (rpm)	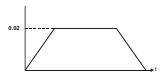
Set acceleration / deceleration rates	Enter: • Acceleration rate in Pr **0.03** (s/1000rpm) • Deceleration rate in Pr **0.04** (s/1000rpm) (If braking resistor installed, set Pr **0.15** = FAST. Also ensure Pr **10.30** and Pr **10.31** are set correctly, otherwise premature 'It.br' trips may be seen.)	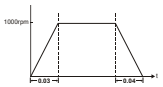
Autotune	Unidrive SP is able to perform a short low speed, a normal low speed or a minimal movement autotune. The motor must be at a standstill before an autotune is enabled. A normal low speed autotune will measure the encoder phase offset angle and calculate the current gains. **WARNING** The short low speed and normal low speed tests will rotate the motor by up to 2 revolutions in the direction selected, regardless of the reference provided. The minimal movement test will move the motor through an angle defined by Pr **5.38**. Once complete the motor will come to a standstill. The enable signal must be removed before the drive can be made to run at the required reference.The drive can be stopped at any time by removing the run signal or removing the Drive Enable. The motor must not be loaded when attempting an autotune. • The short low speed and normal low speed tests will rotate the motor by up to 2 rotations in the direction selected and the drive measures the encoder phase angle and updates the value in Pr **3.25**. The normal low speed test also measures the stator resistance, and inductance of the motor. These are used to calculate the current loop gains, and at the end of the test the values in Pr **0.38** and Pr **0.39** are updated. The short low speed test takes approximately 2s and the normal low speed test approximately 20s to complete. • The minimal movement autotune will move the motor through an angle defined by Pr **5.38**. The motor must not be loaded for this test although it will operate correctly when the load is an inertia. To perform an autotune: • Set Pr **0.40** = 1 for a short low speed autotune, Pr **0.40** = 2 for a normal low speed test or Pr **0.40** = 5 for a minimal movement autotune. • Close the run signal (terminal 26 or 27). • Close the Drive Enable signal (terminal 31). The lower display will flash 'Auto' and 'tunE' alternatively, while the drive is performing the test. • Wait for the drive to display 'rdy' or 'inh' and for the motor to come to a standstill. If the drive trips it cannot be reset until the drive enable signal (terminal 31) has been removed. See Chapter 13 *Diagnostics* on page 283. Remove the drive enabled and run signal from the drive.	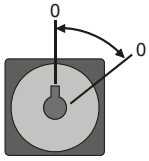

Action	Detail	
Save parameters	Enter 1000 in Pr **xx.00** Press the red reset button or toggle the reset digital input (ensure Pr **xx.00** returns to 0)	
Run	Drive is now ready to run	

7.4 Quick start commissioning/start-up (CTSoft)

CTSoft is a Windows™ based software commissioning/start-up tool for Unidrive SP and other Control Techniques products.

CTSoft can be used for commissioning/start-up and monitoring, drive parameters can be uploaded, downloaded and compared, and simple or custom menu listings can be created. Drive menus can be displayed in standard list format or as live block diagrams. CTSoft is able to communicate with a single drive or a network.

CTSoft can be found on the CD which is supplied with the drive and is also available for download from www.controltechniques.com (file size approximately 25MB).

CTSoft system requirements:

- Windows 7, 2000/XP/Vista. **Windows 95/98/98SE/ME/NT4 and Windows 2003 server are NOT supported**
- Internet Explorer V5.0 or later must be installed
- Minimum of 800x600 screen resolution with 256 colors. 1024x768 is recommended.
- 256 MB RAM
- Pentium IV 1000MHz or better recommended.
- Adobe Acrobat Reader 5.1 or later (for parameter help). See CD provided
- Microsoft.Net Frameworks 2.0
- Note that you must have full administrator rights to install CTSoft.

To install CTSoft from the CD, insert the CD and the auto-run facility should start up the front-end screen from which CTSoft can be selected. Otherwise run the SETUP.exe in the CTSoft folder. Any previous copy of CTSoft should be uninstalled before proceeding with the installation (existing projects will not be lost).

Included with CTSoft are the user guides for the supported drive models. When help on a particular parameter is request by the user, CTSoft links to the parameter in the relevant advanced user guides.

7.5 Setting up a feedback device

This section shows the parameter settings which must be made to use each of the compatible encoder types with Unidrive SP. For more information on the parameters listed here please refer to the *Unidrive SP Advanced User Guide*.

7.5.1 Overview

Table 7-3 Parameters required for feedback device set-up

Parameter		Ab, Fd, Fr, Ab.SErVO, Fd.SErVO, Fr.SErVO, or SC encoders	SC.HiPEr encoder	SC.EndAt or SC.SSI encoders	EndAt encoder	SSI encoder
3.33	Drive encoder turns		✓ x	✓ x	✓ x	✓
3.34	Drive encoder lines per revolution	✓	✓ x	✓ x		
3.35	Drive encoder comms resolution		✓ x	✓ x	✓ x	✓
3.36	Drive encoder supply voltage*	✓	✓	✓	✓	✓
3.37	Drive encoder comms baud rate			✓	✓	✓
3.38	Drive encoder type	✓	✓	✓	✓	✓
3.41	Drive encoder auto configuration enable or SSI binary format select		✓	✓	✓	✓

✓ Information required
x Parameter can be set-up automatically by the drive through auto-configuration

* Pr **3.36**: If the output voltage from the encoder is >5V, then termination resistors must be disabled by setting Pr **3.39** to 0.

Table 7-3 shows a summary of the parameters required to set-up each feedback device. More detailed information follows.

7.5.2 Detailed feedback device commissioning/start-up information

Standard quadrature encoder with or without commutation signals (A, B, Z or A, B, Z, U, V, W), or Sincos encoder without serial communications		
Encoder type	Pr **3.38**	**Ab** (0) for a quadrature encoder without commutation signals * **Ab.SErVO** (3) for a quadrature encoder with commutation signals **SC** (6) for a Sincos encoder without serial communications *
Encoder power supply voltage	Pr **3.36**	**5V** (0), **8V** (1) or **15V** (2) **NOTE** If output voltage from the encoder is >5V, then the termination resistors must be disabled Pr **3.39** to 0
Encoder number of lines per revolution	Pr **3.34**	Set to the number of lines or sine waves per revolution of the encoder. See section 7.5.3 *Restriction of encoder number of lines per revolution* on page 135 for restrictions on this parameter.
Encoder termination selection (Ab or Ab.SErVO only)	Pr **3.39**	**0** = A, B, Z termination resistors disabled **1** = A, B termination resistors enabled and Z termination resistors disabled **2** = A, B, Z termination resistors enabled
Encoder error detection level	Pr **3.40**	**0** = Error detection disable **1** = Wire break detection on A, B and Z inputs enabled **2** = Phase error detection (Ab.SErVO only) **3** = Wire break detection on A, B and Z inputs and phase error detection (Ab.SErVO only) Termination resistors must be enabled for wire break detection to operate

* These settings should only be used in closed loop vector mode, otherwise a phase offset test must be performed after every power up.

Incremental encoder with frequency and direction (F and D), or Forward and Reverse (CW and CCW) signals, with or without commutation signals		
Encoder type	Pr **3.38**	**Fd** (1) for frequency and direction signals without commutation signals * **Fr** (2) for forward and reverse signals without commutation signals * **Fd.SErVO** (4) for a frequency and direction encoder with commutation signals **Fr.SErVO** (5) for forward and reverse signals with commutation signals
Encoder power supply voltage	Pr **3.36**	**5V** (0), **8V** (1) or **15V** (2) **NOTE** If output voltage from the encoder is >5V, then the termination resistors must be disabled Pr **3.39** to 0
Encoder number of lines per revolution	Pr **3.34**	Set to the number of pulses per revolution of the encoder divide by 2. See section 7.5.3 *Restriction of encoder number of lines per revolution* on page 135 for restrictions on this parameter.
Encoder termination selection	Pr **3.39**	**0** = F or CW, D or CCW, Z termination resistors disabled **1** = F or CW, D or CCW termination resistors enabled and Z termination resistors disabled **2** = For CW, D or CCW, Z termination resistors enabled
Encoder error detection level	Pr **3.40**	**0** = Error detection disable **1** = Wire break detection on F & D or CW & CCW, and Z inputs enabled **2** = Phase error detection (Fd.SErVO and Fr.SErVO only) **3** = Wire break detection on F & D or CW & CCW, and Z inputs and Phase error detection (Fd.SErVO and Fr.SErVO only) Termination resistors must be enabled for wire break detection to operate

* These settings should only be used in closed loop vector mode, otherwise a phase offset test must be performed after every power up.

Absolute Sincos encoder with Hiperface or EnDat serial communications, or Absolute EnDat communications only encoder		
The Unidrive SP is compatible with the following Hiperface encoders: SCS 60/70, SCM 60/70, SRS 50/60, SRM 50/60, SHS 170, LINCODER, SCS-KIT 101, SKS36, SKM36, SEK-53.		
Encoder type	Pr **3.38**	**SC.HiPEr** (7) for a Sincos encoder with Hiperface serial communications **EndAt** (8) for an EnDat communications only encoder **SC.EndAt** (9) for a Sincos encoder with EnDat serial communications
Encoder power supply voltage	Pr **3.36**	**5V** (0), **8V** (1) or **15V** (2)
Encoder auto configure enable	Pr **3.41**	Setting this to 1 automatically sets up the following parameters: Pr **3.33** Encoder turn bits Pr **3.34** Encoder number of lines of revolution (SC.HiPEr and SC.EndAt only) * Pr **3.35** Encoder single turn comms resolution Alternatively these parameters can be entered manually.
Encoder comms baud rate (EndAt and SC.EndAt only)	Pr **3.37**	**100** = 100k, **200** = 200k, **300** = 300k, **500** = 500k, **1000** = 1M, **1500** = 1.5M, or **2000** = 2M
Encoder error detection level (SC.HiPEr and SC.EndAt only)	Pr **3.40**	**0** = Error detection disabled **1** = Wire break detection on Sin and Cos inputs **2** = Phase error detection **3** = Wire break detection on Sin and Cos inputs and phase error detection

* See section 7.5.3 *Restriction of encoder number of lines per revolution* on page 135 for restrictions on this parameter.

Absolute SSI communications only encoder, or Absolute Sincos encoder with SSI		
Encoder type	Pr **3.38**	**SSI** (10) for a SSI communications only encoder **SC.SSI** (11) for a Sincos encoder with SSI
Encoder power supply voltage	Pr **3.36**	**5V** (0), **8V** (1) or **15V** (2)
Encoder number of lines per revolution. (SC.SSI only)	Pr **3.34**	Set to the number of sine waves per revolution of the encoder. See section 7.5.3 *Restriction of encoder number of lines per revolution* on page 135 for restrictions on this parameter.
SSI binary format select	Pr **3.41**	**OFF** (0) for gray code, or **On** (1) for binary format SSI encoders
Encoder turn bits	Pr **3.33**	Set to the number of turn bits for the encoder (this is usually 12bits for a SSI encoder)
Encoder single turn comms resolution	Pr **3.35**	Set to the single turn comms resolution for the encoder (this is usually 13bits for a SSI encoder)
Encoder comms baud rate	Pr **3.37**	**100** = 100k, **200** = 200k, **300** = 300k, **500** = 500k, **1000** = 1M, **1500** = 1.5M, or **2000** = 2M
Encoder error detection level	Pr **3.40**	**0** = Error detection disabled **1** = Wire break detection on Sin and Cos inputs (SC.SSI only) **2** = Phase error detection (SC.SSI only) **3** = Wire break detection and phase error detection (SC.SSI only) **4** = SSI power supply bit monitor **5** = SSI power supply bit monitor and wire break detection (SC.SSI only) **6** = SSI power supply bit monitor and phase error detection (SC.SSI only) **7** = SSI power supply bit monitor, wire break detection and phase error detection (SC.SSI only)

UVW commutation signal only encoders*		
Encoder type	Pr **3.38**	Ab.servo
Encoder power supply voltage	Pr **3.36**	**5V** (0), **8V** (1) or **15V** (2)
Encoder number of lines per revolution	Pr **3.34**	Set to zero
Encoder error detection level	Pr **3.40**	Set to zero to disable wire break detection

* This feedback device provides very low resolution feedback and should not be used for applications requiring a high level of performance.

Due to the low resolution of UVW communication only encoders, it is recommended that the speed feedback filter in Pr **3.42** is set to its maximum value. A value of 1ms to 2ms may also be required in the current demand filter (Pr **4.12**) and it is also recommended that the speed loop gains are set to a low value to obtain stable operation.

7.5.3 Restriction of encoder number of lines per revolution

Although Pr **3.34** can be set to any value from 0 to 50,000 there are restrictions on the values actually used by the drive. These restrictions are dependent on the software version as follows:

Software version V01.06.01 and later

Table 7-4 Restrictions of drive encoder lines per revolution with software version V01.06.01 and later

Position feedback device	Equivalent Lines per revolution used by the drive
Ab, Fd, Fr, Ab.SErVO, Fd.SErVO, Fr.SerVO, SC	The drive uses the value in Pr **3.34**.
SC.HiPEr, SC.EndAt, SC.SSI (rotary encoders)	If Pr **3.34** ≤1, the drive uses the value of 1. If 1< Pr **3.34** <32,768, the drive uses the value in Pr **3.34** rounded down to nearest value that is a power of 2. If Pr **3.34** ≥32,768, the drive uses the value of 32,768.
SC.HiPEr, SC.EndAt, SC.SSI (linear encoders	The drive uses the value in Pr **3.34**.

Software version V01.06.00 and earlier

Table 7-5 Restrictions of drive encoder lines per revolution with software version V01.06.00 and earlier

Position feedback device	Equivalent Lines per revolution used by the drive
Ab, Fd, Fr	If Pr **3.34** <2, the drive uses the value of 2. If 2≤ Pr **3.34** .≤16,384, the drive uses the value in Pr **3.34.** If Pr **3.34** >16,384, the drive uses the value in Pr **3.34** rounded down to nearest value divisible by 4.
Ab.SErVO, Fd.SErVO, Fr.SErVO	If Pr **3.34** ≤2, the drive uses the value of 2. If 2< Pr **3.34** <16,384, the drive uses the value in Pr **3.34** rounded down to nearest value that is a power of 2. If Pr **3.34** ≥16,384, the drive uses the value of 16,384.
SC, SC.HiPEr, SC.EndAt, SC.SSI	If Pr **3.34** ≤2, the drive uses the value of 2. If 2< Pr **3.34** <32,768, the drive uses the value in Pr **3.34** rounded down to nearest value that is a power of 2. If Pr **3.34** ≥32,768, the drive uses the value of 32,768.

At power-up Pr **3.48** is initially zero, but is set to one when the drive encoder and any encoders connected to any Solutions Modules have been initialized. The drive cannot be enabled until this parameter is one.

Encoder initialization will occur as follows:

- At drive power-up
- When requested by the user via Pr **3.47**
- When trips PS.24V, Enc1 to Enc8, or Enc11 to Enc17 trips are reset
- The encoder number of lines per revolution (Pr **3.34**) or the number of motor poles (Pr **5.11** and Pr **21.11**) are changed (software version V01.08.00 and later).

Initialization causes an encoder with communications to be re-initialized and auto-configuration to be performed if selected. After initialization Ab.SErVO, Fd.SErVO and Fr.SErVO encoders will use the UVW commutations signals to give position feedback for the first 120° (electrical) of rotation when the motor is restarted.

8 Optimization

This chapter takes the user through methods of optimizing the product set-up, maximizing performance. The auto-tuning features of the drive simplify this task.

8.1 Motor map parameters

8.1.1 Open loop motor control

Pr 0.46 {5.07} Motor rated current	**Defines the maximum continuous motor current**

The motor rated current parameter must be set to the maximum continuous current of the motor. (See section 8.2 *Maximum motor rated current* on page 147, for information about setting this parameter higher then the maximum Heavy Duty current rating.) The motor rated current is used in the following:

- Current limits (see section 8.3 *Current limits* on page 147, for more information)
- Motor thermal overload protection (see section 8.4 *Motor thermal protection* on page 147, for more information)
- Vector mode voltage control (see Voltage mode Pr **0.07**, later in this table)
- Slip compensation (see Slip compensation Pr **5.27**, later in this table)
- Dynamic V/F control

Pr 0.44 {5.09} Motor rated voltage	**Defines the voltage applied to the motor at rated frequency**
Pr 0.47 {5.06} Motor rated frequency	**Defines the frequency at which rated voltage is applied**

The motor rated voltage Pr **0.44** and the motor rated frequency Pr **0.47** are used to define the voltage to frequency characteristic applied to the motor (see voltage mode Pr **0.07**, later in this table). The motor rated frequency is also used in conjunction with the motor rated speed to calculate the rated slip for slip compensation (see motor rated speed Pr **0.45**, later in this table).

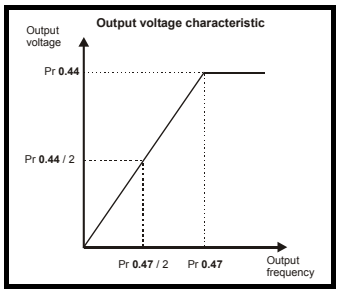

Pr 0.45 {5.08} Motor rated speed	**Defines the full load rated speed of the motor**
Pr 0.42 {5.11} Motor number of poles	**Defines the number of motor poles**

The motor rated speed and the number of poles are used with the motor rated frequency to calculate the rated slip of induction machines in Hz.

Rated slip (Hz) = Motor rated frequency - (Number of pole pairs x [Motor rated speed / 60]) = $\mathbf{0.47} - \left(\frac{\mathbf{0.42}}{\mathbf{2}} \times \frac{\mathbf{0.45}}{\mathbf{60}}\right)$

If Pr **0.45** is set to 0 or to synchronous speed, slip compensation is disabled. If slip compensation is required this parameter should be set to the nameplate value, which should give the correct rpm for a hot machine. Sometimes it will be necessary to adjust this when the drive is commissioned because the nameplate value may be inaccurate. Slip compensation will operate correctly both below base speed and within the field-weakening region. Slip compensation is normally used to correct for the motor speed to prevent speed variation with load. The rated load rpm can be set higher than synchronous speed to deliberately introduce speed droop. This can be useful to aid load sharing with mechanically coupled motors.

Pr **0.42** is also used in the calculation of the motor speed display by the drive for a given output frequency. When Pr **0.42** is set to 'Auto', the number of motor poles is automatically calculated from the rated frequency Pr **0.47**, and the motor rated speed Pr **0.45**.

Number of poles = 120 x (Motor rated frequency Pr **0.47** / Motor rated speed Pr **0.45**) rounded to the nearest even number

Pr 0.43 {5.10} Motor rated power factor	**Defines the angle between the motor voltage and current**

The power factor is the true power factor of the motor, i.e. the angle between the motor voltage and current. The power factor is used in conjunction with the motor rated current Pr **0.46**, to calculate the rated active current and magnetising current of the motor. The rated active current is used extensively to control the drive, and the magnetising current is used in vector mode stator resistance compensation. It is important that this parameter is set up correctly. The drive can measure the motor rated power factor by performing a rotating autotune (see Autotune Pr **0.40**, below).

Pr 0.40 {5.12} Autotune	

There are two autotune tests available in open loop mode, a stationary and a rotating test. A rotating autotune should be used whenever possible so the measured value of power factor of the motor is used by the drive.

- A stationary autotune can be used when the motor is loaded and it is not possible to remove the load from the motor shaft. The stationary test measures the stator resistance (Pr **5.17**) and voltage offset (Pr **5.23**), which are required for good performance in vector control modes (see Voltage mode Pr **0.07**, later in this table). The stationary autotune does not measure the power factor of the motor so the value on the motor nameplate must be entered into Pr **0.43**. To perform a Stationary autotune, set Pr **0.40** to 1, and provide the drive with both an enable signal (on terminal 31) and a run signal (on terminal 26 or 27).
- A rotating autotune should only be used if the motor is unloaded. A rotating autotune first performs a stationary autotune, as above, before rotating the motor at $^{2}/_{3}$ base speed in the direction selected for several seconds (regardless of the speed reference). In addition to the stator resistance (Pr **5.17**) and voltage offset (Pr **5.23**), the rotating autotune measures the power factor of the motor and updates Pr **0.43** with the correct value. To perform a Rotating autotune, set Pr **0.40** to 2, and provide the drive with both an enable signal (on terminal 31) and a run signal (on terminal 26 or 27).

Following the completion of an autotune test the drive will go into the inhibit state. The drive must be placed into a controlled disable condition before the drive can be made to run at the required reference. The drive can be put in to a controlled disable condition by removing the SAFE TORQUE OFF signal from terminal 31, setting the drive enable parameter Pr **6.15** to OFF (0) or disabling the drive via the control word (Pr **6.42** & Pr **6.43**).

Pr 0.07 {5.14} Voltage mode

There are six voltage modes available which fall into two categories, vector control and fixed boost.

Vector control

Vector control mode provides the motor with a linear voltage characteristic from 0Hz to motor rated frequency (Pr **0.47**), and then a constant voltage above motor rated frequency. When the drive operates between motor rated frequency/50 and motor rated frequency/4, full vector based stator resistance compensation is applied. When the drive operates between motor rated frequency/4 and motor rated frequency/2 the stator resistance compensation is gradually reduced to zero as the frequency increases. For the vector modes to operate correctly the motor rated power factor (Pr **0.43**), stator resistance (Pr **5.17**) and voltage offset (Pr **5.23**) are all required to be set up accurately. The drive can be made to measure these by performing an autotune (see Pr **0.40** Autotune). The drive can also be made to measure the stator resistance and voltage offset automatically every time the drive is enabled or the first time the drive is enabled after it is powered up, by selecting one of the vector control voltage modes.

(0) **Ur_S =** The stator resistance and the voltage offset are measured and the parameters for the selected motor map are over-written each time the drive is made to run. This test can only be done with a stationary motor where the flux has decayed to zero. Therefore this mode should only be used if the motor is guaranteed to be stationary each time the drive is made to run. To prevent the test from being done before the flux has decayed there is a period of 1 second after the drive has been in the ready state during which the test is not done if the drive is made to run again. In this case, previously measured values are used. Ur_s mode ensures that the drive compensates for any change in motor parameters due to changes in temperature. The new values of stator resistance and voltage offset are not automatically saved to the drive's EEPROM.

(4) **Ur_I =** The stator resistance and voltage offset are measured when the drive is first made to run after each power-up. This test can only be done with a stationary motor. Therefore this mode should only be used if the motor is guaranteed to be stationary the first time the drive is made to run after each power-up. The new values of stator resistance and voltage offset are not automatically saved to the drive's EEPROM.

(1) **Ur =** The stator resistance and voltage offset are not measured. The user can enter the motor and cabling resistance into the stator resistance parameter (Pr **5.17**). However this will not include resistance effects within the drive inverter. Therefore if this mode is to be used, it is best to use an autotune test initially to measure the stator resistance and voltage offset.

(3) **Ur_Auto=** The stator resistance and voltage offset are measured once, the first time the drive is made to run. After the test has been completed successfully the voltage mode (Pr **0.07**) is changed to Ur mode. The stator resistance (Pr **5.17**) and voltage offset (Pr **5.23**) parameters are written to, and along with the voltage mode (Pr **0.07**), are saved in the drive's EEPROM. If the test fails, the voltage mode will stay set to Ur_Auto and the test will be repeated next time the drive is made to run.

Fixed boost

Neither the stator resistance nor the voltage offset are used in the control of the motor, instead a fixed characteristic with low frequency voltage boost as defined by parameter Pr **0.08**, is used. Fixed boost mode should be used when the drive is controlling multiple motors. There are two settings of fixed boost available:

(2) **Fd =** This mode provides the motor with a linear voltage characteristic from 0Hz to rated frequency (Pr **0.47**), and then a constant voltage above rated frequency.

(5) **SrE =** This mode provides the motor with a square law voltage characteristic from 0Hz to rated frequency (Pr **0.47**), and then a constant voltage above rated frequency. This mode is suitable for variable torque applications like fans and pumps where the load is proportional to the square of the speed of the motor shaft. This mode should not be used if a high starting torque is required.

For both these modes, at low frequencies (from 0Hz to ½ x Pr **0.47**) a voltage boost is applied defined by Pr **0.08** as shown below:

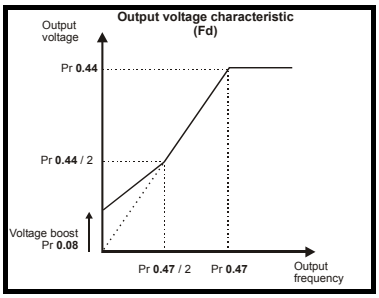

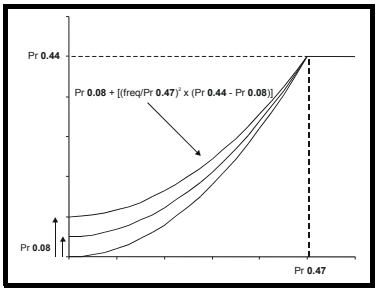

Pr 5.27 Slip compensation

When a motor, being controlled in open loop mode, has load applied a characteristic of the motor is that the output speed droops in proportion to the load applied as shown:

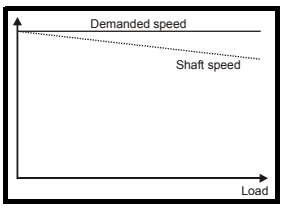

In order to prevent the speed droop shown above slip compensation should be enabled.

To enable slip compensation Pr **5.27** must be set to a 1 (this is the default setting), and the motor rated speed must be entered in Pr **0.45** (Pr **5.08**). The motor rated speed parameter should be set to the synchronous speed of the motor minus the slip speed. This is normally displayed on the motor nameplate, i.e. for a typical 18.5kW, 50Hz, 4 pole motor, the motor rated speed would be approximately 1465rpm. The synchronous speed for a 50Hz, 4 pole motor is 1500rpm, so therefore the slip speed would be 35rpm.

If the synchronous speed is entered in Pr **0.45**, slip compensation will be disabled. If too small a value is entered in Pr **0.45**, the motor will run faster than the demanded frequency.

The synchronous speeds for 50Hz motors with different numbers of poles are as follows:

2 pole = 3000rpm, 4 pole = 1500rpm, 6pole =1000rpm, 8 pole = 750rpm

8.1.2 RFC mode

Software V01.10.00 or later should be used for RFC mode.

Pr 0.46 {5.07} Motor rated current	**Defines the maximum motor continuous current**

The motor rated current parameter must be set to the maximum continuous current of the motor. (See section 8.2 *Maximum motor rated current* on page 147, for information about setting this parameter higher than the maximum Heavy Duty current rating.) The motor rated current is used in the following:

- Current limits (see section 8.3 *Current limits* on page 147, for more information)
- Motor thermal overload protection (see section 8.4 *Motor thermal protection* on page 147, for more information)
- Vector control algorithm

Pr 0.44 {5.09} Motor rated voltage	**Defines the voltage applied to the motor at rated frequency**
Pr 0.47 {5.06} Motor rated frequency	**Defines the frequency at which rated voltage is applied**

The motor rated voltage Pr **0.44** and the motor rated frequency Pr **0.47** are used to define the relationship between the voltage and frequency applied to the motor, as shown.

The motor rated voltage is used by the field controller to limit the voltage applied to the motor. Normally this is set to the nameplate value. To allow current control to be maintained, it is necessary for the drive to leave some 'headroom' between the motor terminal voltage and the maximum available drive output voltage. For good transient performance at high speed, the motor rated voltage should be set below 95% of the minimum supply voltage to the drive.

The motor rated voltage and motor rated frequency are also used during the rotating autotune test (see Autotune Pr **0.40** later in this table) and in the calculations required for automatic optimization of the motor rated speed (see Motor rated speed optimization Pr **5.16**, later in this table). Therefore, it is important that the correct value for motor rated voltage is used.

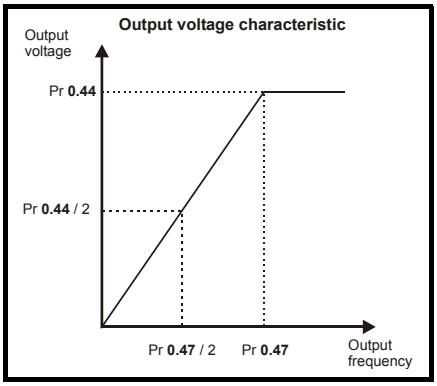

Pr 0.45 {5.08} Motor rated speed	**Defines the full load rated speed of the motor**
Pr 0.42 {5.11} Motor number of poles	**Defines the number of motor poles**

The motor rated speed and motor rated frequency are used to determine the full load slip of the motor which is used by the vector control algorithm. Incorrect setting of this parameter has the following effects:

- Reduced efficiency of motor operation
- Reduction of maximum torque available from the motor
- Reduced transient performance
- Inaccurate control of absolute torque in torque control modes

The nameplate value is normally the value for a hot motor; however, some adjustment may be required when the drive is commissioned if the nameplate value is inaccurate. Either a fixed value can be entered in this parameter or an optimization system may be used to automatically adjust this parameter (see Motor rated speed autotune Pr **5.16**, later in this table).

When Pr **0.42** is set to ‘Auto’, the number of motor poles is automatically calculated from the motor rated frequency Pr **0.47**, and the motor rated speed Pr **0.45**

Number of poles = 120 x (Motor rated frequency Pr **0.47** / Motor rated speed Pr **0.45**) rounded to the nearest even number

Pr 0.43 {5.10} Motor rated power factor	**Defines the angle between the motor voltage and current**

The power factor is the true power factor of the motor, i.e. the angle between the motor voltage and current. If the stator inductance is set to zero (Pr **5.25**) then the power factor is used in conjunction with the motor rated current Pr **0.46** and other motor parameters to calculate the rated active and magnetising currents of the motor, which are used in the vector control algorithm. If the stator inductance has a non-zero value this parameter is not used by the drive, but is continuously written with a calculated value of power factor. The stator inductance can be measured by the drive by performing a rotating autotune (see Autotune Pr **0.40**, later in this table).

Pr 0.40 {5.12} Autotune

There are three autotune tests available in RFC mode, a stationary test, a rotating test and an inertia measurement test. A stationary autotune will give moderate performance whereas a rotating autotune will give improved performance as it measures the actual values of the motor parameters required by the drive. An inertia measurement test should be performed separately to a stationary or rotating autotune.

NOTE

It is highly recommended that a rotating autotune is performed (Pr **0.40** set to 2).

- A stationary autotune can be used when the motor is loaded and it is not possible to remove the load from the motor shaft. The stationary autotune measures the stator resistance (Pr **5.17**) and transient inductance (Pr **5.24**) of the motor. These are used to calculate the current loop gains, and at the end of the test the values in Pr **4.13** and Pr **4.14** are updated. A stationary autotune does not measure the power factor of the motor so the value on the motor nameplate must be entered into Pr **0.43**. To perform a Stationary autotune, set Pr **0.40** to 1, and provide the drive with both an enable signal (on terminal 31) and a run signal (on terminal 26 or 27).
- A rotating autotune should only be used if the motor is unloaded. A rotating autotune first performs a stationary autotune before rotating the motor at $^{2}/_{3}$ of motor rated frequency in the direction selected for approximately 30s. During the rotating autotune the stator inductance (Pr **5.25**), and the motor saturation breakpoints (Pr **5.29** and Pr **5.30**) are modified by the drive. The power factor is also modified for user information only, but is not used after this point as the stator inductance is used in the vector control algorithm instead. To perform a Rotating autotune, set Pr **0.40** to 2, and provide the drive with both an enable signal (on terminal 31) and a run signal (on terminal 26 or 27).
- The inertia measurement test can measure the total inertia of the load and the motor. This is used to set the speed loop gains (see *Speed loop gains*) and to provide torque feed-forwards when required during acceleration.
  During the inertia measurement test the drive attempts to accelerate the motor in the direction selected up to $^{3}/_{4}$ x rated load rpm and then back to standstill. The drive uses rated torque/16, but if the motor cannot be accelerated to the required speed the drive then increases the torque progressively to x$^{1}/_{8}$, x$^{1}/_{4}$, x$^{1}/_{2}$ and x1 rated torque. If the required speed is not achieved on the final attempt the test is aborted and a tunE1 trip is initiated. If the test is successful the acceleration and deceleration times are used to calculate the motor and load inertia which is then written to Pr **3.18**. The motor map parameters must be set up correctly including the power factor before performing an inertia measurement test.
  To perform an Inertia measurement autotune, set Pr **0.40** to 3, and provide the drive with both an enable signal (on terminal 31) and a run signal (on terminal 26 or 27).

Following the completion of an autotune test the drive will go into the inhibit state. The drive must be placed into a controlled disable condition before the drive can be made to run at the required reference. The drive can be put in to a controlled disable condition by removing the SAFE TORQUE OFF signal from terminal 31, setting the drive enable parameter Pr **6.15** to OFF (0) or disabling the drive via the control word (Pr **6.42** & Pr **6.43**).

Pr 0.38 {4.13} / Pr 0.39 {4.14} Current loop gains

The current loop gains proportional (Kp) and integral (Ki) gains control the response of the current loop to a change in current (torque) demand. The default values give satisfactory operation with most motors. However, for optimal performance in dynamic applications it may be necessary to change the gains to improve the performance. The proportional gain (Pr **4.13**) is the most critical value in controlling the performance. The values for the current loop gains can be calculated by one of the following:

- During a stationary or rotating autotune (see *Autotune Pr **0.40***, earlier in this table) the drive measures the stator resistance (Pr **5.17**) and transient inductance (Pr **5.24**) of the motor and calculates the current loop gains.
- By setting Pr **0.40** to 4 the drive will calculate the current loop gains from the values of stator resistance (Pr **5.17**) and transient inductance (Pr **5.24**) set in the drive.

This will give a step response with minimum overshoot after a step change of current reference. The proportional gain can be increased by a factor of 1.5 giving a similar increase in bandwidth; however, this gives a step response with approximately 12.5% overshoot. The equation for the integral gain gives a conservative value. In some applications where it is necessary for the reference frame used by the drive to dynamically follow the flux very closely (i.e. high speed RFC induction motor applications) the integral gain may need to have a significantly higher value.

Pr 3.42 Drive encoder filter

In RFC mode Pr **3.42** defines a filter on the output of the speed estimator which is used as the speed feedback. A filter with a 4ms time constant is always present on the output of the speed estimator, but this filter may be extended as follows:

0 = 4ms, 1 = 8ms, 2 = 16ms, 3 = 32ms, 4 = 64ms, 5 = 128ms.

The output of the speed estimator can include some ripple, which increases as the drive passes into field weakening and the filter can be used to remove this ripple. This is particularly useful when using standard ramp or spinning start with a low friction, high inertia load, and can prevent over voltage trips when the drive has no braking resistor.

Pr 5.40 Spin start boost

If Pr **6.09** is set to enable the catch a spinning motor function in open-loop mode or RFC modes, this parameter defines a scaling function used by the algorithm that detects the speed of the motor. It is likely that for smaller motors (~4kW) the default value of 1.0 is suitable, but for larger motors this parameter may need to be increased. If the value of this parameter is too large the motor may accelerate from standstill when the drive is enabled. If the value of this parameter is too small the drive will detect the motor speed as zero even if the motor is spinning.

Speed loop gains (Pr 0.07 {3.10}, Pr 0.08 {3.11}, Pr 0.09 {3.12})

The speed loop gains control the response of the speed controller to a change in speed demand. The speed controller includes proportional (Kp) and integral (Ki) feed forward terms, and a differential (Kd) feedback term. The drive holds two sets of these gains and either set may be selected for use by the speed controller with Pr **3.16**. If Pr **3.16** = 0, gains Kp1, Ki1 and Kd1 (Pr **0.07** to Pr **0.09**) are used, and if Pr **3.16** = 1, gains Kp2, Ki2 and Kd2 (Pr **3.13** to Pr **3.15**) are used. Pr **3.16** may be changed when the drive is enabled or disabled. If the load is predominantly a constant inertia and constant torque, the drive can calculate the required Kp and Ki gains to give a required compliance angle or bandwidth dependant on the setting of Pr **3.17**.

*Proportional gain (Kp), Pr **0.07 {3.10}** and Pr **3.13***

If the proportional gain has a value and the integral gain is set to zero the controller will only have a proportional term, and there must be a speed error to produce a torque reference. Therefore as the motor load increases there will be a difference between the reference and actual speeds. This effect, called regulation, depends on the level of the proportional gain, the higher the gain the smaller the speed error for a given load. If the proportional gain is too high either the acoustic noise produced by speed feedback quantization becomes unacceptable, or the stability limit is reached.

*Integral gain (Ki), Pr **0.08 {3.11}** and Pr **3.14***

The integral gain is provided to prevent speed regulation. The error is accumulated over a period of time and used to produce the necessary torque demand without any speed error. Increasing the integral gain reduces the time taken for the speed to reach the correct level and increases the stiffness of the system, i.e. it reduces the positional displacement produced by applying a load torque to the motor. Unfortunately increasing the integral gain also reduces the system damping giving overshoot after a transient. For a given integral gain the damping can be improved by increasing the proportional gain. A compromise must be reached where the system response, stiffness and damping are all adequate for the application. For RFC mode, it is unlikely that the integral gain can be increased much above 0.50.

*Differential gain (Kd), Pr **0.09 {3.12}** and Pr **3.15***

The differential gain is provided in the feedback of the speed controller to give additional damping. The differential term is implemented in a way that does not introduce excessive noise normally associated with this type of function. Increasing the differential term reduces the overshoot produced by under-damping, however, for most applications the proportional and integral gains alone are sufficient.

There are three methods of tuning the speed loop gains dependant on the setting of Pr **3.17**:

1. Pr **3.17** = 0, User set-up.
   This involves the connecting of an oscilloscope to analog output 1 to monitor the speed feedback.
   Give the drive a step change in speed reference and monitor the response of the drive on the oscilloscope.
   The proportional gain (Kp) should be set up initially. The value should be increased up to the point where the speed overshoots and then reduced slightly.
   The integral gain (Ki) should then be increased up to the point where the speed becomes unstable and then reduced slightly.
   It may now be possible to increase the proportional gain to a higher value and the process should be repeated until the system response matches the ideal response as shown.
   The diagram shows the effect of incorrect P and I gain settings as well as the ideal response.
2. Pr **3.17** = 1, Bandwidth set-up
   If bandwidth based set-up is required, the drive can calculate Kp and Ki if the following parameters are set up correctly:
   - Pr **3.20** - Required bandwidth,
   - Pr **3.21** - Required damping factor,
   - Pr **3.18** - Motor and load inertia. The drive can be made to measure the motor and load inertia by performing an inertia measurement autotune (see Autotune Pr **0.40**, earlier in this table).
3. Pr **3.17** = 2, Compliance angle set-up
   If compliance angle based set-up is required, the drive can calculate Kp and Ki if the following parameters are set up correctly:
   - Pr **3.19** - Required compliance angle,
   - Pr **3.21** - Required damping factor,
   - Pr **3.18** - Motor and load inertia The drive can be made to measure the motor and load inertia by performing an inertia measurement autotune (see Autotune Pr **0.40**, earlier in this table).

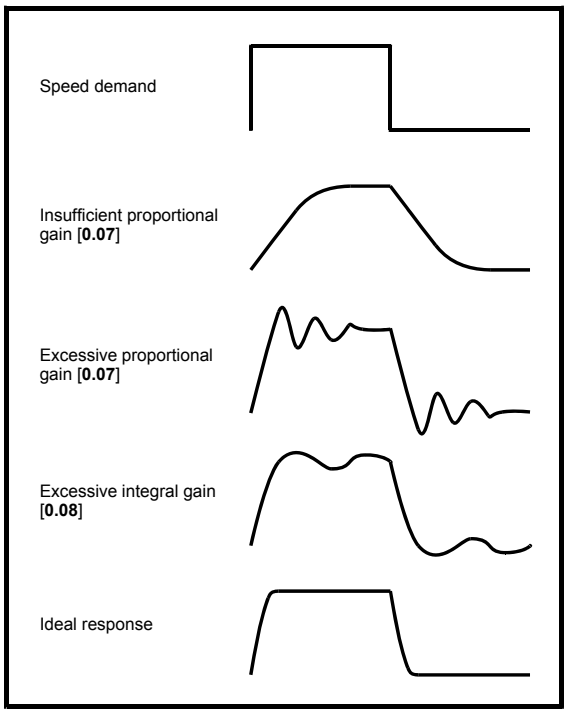

8.1.3 Closed loop vector motor control

Pr 0.46 {5.07} Motor rated current	**Defines the maximum motor continuous current**

The motor rated current parameter must be set to the maximum continuous current of the motor. (See section 8.2 *Maximum motor rated current* on page 147, for information about setting this parameter higher than the maximum Heavy Duty current rating.) The motor rated current is used in the following:

- Current limits (see section 8.3 *Current limits* on page 147, for more information)
- Motor thermal overload protection (see section 8.4 *Motor thermal protection* on page 147, for more information)
- Vector control algorithm

Pr 0.44 {5.09} Motor rated voltage	**Defines the voltage applied to the motor at rated frequency**
Pr 0.47 {5.06} Motor rated frequency	**Defines the frequency at which rated voltage is applied**

The motor rated voltage Pr **0.44** and the motor rated frequency Pr **0.47** are used to define the relationship between the voltage and frequency applied to the motor, as shown.

The motor rated voltage is used by the field controller to limit the voltage applied to the motor. Normally this is set to the nameplate value. To allow current control to be maintained, it is necessary for the drive to leave some 'headroom' between the motor terminal voltage and the maximum available drive output voltage. For good transient performance at high speed, the motor rated voltage should be set below 95% of the minimum supply voltage to the drive.

The motor rated voltage and motor rated frequency are also used during the rotating autotune test (see Autotune Pr **0.40** later in this table) and in the calculations required for automatic optimization of the motor rated speed (see Motor rated speed optimization Pr **5.16**, later in this table). Therefore, it is important that the correct value for motor rated voltage is used.

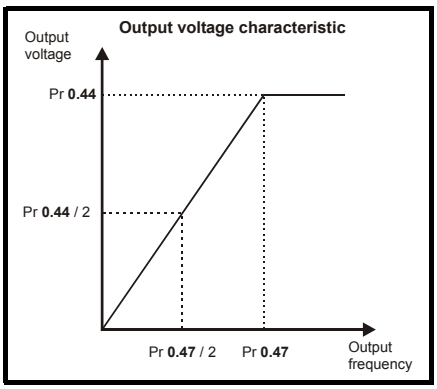

Pr 0.45 {5.08} Motor rated speed	**Defines the full load rated speed of the motor**
Pr 0.42 {5.11} Motor number of poles	**Defines the number of motor poles**

The motor rated speed and motor rated frequency are used to determine the full load slip of the motor which is used by the vector control algorithm. Incorrect setting of this parameter has the following effects:

- Reduced efficiency of motor operation
- Reduction of maximum torque available from the motor
- Reduced transient performance
- Inaccurate control of absolute torque in torque control modes

The nameplate value is normally the value for a hot motor; however, some adjustment may be required when the drive is commissioned if the nameplate value is inaccurate. Either a fixed value can be entered in this parameter or an optimization system may be used to automatically adjust this parameter (see Motor rated speed autotune Pr **5.16**, later in this table).

When Pr **0.42** is set to 'Auto', the number of motor poles is automatically calculated from the motor rated frequency Pr **0.47**, and the motor rated speed Pr **0.45**

Number of poles = 120 x (Motor rated frequency Pr **0.47** / Motor rated speed Pr **0.45**) rounded to the nearest even number

Pr 0.43 {5.10} Motor rated power factor	**Defines the angle between the motor voltage and current**

The power factor is the true power factor of the motor, i.e. the angle between the motor voltage and current. If the stator inductance is set to zero (Pr **5.25**) then the power factor is used in conjunction with the motor rated current Pr **0.46** and other motor parameters to calculate the rated active and magnetising currents of the motor, which are used in the vector control algorithm. If the stator inductance has a non-zero value this parameter is not used by the drive, but is continuously written with a calculated value of power factor. The stator inductance can be measured by the drive by performing a rotating autotune (see Autotune Pr **0.40**, later in this table).

Pr 0.40 {5.12} Autotune

There are three autotune tests available in closed loop vector mode, a stationary test, a rotating test and an inertia measurement test. A stationary autotune will give moderate performance whereas a rotating autotune will give improved performance as it measures the actual values of the motor parameters required by the drive. An inertia measurement test should be performed separately to a stationary or rotating autotune.

- A stationary autotune can be used when the motor is loaded and it is not possible to remove the load from the motor shaft. The stationary autotune measures the stator resistance (Pr **5.17**) and transient inductance (Pr **5.24**) of the motor. These are used to calculate the current loop gains, and at the end of the test the values in Pr **4.13** and Pr **4.14** are updated. A stationary autotune does not measure the power factor of the motor so the value on the motor nameplate must be entered into Pr **0.43**. To perform a Stationary autotune, set Pr **0.40** to 1, and provide the drive with both an enable signal (on terminal 31) and a run signal (on terminal 26 or 27).
- A rotating autotune should only be used if the motor is unloaded. A rotating autotune first performs a stationary autotune before rotating the motor at $^{2}/_{3}$ of motor rated frequency in the direction selected for approximately 30s. During the rotating autotune the stator inductance (Pr **5.25**), and the motor saturation breakpoints (Pr **5.29** and Pr **5.30**) are modified by the drive. The power factor is also modified for user information only, but is not used after this point as the stator inductance is used in the vector control algorithm instead. To perform a Rotating autotune, set Pr **0.40** to 2, and provide the drive with both an enable signal (on terminal 31) and a run signal (on terminal 26 or 27).
- The inertia measurement test can measure the total inertia of the load and the motor. This is used to set the speed loop gains (see *Speed loop gains*) and to provide torque feed-forwards when required during acceleration.
  During the inertia measurement test the drive attempts to accelerate the motor in the direction selected up to $^{3}/_{4}$ x rated load rpm and then back to standstill. The drive uses rated torque/16, but if the motor cannot be accelerated to the required speed the drive then increases the torque progressively to $x^{1}/_{8}$, $x^{1}/_{4}$, $x^{1}/_{2}$ and x1 rated torque. If the required speed is not achieved on the final attempt the test is aborted and a tunE1 trip is initiated. If the test is successful the acceleration and deceleration times are used to calculate the motor and load inertia which is then written to Pr **3.18**. The motor map parameters must be set up correctly including the power factor before performing an inertia measurement test.
  To perform an Inertia measurement autotune, set Pr **0.40** to 3, and provide the drive with both an enable signal (on terminal 31) and a run signal (on terminal 26 or 27).

Following the completion of an autotune test the drive will go into the inhibit state. The drive must be placed into a controlled disable condition before the drive can be made to run at the required reference. The drive can be put in to a controlled disable condition by removing the SAFE TORQUE OFF signal from terminal 31, setting the drive enable parameter Pr **6.15** to OFF (0) or disabling the drive via the control word (Pr **6.42** & Pr **6.43**).

Pr 5.16 Motor rated speed autotune

The motor rated speed parameter (Pr **0.45**) in conjunction with the motor rated frequency parameter (Pr **0.47**) defines the full load slip of the motor. The slip is used in the motor model for closed-loop vector control. The full load slip of the motor varies with rotor resistance which can vary significantly with motor temperature. When Pr **5.16** is set to 1 or 2 the drive can automatically sense if the value of slip defined by Pr **0.47** and Pr **0.45** has been set incorrectly or if it has varied with motor temperature. If the value is incorrect Pr **0.45** is automatically adjusted. Pr **0.45** is not saved at power-down, and so when the drive is powered-down and up again it will return to the last saved value. If the new value is required at the next power-up it must be saved by the user. Automatic optimization is only enabled when the speed is above rated speed/8, and when the load on the motor load rises above $^{5}/_{8}$ rated load. Optimization is disabled again if the load falls below $^{1}/_{2}$ rated load. For best optimization results the correct values of stator resistance (Pr **5.17**), transient inductance (Pr **5.24**), stator inductance (Pr **5.25**) and saturation breakpoints (Pr **5.29**, Pr **5.30**) should be stored in the relevant parameters (all these can be measured by the drive by performing a rotating autotune). Motor rated speed autotune is not available if the drive is not using external position/speed feedback.
The gain of the optimizer, and hence the speed with which it converges, can be set at a normal low level when Pr **5.16** is set to 1. If this parameter is set to 2, the gain is increased by a factor of 16 to give faster convergence.

Pr 0.38 {4.13} / Pr 0.39 {4.14} Current loop gains

The current loop gains proportional (Kp) and integral (Ki) gains control the response of the current loop to a change in current (torque) demand. The default values give satisfactory operation with most motors. However, for optimal performance in dynamic applications it may be necessary to change the gains to improve the performance. The proportional gain (Pr **4.13**) is the most critical value in controlling the performance. The values for the current loop gains can be calculated by one of the following:

- During a stationary or rotating autotune (see *Autotune Pr **0.40***, earlier in this table) the drive measures the stator resistance (Pr **5.17**) and transient inductance (Pr **5.24**) of the motor and calculates the current loop gains.
- By setting Pr **0.40** to 4 the drive will calculate the current loop gains from the values of stator resistance (Pr **5.17**) and transient inductance (Pr **5.24**) set in the drive.

This will give a step response with minimum overshoot after a step change of current reference. The proportional gain can be increased by a factor of 1.5 giving a similar increase in bandwidth; however, this gives a step response with approximately 12.5% overshoot. The equation for the integral gain gives a conservative value. In some applications where it is necessary for the reference frame used by the drive to dynamically follow the flux very closely (i.e. high speed closed-loop induction motor applications) the integral gain may need to have a significantly higher value.

Speed loop gains (Pr 0.07 {3.10}, Pr 0.08 {3.11}, Pr 0.09 {3.12})

The speed loop gains control the response of the speed controller to a change in speed demand. The speed controller includes proportional (Kp) and integral (Ki) feed forward terms, and a differential (Kd) feedback term. The drive holds two sets of these gains and either set may be selected for use by the speed controller with Pr **3.16**. If Pr **3.16** = 0, gains Kp1, Ki1 and Kd1 (Pr **0.07** to Pr **0.09**) are used, and if Pr **3.16** = 1, gains Kp2, Ki2 and Kd2 (Pr **3.13** to Pr **3.15**) are used. Pr **3.16** may be changed when the drive is enabled or disabled. If the load is predominantly a constant inertia and constant torque, the drive can calculate the required Kp and Ki gains to give a required compliance angle or bandwidth dependant on the setting of Pr **3.17**.

*Proportional gain (Kp), Pr **0.07 {3.10}** and Pr **3.13***

If the proportional gain has a value and the integral gain is set to zero the controller will only have a proportional term, and there must be a speed error to produce a torque reference. Therefore as the motor load increases there will be a difference between the reference and actual speeds. This effect, called regulation, depends on the level of the proportional gain, the higher the gain the smaller the speed error for a given load. If the proportional gain is too high either the acoustic noise produced by speed feedback quantization becomes unacceptable, or the closed-loop stability limit is reached.

*Integral gain (Ki), Pr **0.08 {3.11}** and Pr **3.14***

The integral gain is provided to prevent speed regulation. The error is accumulated over a period of time and used to produce the necessary torque demand without any speed error. Increasing the integral gain reduces the time taken for the speed to reach the correct level and increases the stiffness of the system, i.e. it reduces the positional displacement produced by applying a load torque to the motor. Unfortunately increasing the integral gain also reduces the system damping giving overshoot after a transient. For a given integral gain the damping can be improved by increasing the proportional gain. A compromise must be reached where the system response, stiffness and damping are all adequate for the application.

*Differential gain (Kd), Pr **0.09 {3.12}** and Pr **3.15***

The differential gain is provided in the feedback of the speed controller to give additional damping. The differential term is implemented in a way that does not introduce excessive noise normally associated with this type of function. Increasing the differential term reduces the overshoot produced by under-damping, however, for most applications the proportional and integral gains alone are sufficient.

There are three methods of tuning the speed loop gains dependant on the setting of Pr **3.17**:

1. Pr **3.17** = 0, User set-up.
   This involves the connecting of an oscilloscope to analog output 1 to monitor the speed feedback.
   Give the drive a step change in speed reference and monitor the response of the drive on the oscilloscope.
   The proportional gain (Kp) should be set up initially. The value should be increased up to the point where the speed overshoots and then reduced slightly.
   The integral gain (Ki) should then be increased up to the point where the speed becomes unstable and then reduced slightly.
   It may now be possible to increase the proportional gain to a higher value and the process should be repeated until the system response matches the ideal response as shown.
   The diagram shows the effect of incorrect P and I gain settings as well as the ideal response.
2. Pr **3.17** = 1, Bandwidth set-up
   If bandwidth based set-up is required, the drive can calculate Kp and Ki if the following parameters are set up correctly:
   - Pr **3.20** - Required bandwidth,
   - Pr **3.21** - Required damping factor,
   - Pr **3.18** - Motor and load inertia. The drive can be made to measure the motor and load inertia by performing an inertia measurement autotune (see Autotune Pr **0.40**, earlier in this table).
3. Pr **3.17** = 2, Compliance angle set-up
   If compliance angle based set-up is required, the drive can calculate Kp and Ki if the following parameters are set up correctly:
   - Pr **3.19** - Required compliance angle,
   - Pr **3.21** - Required damping factor,
   - Pr **3.18** - Motor and load inertia The drive can be made to measure the motor and load inertia by performing an inertia measurement autotune (see Autotune Pr **0.40**, earlier in this table).

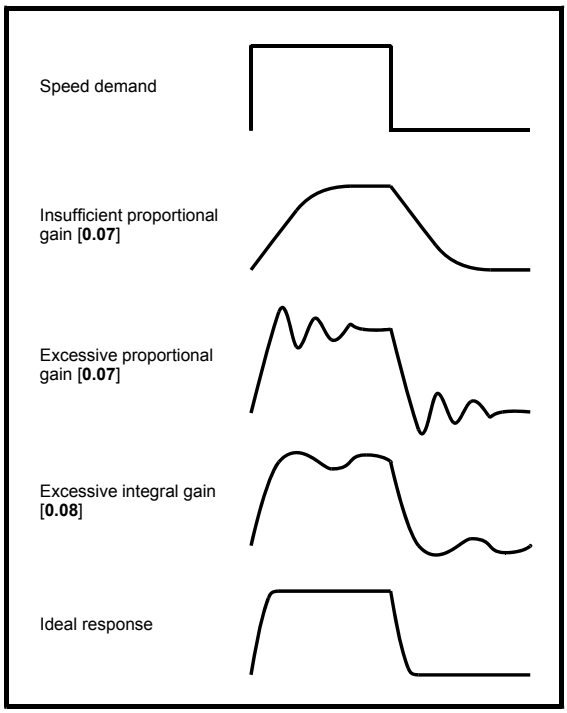

8.1.4 Servo motor control

Pr 0.46 {5.07} Motor rated current — **Defines the maximum motor continuous current**

The motor rated current parameter must be set to the maximum continuous current of the motor. The motor rated current is used in the following:

- Current limits (see section 8.3 *Current limits* on page 147, for more information)
- Motor thermal overload protection (see section 8.4 *Motor thermal protection* on page 147, for more information)

Pr 0.42 {5.11} Motor number of poles — **Defines the number of motor poles**

The motor number of poles parameter defines the number of electrical revolutions in one whole mechanical revolution of the motor. This parameter must be set correctly for the control algorithms to operate correctly. When Pr **0.42** is set to "Auto" the number of poles is 6.

Pr 0.40 {5.12} Autotune

There are five autotune tests available in servo mode, a short low speed test, a normal low speed test, an inertia measurement test, a stationary test to set up current controller gains and a minimal movement phasing test. A normal low speed should be done where possible as the drive measures the stator resistance and inductance of the motor, and from these calculates the current loop gains. An inertia measurement test should be performed separately to a short low speed or normal low speed autotune.

- A short low speed test will rotate the motor by 2 electrical revolutions (i.e. up to 2 mechanical revolutions) in the direction selected. The drive applies rated current to the motor during the test and measures the encoder phase angle (Pr **3.25**). The phase angle measurement is taken when the motor has stopped at the end of the test, therefore there must be no load on the motor when it is at rest for the correct angle to be measured. This test takes approximately 2 seconds to complete and can only be used where the rotor settles to a stable position in a short time. To perform a short low speed autotune, set Pr **0.40** to 1, and provide the drive with both an enable signal (on terminal 31) and a run signal (on terminal 26 or 27).
- A normal low speed test will rotate the motor by 2 electrical revolutions (i.e. up to 2 mechanical revolutions) in the direction selected. The drive applies rated current to the motor during the test and measures the encoder phase angle (Pr **3.25**). The phase angle measurement is taken when the motor has stopped at the end of the test, therefore there must be no load on the motor when it is at rest for the correct angle to be measured. The motor resistance (Pr **5.17**) and inductance (Pr **5.24**) are then measured, and the values are used to set up the current loop gains (Pr **0.38** {**4.13**} and Pr **0.39** {**4.14**}). The whole test takes approximately 20 seconds and can be used with motors that take time to settle after the rotor has moved. During the motor inductance measurement the drive applies current pulses to the motor that produces flux that opposes the flux produced by the magnets. The maximum current applied is a quarter of rated current (Pr **0.46**). This current is unlikely to affect the motor magnets, however, if this level of current could permanently de-magnetise the magnets the rated current should be set to a lower level for the tests to avoid this. To perform a normal low speed autotune, set Pr **0.40** to 2, and provide the drive with both an enable signal (on terminal 31) and a run signal (on terminal 26 or 27).

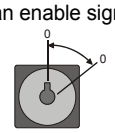

- The inertia measurement test can measure the total inertia of the load and the motor. This is used to set the speed loop gains (see *Speed loop gains*) and to provide torque feed-forwards when required during acceleration.

  During the inertia measurement test the drive attempts to accelerate the motor in the direction selected up to $^3/_4$ x rated load rpm and then back to standstill. The drive uses rated torque/16, but if the motor cannot be accelerated to the required speed the drive then increases the torque progressively to x$^1/_8$, x$^1/_4$, x$^1/_2$ and x1 rated torque. If the required speed is not achieved on the final attempt the test is aborted and a tunE1 trip is initiated. If the test is successful the acceleration and deceleration times are used to calculate the motor and load inertia which is then written to Pr **3.18**. The value of the value of motor torque per amp in Pr **5.32** and the motor rated speed in Pr **5.08** must be set up correctly before performing an inertia measurement test. To perform an Inertia measurement autotune, set Pr **0.40** to 3, and provide the drive with both an enable signal (on terminal 31) and a run signal (on terminal 26 or 27).
- The stationary test to set up current controller gains measures the stator resistance and the transient inductance of the motor, calculates the current loop gains and updates the current loop gain parameters. This test does not measure the encoder phase angle. This test should only be performed when the correct phasing angle has been set in Pr **0.43**. If the phasing angle is not correct the motor may move and the results may be incorrect. To perform a stationary test to set up current controller gains, set Pr **0.40** to 4, and provide the drive with both an enable signal (on terminal 31) and a run signal (on terminal 26 or 27).
- A minimal movement phasing test can measure the encoder phase offset by moving the motor through a small angle. Short current pulses are applied to the motor to produce a small movement and then to move the motor back to the original position. The size and length of the pulses are gradually increased (up to a maximum of motor rated current) until the movement is approximately at the level defined by Pr **5.38** electrical degrees. The resulting movements are used to estimate the phase angle. To perform a minimal movement phasing test, set Pr **0.40** to 5, and provide the drive with both an enable signal (on terminal 31) and a run signal (on terminal 26 or 27).

Following the completion of an autotune test the drive will go into the inhibit state. The drive must be placed into a controlled disable condition before the drive can be made to run at the required reference. The drive can be put in to a controlled disable condition by removing the SAFE TORQUE OFF signal from terminal 31, setting the drive enable parameter Pr **6.15** to OFF (0) or disabling the drive via the control word (Pr **6.42** & Pr **6.43**).

Current loop gains (Pr 0.38 {4.13} / Pr 0.39 {4.14})

The current loop gains proportional (Kp) and integral (Ki) gains control the response of the current loop to a change in current (torque) demand. The default values give satisfactory operation with most motors. However, for optimal performance in dynamic applications it may be necessary to change the gains to improve the performance. The proportional gain (Pr **4.13**) is the most critical value in controlling the performance. The values for the current loop gains can be calculated by one of the following:

- During a stationary or rotating autotune (see *Autotune Pr **0.40***, earlier in this table) the drive measures the stator resistance (Pr **5.17**) and transient inductance (Pr **5.24**) of the motor and calculates the current loop gains.
- By setting Pr **0.40** to 6 the drive will calculate the current loop gains from the values of stator resistance (Pr **5.17**) and transient inductance (Pr **5.24**) set in the drive.

This will give a step response with minimum overshoot after a step change of current reference. The proportional gain can be increased by a factor of 1.5 giving a similar increase in bandwidth; however, this gives a step response with approximately 12.5% overshoot. The equation for the integral gain gives a conservative value. In some applications where it is necessary for the reference frame used by the drive to dynamically follow the flux very closely (i.e. high speed closed-loop induction motor applications) the integral gain may need to have a significantly higher value.

Speed loop gains (Pr 0.07 {3.10}, Pr 0.08 {3.11}, Pr 0.09 {3.12})

The speed loop gains control the response of the speed controller to a change in speed demand. The speed controller includes proportional (Kp) and integral (Ki) feed forward terms, and a differential (Kd) feedback term. The drive holds two sets of these gains and either set may be selected for use by the speed controller with Pr **3.16**. If Pr **3.16** = 0, gains Kp1, Ki1 and Kd1 (Pr **0.07** to Pr **0.09**) are used, and if Pr **3.16** = 1, gains Kp2, Ki2 and Kd2 (Pr **3.13** to Pr **3.15**) are used. Pr **3.16** may be changed when the drive is enabled or disabled. If the load is predominantly a constant inertia and constant torque, the drive can calculate the required Kp and Ki gains to give a required compliance angle or bandwidth dependant on the setting of Pr **3.17**.

*Proportional gain (Kp), Pr **0.07 {3.10}** and Pr **3.13***

If the proportional gain has a value and the integral gain is set to zero the controller will only have a proportional term, and there must be a speed error to produce a torque reference. Therefore as the motor load increases there will be a difference between the reference and actual speeds. This effect, called regulation, depends on the level of the proportional gain, the higher the gain the smaller the speed error for a given load. If the proportional gain is too high either the acoustic noise produced by speed feedback quantization becomes unacceptable, or the closed-loop stability limit is reached.

*Integral gain (Ki), Pr **0.08 {3.11}** and Pr **3.14***

The integral gain is provided to prevent speed regulation. The error is accumulated over a period of time and used to produce the necessary torque demand without any speed error. Increasing the integral gain reduces the time taken for the speed to reach the correct level and increases the stiffness of the system, i.e. it reduces the positional displacement produced by applying a load torque to the motor. Unfortunately increasing the integral gain also reduces the system damping giving overshoot after a transient. For a given integral gain the damping can be improved by increasing the proportional gain. A compromise must be reached where the system response, stiffness and damping are all adequate for the application.

*Differential gain (Kd), Pr **0.09 {3.12}** and Pr **3.15***

The differential gain is provided in the feedback of the speed controller to give additional damping. The differential term is implemented in a way that does not introduce excessive noise normally associated with this type of function. Increasing the differential term reduces the overshoot produced by under-damping, however, for most applications the proportional and integral gains alone are sufficient.

There are three methods of tuning the speed loop gains dependant on the setting of Pr **3.17**:

1. Pr **3.17** = 0, User set-up.
   This involves the connecting of an oscilloscope to analog output 1 to monitor the speed feedback.
   Give the drive a step change in speed reference and monitor the response of the drive on the oscilloscope.
   The proportional gain (Kp) should be set up initially. The value should be increased up to the point where the speed overshoots and then reduced slightly.
   The integral gain (Ki) should then be increased up to the point where the speed becomes unstable and then reduced slightly.
   It may now be possible to increase the proportional gain to a higher value and the process should be repeated until the system response matches the ideal response as shown.
   The diagram shows the effect of incorrect P and I gain settings as well as the ideal response.
2. Pr **3.17** = 1, Bandwidth set-up
   If bandwidth based set-up is required, the drive can calculate Kp and Ki if the following parameters are set up correctly:
   - Pr **3.20** - Required bandwidth,
   - Pr **3.21** - Required damping factor,
   - Pr **5.32** - Motor torque per amp (Kt).
   - Pr **3.18** - Motor and load inertia. The drive can be made to measure the motor and load inertia by performing an inertia measurement autotune (see Autotune Pr **0.40**, earlier in this table).
3. Pr **3.17** = 2, Compliance angle set-up
   If compliance angle based set-up is required, the drive can calculate Kp and Ki if the following parameters are set up correctly:
   - Pr **3.19** - Required compliance angle,
   - Pr **3.21** - Required damping factor,
   - Pr **5.32** - Motor torque per amp (Kt).
   - Pr **3.18** - Motor and load inertia The drive can be made to measure the motor and load inertia by performing an inertia measurement autotune (see Autotune Pr **0.40**, earlier in this table).

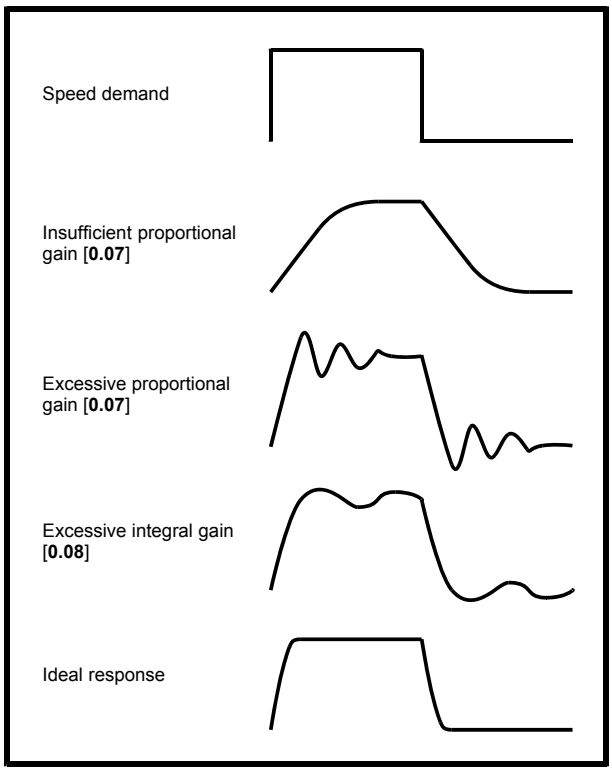

8.2 Maximum motor rated current

The maximum motor rated current allowed by the drive is greater than the maximum Heavy Duty current rating in Pr **11.32**. The ratio between the Normal Duty rating and the Heavy Duty rating (Pr **11.32**) varies between drive sizes. The values for the Normal and Heavy Duty rating can be found in section 2.1 *Ratings* on page 13.

If the motor rated current (Pr **0.46**) is set above the maximum Heavy Duty current rating (Pr **11.32**), the current limits and the motor thermal protection scheme are modified (see *section 8.3 Current limits* and *section 8.4 Motor thermal protection* , for more information).

8.3 Current limits

The default settings for the current limit parameters for sizes 0 to 5 are:

- 165% x motor rated current for open loop mode
- 175% x motor rated current for closed loop vector and servo modes (except SP2403 which is 150.1% for open loop, 175% for closed loop vector and 161.2% for servo).

The default settings for the current limit parameters for Unidrive SP size 6 are:

- 138.1% x motor rated current for open loop mode
- 165.7% x motor rated current for closed loop vector mode
- 150% x motor rated current for servo mode

There are three parameters which control the current limits:

- Motoring current limit: power flowing from the drive to the motor
- Regen current limit: power flowing from the motor to the drive
- Symmetrical current limit: current limit for both motoring and regen operation

The lowest of either the motoring and regen current limit, or the symmetrical current limit applies.

The maximum setting of these parameters depends on the values of motor rated current, drive rated current and the power factor.

Increasing the motor rated current (Pr **0.46**/**5.07**) above the Heavy Duty rating (default value), will automatically reduce the current limits in Pr **4.05** to Pr **4.07**. If the motor rated current is then set to or below the Heavy Duty rating, the current limits will be left at their reduced values.

The drive can be oversized to permit a higher current limit setting to provide higher accelerating torque as required up to a maximum of 1000%.

8.4 Motor thermal protection

The drive models the temperature of the motor using the motor rated current (Pr **5.07**), the thermal time constant (Pr **4.15**), whether low speed thermal protection mode has been enabled (Pr **4.25**) and the actual current flowing at any point in time. Pr **4.19** gives the estimated motor temperature as a percentage of maximum temperature.

The temperature of the motor (Pr **4.19**) as a percentage of maximum temperature, with a constant current magnitude of I, constant value of K and constant value of Motor rated current (Pr **5.07**) after time t is given by:

$$\text{Percentage motor temperature (Pr 4.19)} = [I^2 / (K \times \text{Motor rated current})^2] (1 - e^{-t/\tau}) \times 100\%$$

This assumes that the maximum allowed motor temperature is produced by K x Motor rated current and that τ is the thermal time constant of the point in the motor that reaches its maximum allowed temperature first. τ is defined by Pr **4.15**. If Pr **4.15** has a value between 0.0 and 1.0 the thermal time constant is taken as 1.0.

The value of K is defined as shown in Figure 8-1 and Figure 8-2.

For both Heavy and Normal duty ratings, Pr **4.25** can be used to select two alternative protection characteristics.

Figure 8-1 Motor thermal protection (Heavy Duty)

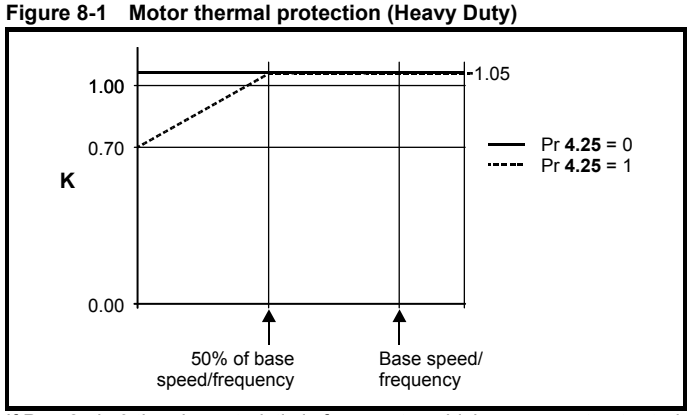

If Pr **4.25** is 0 the characteristic is for a motor which can operate at rated current over the whole speed range. Induction motors with this type of characteristic normally have forced cooling. If Pr **4.25** is 1 the characteristic is intended for motors where the cooling effect of motor fan reduces with reduced motor speed below 50% of base speed/ frequency. The maximum value for K is 1.05, so that above the knee of the characteristics the motor can operate continuously up to 105% current.

Figure 8-2 Motor thermal protection (Normal Duty)

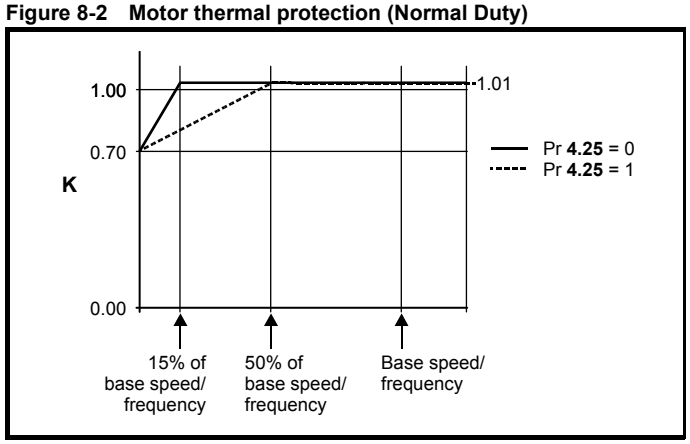

Both settings of Pr **4.25** are intended for motors where the cooling effect of the motor fan reduces with reduced motor speed, but with different speeds below which the cooling effect is reduced. If Pr **4.25** is 0 the characteristic is intended for motors where the cooling effect reduces with motor speed below 15% of base speed/frequency. If Pr **4.25** is 1 the characteristic is intended for motors where the cooling effect reduces with motor speed below 50% of base speed/frequency. The maximum value for K is 1.01, so that above the knee of the characteristics the motor can operate continuously up to 101% current.

When the estimated temperature in Pr **4.19** reaches 100% the drive takes some action depending on the setting of Pr **4.16**. If Pr **4.16** is 0, the drive trips when Pr **4.19** reaches 100%. If Pr **4.16** is 1, the current limit is reduced to (K - 0.05) x 100% when Pr **4.19** reaches 100%.

The current limit is set back to the user defined level when Pr **4.19** falls below 95%. The thermal model temperature accumulator is reset to zero at power-up and accumulates the temperature of the motor while the drive remains powered-up. If the rated current defined by Pr **5.07** is altered, the accumulator is reset to zero.

The default setting of the thermal time constant (Pr **4.15**) is 89s for an induction motor (open loop and closed loop vector), which is equivalent to an overload of 150% for 60s from cold. The default value for a servo motor is 20s, which is equivalent to an overload of 175% for 9s from cold.

The time for the drive to trip from cold with constant motor current is given by:

$$T_{trip} = -(Pr\ \mathbf{4.15}) \times \ln(1 - (K \times Pr\ \mathbf{5.07} / Pr\ \mathbf{4.01})^2)$$

Alternatively the thermal time constant can be calculated from the trip time with a given current from:

$$Pr\ \mathbf{4.15} = -T_{trip} / \ln(1 - (K / Overload)^2)$$

The maximum value for the thermal time constant can be increased up to a maximum value of 3000s to allow an increased overload if the motor thermal characteristics permit.

For applications using CT Dynamics Unimotors the thermal time constants can be found in the Unimotor manual.

8.5 Switching frequency

The default switching frequency is 3kHz (6kHz in Servo mode), however this can be increased up to a maximum of 16kHz by Pr **5.18** (dependent on drive size). The available switching frequencies are shown below.

Table 8-1 Available switching frequencies

Drive size	Model	3kHz	4kHz	6kHz	8kHz	12kHz	16kHz
0	All	✓	✓	✓	✓	✓	✓
1	All	✓	✓	✓	✓	✓	✓
2	All	✓	✓	✓	✓	✓	✓
3	SP320X	✓	✓	✓	✓	✓	
	SP3401 & SP3402	✓	✓	✓	✓	✓	✓
	SP3403	✓	✓	✓	✓	✓	
	SP350X	✓	✓	✓	✓		
4	All	✓	✓	✓	✓		
5	All	✓	✓	✓	✓		
6	All	✓	✓	✓			

If switching frequency is increased from 3kHz the following apply:

1. Increased heat loss in the drive, which means that derating to the output current must be applied.
   See the derating tables for switching frequency and ambient temperature in section 12.1.1 *Power and current ratings (Derating for switching frequency and temperature)* .
2. Reduced heating of the motor - due to improved output waveform quality.
3. Reduced acoustic noise generated by the motor.
4. Increased sample rate on the speed and current controllers. A trade off must be made between motor heating, drive heating and the demands of the application with respect to the sample time required.

Table 8-2 Sample rates for various control tasks at each switching frequency

	3, 6, 12 kHz	4, 8, 16 kHz	Open loop	Closed loop vector and Servo
Level 1	3kHz = 167µs 6kHz = 83µs 12kHz = 83µs	125µs	Peak limit	Current controllers
Level 2	250µs		Current limit and ramps	Speed controller and ramps
Level 3	1ms		Voltage controller	
Level 4	4ms		Time critical user interface	
Background			Non-time critical user interface	

8.6 High speed operation

8.6.1 Encoder feedback limits

The maximum encoder frequency should be prevented from exceeding 500kHz (or 410kHz for software V01.06.00 and earlier). In closed loop and servo modes the maximum speed that can be entered in to the speed reference clamps (Pr **1.06** and Pr **1.07**) can be limited by the drive. This is defined by the following (subject to an absolute maximum of 40,000rpm):

$$\text{Maximum speed limit (rpm)} = \frac{500\text{kHz} \times 60}{\text{ELPR}} = \frac{3.0 \times 10^7}{\text{ELPR}}$$

Where:

ELPR is the equivalent encoder lines per revolution and is the number of lines that would be produced by a quadrature encoder.

- Quadrature encoder ELPR = number of lines per revolution
- F and D encoder ELPR = number of lines per revolution / 2
- SINCOS encoder ELPR = number of sine waves per revolution

This maximum speed limit is defined by the device selected with the speed feedback selector (Pr **3.26**), and the ELPR set for the position feedback device. In closed-loop vector mode it is possible to disable this limit via Pr **3.24**, so that the drive can be switched between operation with and without feedback when the speed becomes too high for the feedback device. The maximum speed limit is defined as above when Pr **3.24** = 0 or 1, and is 40,000rpm when Pr **3.24** = 2 or 3.

8.6.2 Field weakening (constant power) operation

(Open loop and closed loop vector mode only)

The drive can be used to run an induction machine above synchronous speed into the constant power region. The speed continues to increase and the available shaft torque reduces. The characteristics below show the torque and output voltage characteristics as the speed is increased above the rated value.

Figure 8-3 Torque and rated voltage against speed

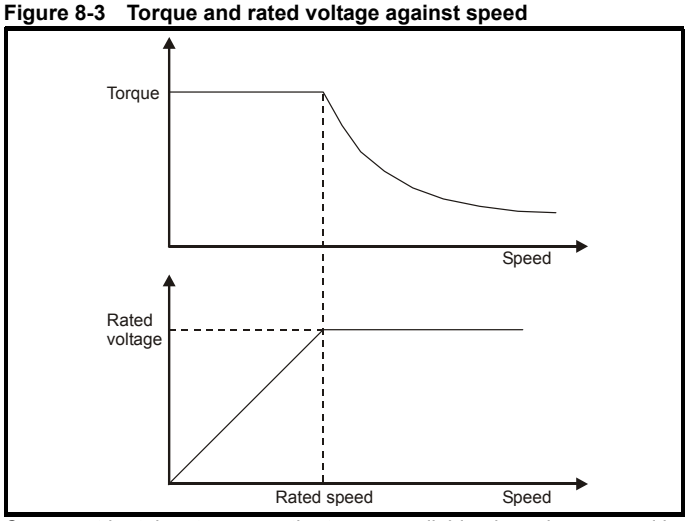

Care must be taken to ensure the torque available above base speed is sufficient for the application to run satisfactorily.

The saturation breakpoint parameters (Pr **5.29** and Pr **5.30**) found during the autotune in closed loop vector mode ensure the magnetizing current is reduced in the correct proportion for the specific motor. (In open loop mode the magnetizing current is not actively controlled.)

8.6.3 Servo high speed operation

High speed servo mode is enabled by setting Pr **5.22** =1. Care must be taken when using this mode with servo motors to avoid damaging the drive. The voltage produced by the servo motor magnets is proportional to speed. For high speed operation the drive must apply currents to the motor to counter-act the flux produced by the magnets. It is possible to operate the motor at very high speeds that would give a very high motor terminal voltage, but this voltage is prevented by the action of the drive.

If however, the drive is disabled (or tripped) when the motor voltages would be higher than the rating of the drive without the currents to counter-act the flux from the magnets, it is possible to damage the drive. If high speed mode is enabled the motor speed must be limited to the levels given in the table below unless an additional hardware protection system is used to limit the voltages applied to the drive output terminals to a safe level.

Drive voltage rating	Maximum motor speed (rpm)	Maximum safe line to line voltage at the motor terminals (V rms)
200	400 x 1000 / (Ke x √2)	400 / √2
400	800 x 1000 / (Ke x √2)	800 / √2
575	955 x 1000 / (Ke x √2)	955 / √2
690	1145 x 1000 / (Ke x √2)	1145 / √2

Ke is the ratio between r.m.s. line to line voltage produced by the motor and the speed in V/1000rpm. Care must also be taken not to de-magnetize the motor. The motor manufacturer should always be consulted before using this mode.

8.6.4 Switching frequency

With a default switching frequency of 3 kHz the maximum output frequency should be limited to 250 Hz. Ideally a minimum ratio of 12:1 should be maintained between the switching frequency and the output frequency. This ensures the number of switchings per cycle is sufficient to ensure the output waveform quality is maintained at a minimum level. If this is not possible, quasi-square switching should be enabled (Pr **5.20** =1). The output waveform will be quasi square above base speed ensuring a symmetrical output waveform, which results in a better quality output than would otherwise result.

8.6.5 Maximum speed / frequency

In open loop mode the maximum frequency is 3,000 Hz.

In closed loop vector mode the maximum output frequency is 600 Hz.

In servo mode the maximum output frequency is 1250Hz, however the speed is limited by the voltage constant (Ke) of the motor. Ke is a specific constant for the servo motor being used. It can normally be found on the motor data sheet in V/krpm (volts per 1,000rpm).

8.6.6 Quasi-Square wave (open-loop only)

The maximum output voltage level of the drive is normally limited to an equivalent of the drive input voltage minus voltage drops within the drive (the drive will also retain a few percent of the voltage in order to maintain current control). If the motor rated voltage is set at the same level as the supply voltage, some pulse deletion will occur as the drive output voltage approaches the rated voltage level. If Pr **5.20** (Quasi-square wave enable) is set to 1 the modulator will allow over modulation, so that as the output frequency increases beyond the rated frequency the voltage continues to increase above the rated voltage. The modulation depth will increase beyond unity; first producing trapezoidal and then quasi-square waveforms.

This can be used for example:

- To obtain high output frequencies with a low switching frequency which would not be possible with space vector modulation limited to unity modulation depth,

or

- In order to maintain a higher output voltage with a low supply voltage.

The disadvantage is that the machine current will be distorted as the modulation depth increases above unity, and will contain a significant amount of low order odd harmonics of the fundamental output frequency. The additional low order harmonics cause increased losses and heating in the motor.

9 SMARTCARD operation

9.1 Introduction

This is a standard feature that enables simple configuration of parameters in a variety of ways. The SMARTCARD can be used for:

- Parameter copying between drives
- Saving whole drive parameter sets
- Saving 'differences from default' parameter sets
- Storing Onboard PLC programs
- Automatically saving all user parameter changes for maintenance purposes
- Loading complete motor map parameters

Size 0

When inserting the SMARTCARD, always ensure that ST SP0 arrow points upwards.

Size 1 to 6

The SMARTCARD is located at the top of the module under the drive display (if installed) on the left-hand side. Ensure the SMARTCARD is inserted with the SP1-9 arrow pointing upwards.

The drive only communicates with the SMARTCARD when commanded to read or write, meaning the card may be "hot swapped".

WARNING

Encoder phase angle (servo mode only)

With drive software version V01.08.00 onwards, the encoder phase angles in Pr **3.25** and Pr **21.20** are copied to the SMARTCARD when using any of the SMARTCARD transfer methods.

With drive software version V01.05.00 to V01.07.01, the encoder phase angles in Pr **3.25** and Pr **21.20** are only copied to the SMARTCARD when using either Pr **0.30** set to Prog (2) or Pr **xx.00** set to 3yyy.

This is useful when the SMARTCARD is used to back-up the parameter set of a drive but caution should be used if the SMARTCARD is used to transfer parameter sets between drives.

Unless the encoder phase angle of the servo motor connected to the destination drive is known to be the same as the servo motor connected to the source drive, an autotune should be performed or the encoder phase angle should be entered manually into Pr **3.25** (or Pr **21.20**). If the encoder phase angle is incorrect the drive may lose control of the motor resulting in an O.SPd or Enc10 trip when the drive is enabled.

With drive software version V01.04.00 and earlier, or when using software version V01.05.00 to V01.07.01 and Pr **xx.00** set to 4yyy is used, then the encoder phase angles in Pr **3.25** and Pr **21.20** are not copied to the SMARTCARD. Therefore, Pr **3.25** and Pr **21.20** in the destination would not be changed during a transfer of this data block from the SMARTCARD.

WARNING

Be aware of possible live terminals when inserting or removing the SMATRTCARD

Figure 9-1 Installation of the SMARTCARD

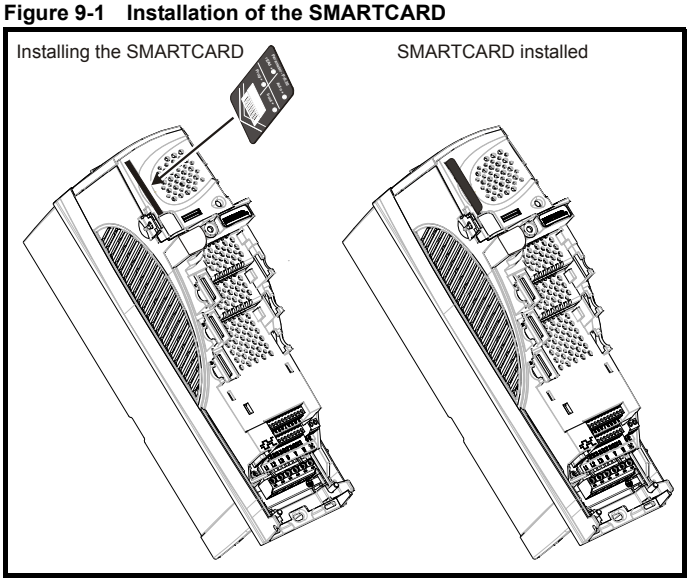

Easy saving and reading

Figure 9-2 Basic SMARTCARD operation

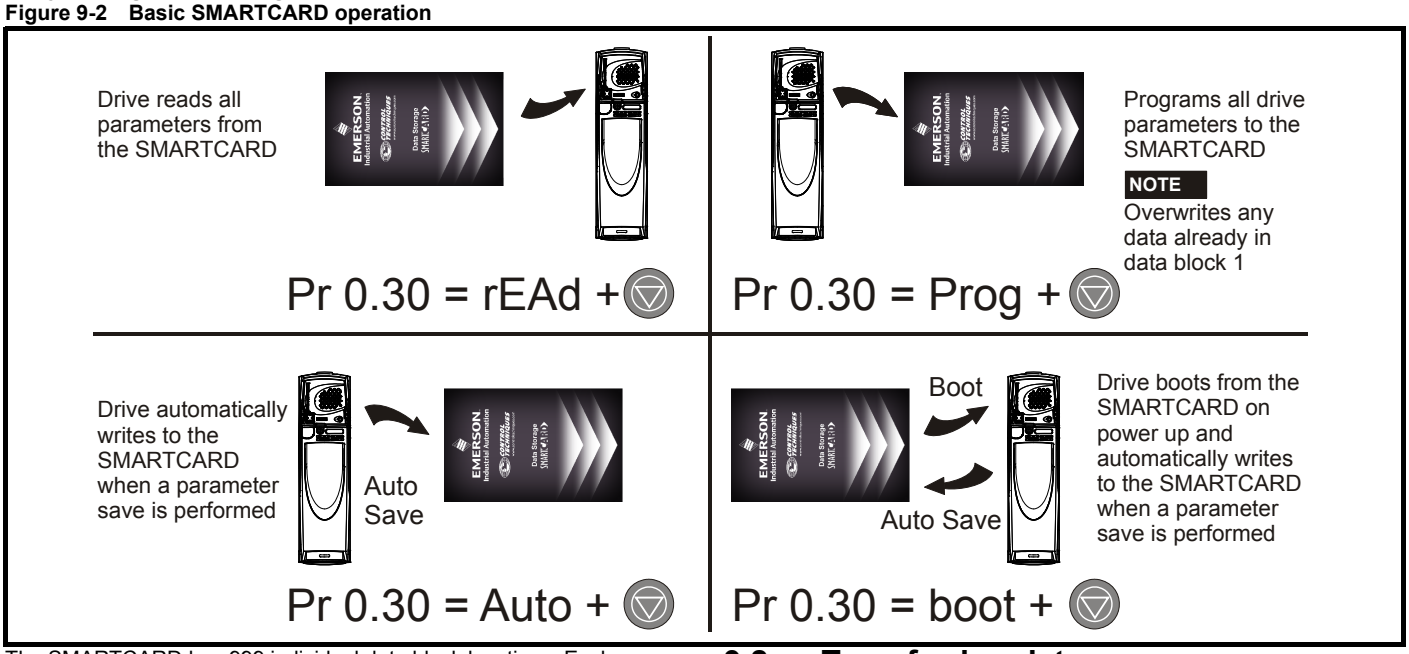

The SMARTCARD has 999 individual data block locations. Each individual location from 1 to 499 can be used to store data until the capacity of the SMARTCARD is used. With software V01.07.00 and later the drive can support SMARTCARDs with a capacity of between 4kB and 512kB. With software V01.06.02 and earlier the drive can support SMARTCARDs with a capacity of 4kB.

The data block locations of the SMARTCARD are arranged to have the following usage:

Table 9-1 SMARTCARD data blocks

Data Block	Type	Example Use
1 to 499	Read / Write	Application set ups
500 to 999	Read Only	Macros

'Differences from default' parameter sets will be much smaller than whole parameter sets and thus take up a lot less memory as most applications only require a few parameters to be changed from the default setting.

The whole card may be protected from writing or erasing by setting the read-only flag as detailed section 9.2.9 *9888 / 9777 - Setting and clearing the SMARTCARD read only flag* on page 153.

Data transfer to or from the SMARTCARD is indicated by one the following:

- SM-Keypad/SP0 Keypad: The decimal point after the fourth digit in the upper display will flash.
- SM-Keypad Plus: The symbol 'CC' will appear in the lower left hand corner of the display

The card should not be removed during data transfer, as the drive will produce a trip. If this occurs then either the transfer should be reattempted or in the case of a card to drive transfer, default parameters should be loaded.

9.2 Transferring data

Data transfer, erasing and protecting the information is performed by entering a code in Pr **xx.00** and then resetting the drive as shown in Table 9-2.

Table 9-2 SMARTCARD codes

Code	Action
2001	Transfer drive parameters as difference from defaults to a bootable SMARTCARD block in data block number 001
3yyy	Transfer drive parameters to a SMARTCARD block number yyy
4yyy	Transfer drive data as difference from defaults to SMARTCARD block number yyy
5yyy	Transfer drive Onboard PLC program to SMARTCARD block number yyy
6yyy	Transfer SMARTCARD data block yyy to the drive
7yyy	Erase SMARTCARD data block yyy
8yyy	Compare drive parameters with block yyy
9555	Clear SMARTCARD warning suppression flag (V01.07.00 and later)
9666	Set SMARTCARD warning suppression flag (V01.07.00 and later)
9777	Clear SMARTCARD read-only flag
9888	Set SMARTCARD read-only flag
9999	Erase SMARTCARD

Where yyy indicates the block number 001 to 999. See Table 9-1 for restrictions on block numbers.

NOTE

If the read only flag is set then only codes 6yyy or 9777 are effective.

9.2.1 Writing to the SMARTCARD

3yyy - Transfer data to the SMARTCARD

The data block contains the complete parameter data from the drive, i.e. all user save (US) parameters except parameters with the NC coding bit set. Power-down save (PS) parameters are not transferred to the SMARTCARD.

With software V01.06.02 and earlier, a save must have been performed on the drive to transfer the parameters from the drive RAM to the EEPROM before the transfer to the SMARTCARD is carried out.

4yyy - Write default differences to a SMARTCARD

The data block only contains the parameter differences from the last time default settings were loaded.

Six bytes are required for each parameter difference. The data density is not as high as when using the 3yyy transfer method as described in the previous section, but in most cases the number of differences from default is small and the data blocks are therefore smaller. This method can be used for creating drive macros. Power-down save (PS) parameters are not transferred to the SMARTCARD.

The data block format is different depending on the software version. The data block holds the following parameters:

Software V01.06.02 and earlier

All user save (US) parameters, except those with the NC (Not copied) coding bit set or those that do not have a default value, can be transferred to the SMARTCARD.

Software V01.07.xx

All user save (US) parameters, except those with the NC (Not copied) coding bit set or those that do not have a default value, can be transferred to the SMARTCARD. In addition to these parameters all menu 20 parameters (except Pr **20.00**), can be transferred to the SMARTCARD even though they are not user save parameters and have the NC coding bit set.

Software V01.08.00 onwards

All user save (US) parameters including those that do not have a default value (i.e. Pr **3.25** or Pr **21.20** *Encoder phase angle*), but not including those with the NC (Not copied) coding bit set can be transferred to the SMARTCARD. In addition to these parameters all menu 20 parameters (except Pr **20.00**), can be transferred to the SMARTCARD even though they are not user save parameters and have the NC coding bit set.

It is possible to transfer parameters between drives with each of the different formats, however, the data block compare function does not work with data produced by different formats.

Writing a parameter set to the SMARTCARD (Pr 11.42 = Prog (2))

Setting Pr **11.42** to Prog (2) and resetting the drive will save the parameters to the SMARTCARD, i.e. this is equivalent to writing 3001 to Pr **xx.00**. All SMARTCARD trips apply except 'C.Chg'. If the data block already exists it is automatically overwritten. When the action is complete this parameter is automatically reset to nonE (0).

9.2.2 Reading from the SMARTCARD

6yyy - Read default differences from a SMARTCARD

When the data is transferred back to a drive, using 6yyy in Pr **xx.00**, it is transferred to the drive RAM and the drive EEPROM. A parameter save is not required to retain the data after power-down. Set up data for any Solutions Modules installed are stored on the card and are transferred to the destination drive. If the Solutions Modules are different between the source and destination drive, the menus for the slots where the Solutions Module categories are different are not updated from the card and will contain their default values after the copying action. The drive will produce a 'C.Optn' trip if the Solutions Modules installed to the source and destination drive are different or are in different slots. If the data is being transferred to a drive of a different voltage or current rating a 'C.rtg' trip will occur.

The following drive rating dependant parameters (RA coding bit set) will not be transferred to the destination drive by a SMARTCARD when the rating of the destination drive is different from the source drive and the file is a parameter file (i.e. created using the 3yyy transfer method). However, with software V01.09.00 and later drive rating dependent parameters will be transferred if only the current rating is different and the file is a differences from default type file (i.e. created using the 4yyy transfer method). If drive rating dependant parameters are not transferred to the destination drive they will contain their default values.

Pr **2.08** *Standard ramp voltage*
Pr **4.05** to Pr **4.07** and Pr **21.27** to Pr **21.29** *Current limits*
Pr **4.24**, *User current maximum scaling*
Pr **5.07**, Pr **21.07** *Motor rated current*
Pr **5.09**, Pr **21.09** *Motor rated voltage*
Pr **5.10**, Pr **21.10** *Rated power factor*
Pr **5.17**, Pr **21.12** *Stator resistance*
Pr **5.18** *Switching frequency*
Pr **5.23**, Pr **21.13** *Voltage offset*
Pr **5.24**, Pr **21.14** *Transient inductance*
Pr **5.25**, Pr **21.24** *Stator inductance*
Pr **6.06** *DC injection braking current*
Pr **6.48** *Line power supply loss ride through detection level*

Reading a parameter set from the SMARTCARD (Pr 11.42 = rEAd (1))

Setting Pr **11.42** to rEAd (1) and resetting the drive will transfer the parameters from the card into the drive parameter set and the drive EEPROM, i.e. this is equivalent to writing 6001 to Pr **xx.00**. All SMARTCARD trips apply. Once the parameters are successfully copied this parameter is automatically reset to nonE (0). Parameters are saved to the drive EEPROM after this action is complete.

NOTE

This operation is only performed if data block 1 on the card is a full parameter set (3yyy transfer) and not a default difference file (4yyy transfer). If block 1 does not exist a 'C.dAt' trip occurs.

9.2.3 Auto saving parameter changes (Pr 11.42 = Auto (3))

This setting causes the drive to automatically save any changes made to menu 0 parameters on the drive to the SMARTCARD. The latest menu 0 parameter set in the drive is therefore always backed up on the SMARTCARD. Changing Pr **11.42** to Auto (3) and resetting the drive will immediately save the complete parameter set from the drive to the card, i.e. all user save (US) parameters except parameters with the NC coding bit set. Once the whole parameter set is stored only the individual modified menu 0 parameter setting is updated.

Advanced parameter changes are only saved to the card when Pr **xx.00** is set to a 1000 and the drive reset.

All SMARTCARD trips apply, except ‘C.Chg’. If the data block already contains information it is automatically overwritten.

If the card is removed when Pr **11.42** is set to 3 Pr **11.42** is then automatically set to nonE (0).

When a new SMARTCARD is installed Pr **11.42** must be set back to Auto (3) by the user and the drive reset so the complete parameter set is rewritten to the new SMARTCARD if auto mode is still required.

When Pr **11.42** is set to Auto (3) and the parameters in the drive are saved, the SMARTCARD is also updated, therefore the SMARTCARD becomes a copy of the drives stored configuration.

At power up, if Pr **11.42** is set to Auto (3), the drive will save the complete parameter set to the SMARTCARD. The drive will display ‘cArd’ during this operation. This is done to ensure that if a user puts a new SMARTCARD in during power down the new SMARTCARD will have the correct data.

NOTE

When Pr **11.42** is set to Auto (3) the setting of Pr **11.42** itself is saved to the drive EEPROM but NOT to the SMARTCARD.

9.2.4 Booting up from the SMARTCARD on every power up (Pr 11.42 = boot (4))

When Pr **11.42** is set to boot (4) the drive operates the same as Auto mode except when the drive is powered-up. The parameters on the SMARTCARD will be automatically transferred to the drive at power up if the following are true:

- A card is inserted in the drive
- Parameter data block 1 exists on the card
- The data in block 1 is type 1 to 5 (as defined in Pr **11.38**)
- Pr **11.42** on the card set to boot (4)

The drive will display 'boot' during this operation. If the drive mode is different from that on the card, the drive gives a 'C.Typ'. trip and the data is not transferred.

If 'boot' mode is stored on the copying SMARTCARD this makes the copying SMARTCARD the master device. This provides a very fast and efficient way of re-programming a number of drives.

If data block 1 contains a bootable parameter set and data block 2 contains an Onboard PLC program (type 17 as defined in Pr **11.38**), then if the drive software version is V01.07.00 and later, the onboard PLC program will be transferred to the drive at power up along with the parameter set in data block 1.

NOTE

'Boot' mode is saved to the card, but when the card is read, the value of Pr **11.42** is not transferred to the drive.

9.2.5 Booting up from the SMARTCARD on every power up (Pr xx.00 = 2001), software V01.08.00 and later

It is possible to create a difference from default bootable file by setting Pr **xx.00** to 2001 and resetting the drive. This type of file causes the drive to behave in the same way at power-up as a file created with boot mode set up with Pr **11.42**. The difference from the default file is that it has the added advantage of including menu 20 parameters.

Setting Pr **xx.00** to 2001 will overwrite data block 1 on the card if it already exists.

If a data block 2 exists and contains an Onboard PLC program (type 17 as defined in Pr **11.38**), this will also be loaded after the parameters have been transferred

A bootable difference from default file can only be created in one operation and parameters cannot be added as they are saved via menu 0.

9.2.6 8yyy - Comparing the drive full parameter set with the SMARTCARD values

Setting 8yyy in Pr **xx.00**, will compare the SMARTCARD file with the data in the drive. If the compare is successful Pr **xx.00** is simply set to 0. If the compare fails a 'C.cpr' trip is initiated.

9.2.7 7yyy / 9999 - Erasing data from the SMARTCARD

Data can be erased from the SMARTCARD either one block at a time or all blocks in one go.

- Setting 7yyy in Pr **xx.00** will erase SMARTCARD data block yyy.
- Setting 9999 in Pr **xx.00** will erase all SMARTCARD data blocks

9.2.8 9666 / 9555 - Setting and clearing the SMARTCARD warning suppression flag (V01.07.00 and later)

If the Solutions Modules installed to the source and destination drive are different or are in different slots the drive will produce a 'C.Optn' trip. If the data is being transferred to a drive of a different voltage or current rating a 'C.rtg' trip will occur. It is possible to suppress these trips by setting the warning suppression flag. If this flag is set the drive will not trip if the Solutions Module(s) or drive ratings are different between the source and destination drives. The Solutions Module or rating dependent parameters will not be transferred.

- Setting 9666 in Pr **xx.00** will set the warning suppression flag
- Setting 9555 in Pr **xx.00** will clear the warning suppression flag

9.2.9 9888 / 9777 - Setting and clearing the SMARTCARD read only flag

The SMART CARD may be protected from writing or erasing by setting the read only flag. If an attempt is made to write or erase a data block when the read only flag is set, a 'C.rdo' trip is initiated. When the read only flag is set only codes 6yyy or 9777 are effective.

- Setting 9888 in Pr **xx.00** will set the read only flag
- Setting 9777 in Pr **xx.00** will clear the read only flag.

9.3 Data block header information

Each data block stored on a SMARTCARD has header information detailing the following:

- A number which identifies the block (Pr **11.37**)
- The type of data stored in the block (Pr **11.38**)
- The drive mode if the data is parameter data (Pr **11.38**)
- The version number (Pr **11.39**)
- The checksum (Pr **11.40**)
- The read-only flag
- The warning suppression flag (V01.07.00 and later)

The header information for each data block which has been used can be viewed in Pr **11.38** to Pr **11.40** by increasing or decreasing the data block number set in Pr **11.37**.

Software V01.07.00 and later

If Pr **11.37** is set to 1000 the checksum parameter (Pr **11.40**) shows the number of 16 byte pages left on the card.

If Pr **11.37** is set to 1001 the checksum parameter (Pr **11.40**) shows the total capacity of the card in 16 byte pages. Therefore, for a 4kB card this parameter would show 254.

If Pr **11.37** is set to 1002 the checksum parameter (Pr **11.40**) shows the state of the read-only (bit 0) and warning suppression flags (bit 1).

Software version V01.11.00 and later: If Pr **11.37** is set to 1003, the checksum parameter (Pr **11.40**) shows the product identifier (255 = Unidrive SP, 1 = Commander GP20, 2 = Digitax ST, 3 = Affinity).

If there is no data on the card Pr **11.37** can only have values of 0 or 1000 to 1003.

Software V01.06.02 and earlier

If Pr **11.37** is set to 1000 the checksum parameter (Pr **11.40**) shows the number of bytes left on the card. If there is no data on the card Pr **11.37** can only have values of 0 or 1000.

The version number is intended to be used when data blocks are used as drive macros. If a version number is to be stored with a data block, Pr **11.39** should be set to the required version number before the data is transferred. Each time Pr **11.37** is changed by the user the drive puts the version number of the currently viewed data block in Pr **11.39**.

If the destination drive has a different drive mode to the parameters on the card, the drive mode will be changed by the action of transferring parameters from the card to the drive.

The actions of erasing a card, erasing a file, changing a menu 0 parameter, or inserting a new card will effectively set Pr **11.37** to 0 or the lowest file number in the card.

9.4 SMARTCARD parameters

Table 9-3 Key to parameter table coding

RW	Read / Write	RO	Read only	Uni	Unipolar
Bi	Bi-polar	Bit	Bit parameter	Txt	Text string
FI	Filtered	DE	Destination	NC	Not copied
RA	Rating dependent	PT	Protected	US	User save
PS	Power down save				

11.36 {0.29}	**SMARTCARD parameter data previously loaded**									
RO	Uni					NC	PT	US		
⇳	0 to 999				⇨	0				

This parameter shows the number of the data block last transferred from a SMARTCARD to the drive.

11.37	**SMARTCARD data number**									
RW	Uni					NC				
⇳	0 to 1003				⇨	0				

This parameter should have the data block number entered for which the user would like information displayed in Pr **11.38**, Pr **11.39** and Pr **11.40**.

11.38	SMARTCARD data type/mode								
RO	Txt					NC	PT		
⇳	0 to 18			⇨					

Gives the type/mode of the data block selected with Pr **11.37**:

Pr 11.38	String	Type/mode	Data stored
0	FrEE	Value when Pr **11.37** = 0, 1000 to 1003	
1		Reserved	
2	3OpEn.LP	Open-loop mode parameters	Data from EEPROM
3	3CL.VECt	Closed-loop vector mode parameters	
4	3SErVO	Servo mode parameters	
5	3rEgEn	Regen mode parameters	
5		Reserved	
6 to 8	3Un	Unused	
9		Reserved	
10	4OpEn.LP	Open-loop mode parameters	Defaults last loaded and differences
11	4CL.VECt	Closed-loop vector mode parameters	
12	4SErVO	Servo mode parameters	
13	4rEgEn	Regen mode parameters	
14 to 16	4Un	Unused	
17	LAddEr	Onboard PLC program	
18	Option	A Solutions Module file	

11.39	SMARTCARD data version								
RW	Uni					NC			
⇳	0 to 9,999			⇨	0				

Gives the version number of the data block selected in Pr **11.37**.

11.40	SMARTCARD data checksum								
R0	Uni					NC	PT		
⇳	0 to 65,335			⇨					

Gives the checksum of the data block selected in Pr **11.37**.

11.42 {0.30}	Parameter copying								
RW	Txt					NC		US*	
⇳	0 to 4			⇨	nonE (0)				

NOTE

If Pr **11.42** is equal to 1 or 2, this value is not transferred to the drive or saved to the EEPROM. If Pr **11.42** is set to a 3 or 4 the value is transferred.

nonE (0) = Inactive
rEAd (1) = Read parameter set from the SMARTCARD
Prog (2) = Programming a parameter set to the SMARTCARD
Auto (3) = Auto save
boot (4) = Boot mode

9.5 SMARTCARD trips

After an attempt to read, write or erase data to or from a SMARTCARD a trip may occur if there has been a problem with the command. The following trips indicate various problems as detailed in Table 9-4.

Table 9-4 Trip conditions

Trip	Diagnosis
C.Acc	**SMARTCARD trip: SMARTCARD Read / Write fail**
185	Check SMARTCARD is installed / located correctly Ensure SMARTCARD is not writing data to data location 500 to 999 Replace SMARTCARD
C.boot	**SMARTCARD trip: The menu 0 parameter modification cannot be saved to the SMARTCARD because the necessary file has not been created on the SMARTCARD**
177	A write to a menu 0 parameter has been initiated via the keypad with Pr **11.42** set to auto(3) or boot(4), but the necessary file on the SMARTCARD has not been created Ensure that Pr **11.42** is correctly set and reset the drive to create the necessary file on the SMARTCARD Re-attempt the parameter write to the menu 0 parameter
C.bUSY	**SMARTCARD trip: SMARTCARD can not perform the required function as it is being accessed by a Solutions Module**
178	Wait for the Solutions Module to finish accessing the SMARTCARD and then re-attempt the required function
C.Chg	**SMARTCARD trip: Data location already contains data**
179	Erase data in data location Write data to an alternative data location
C.Cpr	**SMARTCARD trip: The values stored in the drive and the values in the data block on the SMARTCARD are different**
188	Press the red reset button
C.dat	**SMARTCARD trip: Data location specified does not contain any data**
183	Ensure data block number is correct
C.Err	**SMARTCARD trip: SMARTCARD data is corrupted**
182	Ensure the card is located correctly Erase data and retry Replace SMARTCARD
C.Full	**SMARTCARD trip: SMARTCARD full**
184	Delete a data block or use a different SMARTCARD
C.Optn	**SMARTCARD trip: Solutions Modules installed are different between source drive and destination drive**
180	Ensure correct Solutions Modules are installed Ensure Solutions Modules are in the same Solutions Module slot Press the red reset button
C.Prod	**SMARTCARD trip: The data blocks on the SMARTCARD are not compatible with this product**
175	Erase all data on the SMARTCARD by setting Pr **xx.00** to 9999 and pressing the red reset button Replace SMARTCARD
C.rdo	**SMARTCARD trip: SMARTCARD has the Read only bit set**
181	Enter 9777 in Pr **xx.00** to allow SMARTCARD Read / Write access Ensure the drive is not writing to data locations 500 to 999 on the card

Table 9-4 Trip conditions

<table>
<tr><th>Trip</th><th>Diagnosis</th></tr>
<tr><td>C.rtg</td><td>SMARTCARD trip: The voltage and/or current rating of the source and destination drives are different</td></tr>
<tr><td>186</td><td>Drive rating dependent parameters (parameters with the RA coding) are likely to have different values and ranges with drives of different voltage and current ratings. Parameters with this attribute will not be transferred to the destination drive by SMARTCARDs when the rating of the destination drive is different from the source drive and the file is a parameter file. However, with software V01.09.00 and later drive rating dependent parameters will be transferred if only the current rating is different and the file is a differences from default type file.
Press the red reset button
Drive rating parameters are:
<table>
<tr><th>Parameter</th><th>Function</th></tr>
<tr><td>2.08</td><td>Standard ramp voltage</td></tr>
<tr><td>4.05/6/7, 21.27/8/9</td><td>Current limits</td></tr>
<tr><td>4.24</td><td>User current maximum scaling</td></tr>
<tr><td>5.07, 21.07</td><td>Motor rated current</td></tr>
<tr><td>5.09, 21.09</td><td>Motor rated voltage</td></tr>
<tr><td>5.10, 21.10</td><td>Rated power factor</td></tr>
<tr><td>5.17, 21.12</td><td>Stator resistance</td></tr>
<tr><td>5.18</td><td>Switching frequency</td></tr>
<tr><td>5.23, 21.13</td><td>Voltage offset</td></tr>
<tr><td>5.24, 21.14</td><td>Transient inductance</td></tr>
<tr><td>5.25, 21.24</td><td>Stator inductance</td></tr>
<tr><td>6.06</td><td>DC injection braking current</td></tr>
<tr><td>6.48</td><td>Line power supply loss ride through detection level</td></tr>
</table>
The above parameters will be set to their default values.</td></tr>
<tr><td>C.Typ</td><td>SMARTCARD trip: SMARTCARD parameter set not compatible with drive</td></tr>
<tr><td>187</td><td>Press the red reset button
Ensure destination drive type is the same as the source parameter file drive type</td></tr>
</table>

Table 9-5 SMARTCARD status indications

Lower display	Description	Lower display	Description
boot	A parameter set is being transferred from the SMARTCARD to the drive during power-up. For further information, please refer to section 9.2.4 *Booting up from the SMARTCARD on every power up (Pr 11.42 = boot (4))* .	**cArd**	The drive is writing a parameter set to the SMARTCARD during power-up. For further information, please refer to section 9.2.3 *Auto saving parameter changes (Pr 11.42 = Auto (3))* .

10 Onboard PLC

10.1 Onboard PLC and SYPTLite

The drive has the ability to store and execute a 4KB Onboard PLC ladder logic program without the need for additional hardware in the form of a Solutions Module.

The ladder logic program is written using SYPTLite, a Windows™ based ladder diagram editor allowing the development of programs for execution in Unidrive SP or SM-Applications Lite.

SYPTLite is designed to be easy to use and to make program development as simple as possible. The features provided are a sub-set of those in the SYPT program editor. SYPTLite programs are developed using ladder logic, a graphical language widely used to program PLCs (IEC61131-3). SYPTLite allows the user to "draw" a ladder diagram representing a program.

SYPTLite provides a complete environment for the development of ladder diagrams. Ladder diagrams can be created, compiled into user programs and downloaded to a Unidrive SP or SM-Applications Lite for execution, via the RJ45 serial communications port on the front of the drive. The run-time operation of the compiled ladder diagram on the target can also be monitored using SYPTLite and facilities are provided to interact with the program on the target by setting new values for target parameters.

SYPTLite is available on the CD which is supplied with the drive.

10.2 Benefits

The combination of the Onboard PLC and SYPTLite, means that the drive can replace nano and some micro PLCs in many applications. The Onboard PLC programs can consist of up to a maximum of 50 ladder logic rungs (up to 7 function blocks and 10 contacts per rung). The Onboard PLC program can also be transferred to and from a SMARTCARD for backup or quick commissioning/start-up

In addition to the basic ladder symbols, SYPTLite contains a sub-set of the function from the full version of SYPT. These include,

- Arithmetic blocks
- Comparison blocks
- Timers
- Counters
- Multiplexers
- Latches
- Bit manipulation

Typical applications for the Onboard PLC include,

- Ancillary pumps
- Fans and control valves
- Interlocking logic
- Sequences routines
- Custom control words.

10.3 Limitations

Compared with the Applications Modules (SM-Applications, SM-Applications Lite and SM-Applications Plus) when programmed with SYPT, the Onboard PLC program has the following limitations:

- The maximum program size is 4032 bytes including header and optional source code.
- The drive is rated for 100 program downloads. This limitation is imposed by the flash memory used to store the program within the drive.
- The user cannot create user variables. The user is only able to manipulate the drive parameter set.
- The program cannot be downloaded or monitored over CTNet. The program is only accessible via the drives RJ45 serial communications port.
- There are no real-time tasks, i.e. the scheduling rate of the program cannot be guaranteed. Applications Modules tasks such as Clock, Event, Pos0 or Speed are not available. The Onboard PLC should not be used for time-critical applications. For time-critical applications Unidrive SP and an SM-Applications Plus, SM-Applications or SM-Applications Lite should be used.
- The program runs at a low priority. The drive provides a single background task in which to run a ladder diagram. The drive is prioritized to perform its major functions first, e.g. motor control, and will use any remaining processing time to execute the ladder diagram as a background activity. As the drive's processor becomes more heavily loaded, less time is spent executing the program.

Figure 10-1 Onboard PLC program scheduling

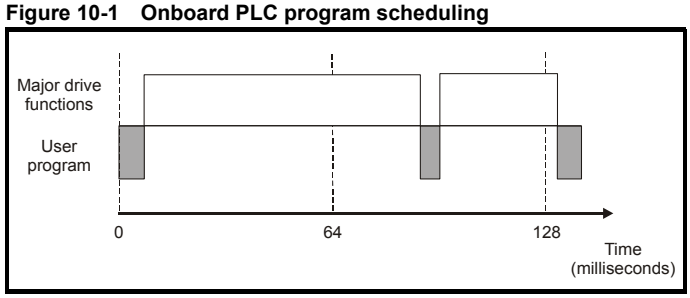

The user program is scheduled for a short period approximately once every 64ms. The time for which the program is scheduled will vary between 0.2ms and 2ms depending on the loading of the drive's processor.

When scheduled, several scans of the user program may be performed. Some scans may execute in microseconds. However, when the main drive functions are scheduled there will be a pause in the execution of the program causing some scans to take many milliseconds. SYPTLite displays the average execution time calculated over the last 10 scans of the user program.

The Onboard PLC and SYPTLite form the first level of functionality in a range of programmable options for Unidrive SP.

Figure 10-2 Programming options for Unidrive SP

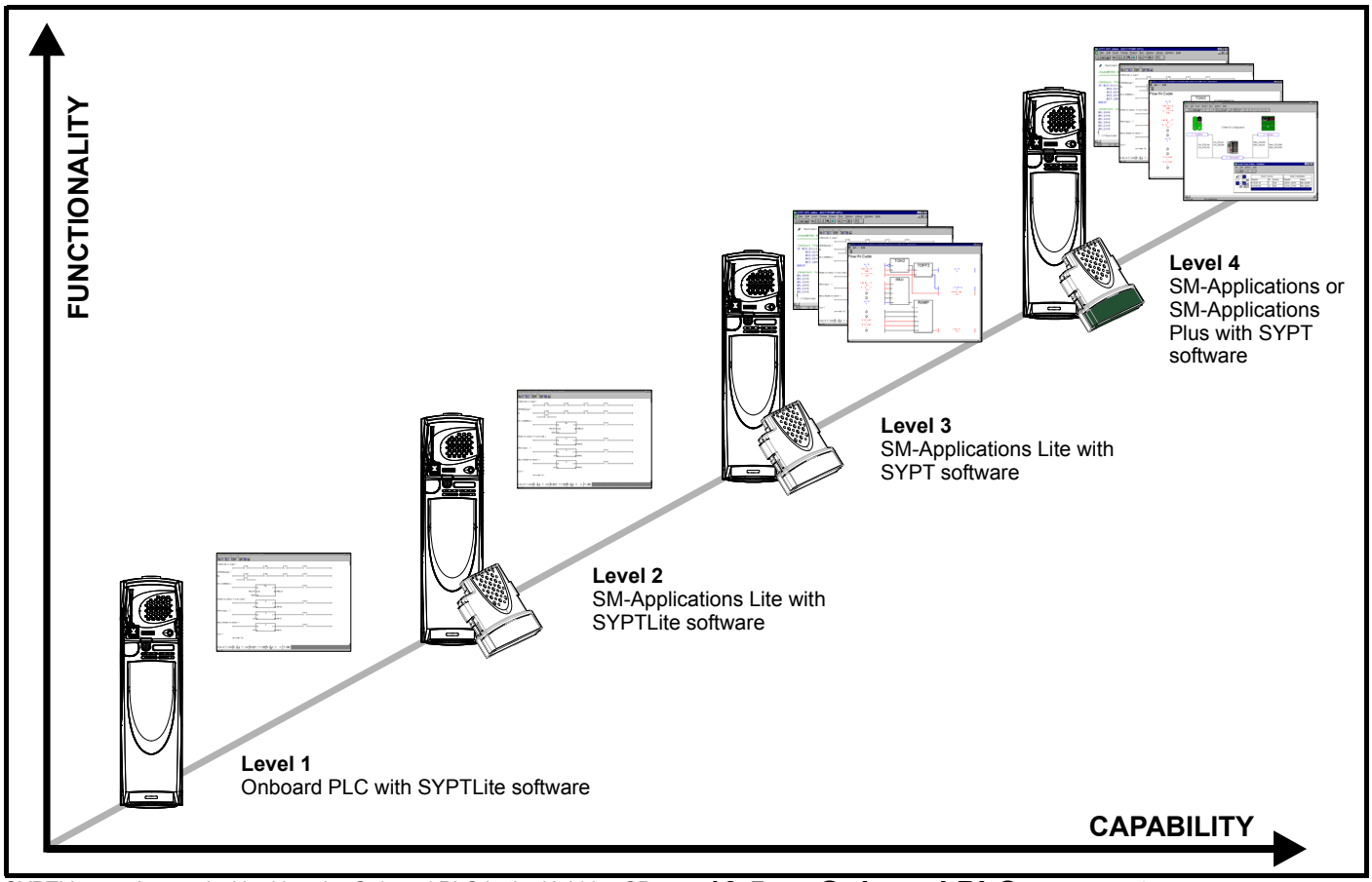

SYPTLite can be used with either the Onboard PLC in the Unidrive SP or with SM-Applications Lite to create ladder logic programs.

SYPT can be used with any of the Applications Modules to create fully flexible programs using ladder logic, function blocks or DPL script.

10.4 Getting started

SYPTLite can be found on the CD which is supplied with the drive.

SYPTLite system requirements

- Windows 2000/XP/Vista. **Windows 95/98/98SE/Me/NT4 are not supported**
- Pentium III 500MHz or better recommended
- 128MB RAM
- Minimum of 800x600 screen resolution. 1024x768 is recommended
- Adobe Acrobat 5.10 or later (for viewing User Guides)
- Microsoft Internet Explorer V5.0 or later
- RS232 to RS485, RJ45 communications lead to connect the PC to the drive
- Administrator rights are required to install the software

To install SYPTLite, insert the CD and the auto-run facility should start up the front-end screen, from which SYPTLite can be selected.

See the SYPTLite help file for more information regarding using SYPTLite, creating ladder diagrams and the available function blocks.

10.5 Onboard PLC parameters

The following parameters are associated with the Onboard PLC program.

11.47	Drive Onboard PLC program enable								
RW	Uni							US	
⇳	0 to 2				⇨	2			

This parameter is used to start and stop the drive Onboard PLC program.

Value	Description
0	Halt the drive Onboard PLC program.
1	Run the drive Onboard PLC program (if installed). Any out-of-range parameter writes attempted will be clipped to the maximum / minimum values valid for that parameter before being written.
2	Run the drive Onboard PLC program (if installed). Any out-of-range parameter writes attempted will cause a 'UP ovr' trip.

11.48	Drive Onboard PLC program status								
RO	Bi					NC	PT		
⇳	-128 to +127				⇨				

The drive Onboard PLC program status parameter indicates to the user the actual state of the drive Onboard PLC program.

Value	Description
-n	Onboard PLC program caused a drive trip due to an error condition while running rung n. Note that the rung number is shown on the display as a negative number.
0	Onboard PLC program is not installed.
1	Onboard PLC program is installed but stopped.
2	Onboard PLC program is installed and running.

When an Onboard PLC program is installed and running, the lower display of the drive flashes 'PLC' once every 10s.

11.49	Drive Onboard PLC programming events								
RO	Uni					NC	PT		PS
⇳	0 to 65,535				⇨				

The drive Onboard PLC programming events parameter holds the number of times an Onboard PLC program download has taken place and is 0 on dispatch from the factory. The drive is rated for one hundred ladder program downloads. This parameter is not altered when defaults are loaded.

11.50	Drive Onboard PLC program average scan time								
RO	Uni					NC	PT		
⇳	0 to 65,535 ms				⇨				

This parameter is updated once per second or once per Onboard PLC program scan whichever is the longest. If more than one program scan occurs within the one second update period the parameter shows the average scan time. If the program scan time is longer than one second the parameter shows the time for the last program scan.

11.51	Drive Onboard PLC program first run								
RO	Bit					NC	PT		
⇳	OFF (0) or On (1)				⇨				

The Drive Onboard PLC program first run parameter is set for the duration of program scan from the stopped state. This enables the user to perform any required initialization every time the program is run. This parameter is set every time the program is stopped.

10.6 Onboard PLC trips

The following trips are associated with the Onboard PLC program.

Trip	Diagnosis
UP ACC	**Onboard PLC program: Cannot access Onboard PLC program file on drive**
98	Disable drive - write access is not allowed when the drive is enabled. Another source is already accessing Onboard PLC program - retry once the other action is complete.
UP div0	**Onboard PLC program attempted divide by zero**
90	Check program
UP OFL	**Onboard PLC program variables and function block calls using more than the allowed RAM space (stack overflow)**
95	Check program
UP ovr	**Onboard PLC program attempted out of range parameter write**
94	Check program
UP PAr	**Onboard PLC program attempted access to a non-existent parameter**
91	Check program
UP ro	**Onboard PLC program attempted write to a read-only parameter**
92	Check program
UP So	**Onboard PLC program attempted read of a write-only parameter**
93	Check program
UP udF	**Onboard PLC program undefined trip**
97	Check program
UP uSEr	**Onboard PLC program requested a trip**
96	Check program

10.7 Onboard PLC and the SMARTCARD

The Onboard PLC program in a drive may be transferred from the drive to a SMARTCARD and vice versa.

- To transfer an Onboard PLC program from the drive to a SMARTCARD, set Pr **xx.00** to 5yyy and reset the drive
- To transfer an Onboard PLC program from the SMARTCARD to a drive, set Pr **xx.00** to 6yyy and reset the drive.

(Where yyy is the data block location, see Table 9-1 *SMARTCARD data blocks* on page 151 for restrictions on block numbers).

If an attempt is made to transfer an Onboard PLC program from a drive to the SMARTCARD when the drive contains no program, the block is still created on the SMARTCARD but it will contain no data. If this data block is then transferred to a drive, the destination drive will then have no Onboard PLC program.

The smallest SMARTCARD compatible with Unidrive SP has a capacity of 4064 bytes and each block can be up to 4064 bytes in size. The maximum size of a user program is 4032 bytes so it is guaranteed that any Onboard PLC program downloaded to a Unidrive SP will fit on to an empty SMARTCARD. A SMARTCARD can contain a number of Onboard PLC programs until the capacity of the card is used.

11 Advanced parameters

This is a quick reference to all parameters in the drive showing units, ranges limits etc, with block diagrams to illustrate their function. Full descriptions of the parameters can be found in the *Advanced User Guide* on the supplied CD ROM.

WARNING

These advanced parameters are listed for reference purposes only. The lists in this chapter do not include sufficient information for adjusting these parameters. Incorrect adjustment can affect the safety of the system, and damage the drive and or external equipment. Before attempting to adjust any of these parameters, refer to the *Advanced User Guide*.

Table 11-1 Menu descriptions

Menu number	Description
0	Commonly used basic set up parameters for quick / easy programming
1	Frequency / speed reference
2	Ramps
3	Frequency slaving, speed feedback and speed control
4	Torque and current control
5	Motor control
6	Sequencer and clock
7	Analog I/O
8	Digital I/O
9	Programmable logic, motorized pot and binary sum
10	Status and trips
11	General drive set-up
12	Threshold detectors and variable selectors
13	Position control
14	User PID controller
18	Application menu 1
19	Application menu 2
20	Application menu 3
21	Second motor parameters
22	Additional Menu 0 set-up

Operation mode abbreviations:

OL> Open loop
CL> Closed loop (which incorporates closed loop vector and servo mode)
VT> Closed loop vector mode
SV> Servo

Default abbreviations:

EUR> European default value (50Hz AC supply frequency)
USA> USA default value (60Hz AC supply frequency)

NOTE

Parameter numbers shown in brackets {...} are the equivalent Menu 0 parameters. Some Menu 0 parameters appear twice since their function depends on the operating mode.

The Range - CL column applies to both Closed-loop Vector and Closed-loop Servo. For some parameters, this column applies only to one of these modes; this is indicated accordingly in the Default columns.

In some cases, the function or range of a parameter is affected by the setting of another parameter; the information in the lists relates to the default condition of such parameters.

Table 11-2 Key to parameter table coding

Coding	Attribute
RW	Read/write: can be written by the user
RO	Read only: can only be read by the user
Bit	1 bit parameter. 'On' or 'OFF' on the display
Bi	Bipolar parameter
Uni	Unipolar parameter
Txt	Text: the parameter uses text strings instead of numbers.
FI	Filtered: some parameters which can have rapidly changing values are filtered when displayed on the drive keypad for easy viewing.
DE	Destination: This parameter selects the destination of an input or logic function.
RA	Rating dependent: this parameter is likely to have different values and ranges with drives of different voltage and current ratings. Parameters with this attribute will not be transferred to the destination drive by SMARTCARDs when the rating of the destination drive is different from the source drive and the file is a parameter file. However, with software V01.09.00 and later the value will be transferred if only the current rating is different and the file is a differences from default type file.
NC	Not copied: not transferred to or from SMARTCARDs during copying.
PT	Protected: cannot be used as a destination.
US	User save: parameter saved in drive EEPROM when the user initiates a parameter save.
PS	Power-down save: parameter automatically saved in drive EEPROM when the under volts (UV) trip occurs. With software version V01.08.00 and later, power-down save parameters are also saved in the drive when the user initiates a parameter save.

Table 11-3 Feature look-up table

Feature	Related parameters (Pr)												
Acceleration rates	2.10	2.11 to 2.19		2.32	2.33	2.34	2.02						
Analog speed reference 1	1.36	7.10	7.01	7.07	7.08	7.09	7.25	7.26	7.30				
Analog speed reference 2	1.37	7.14	1.41	7.02	7.11	7.12	7.13	7.28	7.31				
Analog I/O	Menu 7												
Analog input 1	7.01	7.07	7.08	7.09	7.10	7.25	7.26	7.30					
Analog input 2	7.02	7.11	7.12	7.13	7.14	7.28	7.31						
Analog input 3	7.03	7.15	7.16	7.17	7.18	7.29	7.32						
Analog output 1	7.19	7.20	7.21	7.33									
Analog output 2	7.22	7.23	7.24										
Application menu	Menu 18		Menu 19		Menu 20								
At speed indicator bit	3.06	3.07	3.09	10.06	10.05	10.07							
Auto reset	10.34	10.35	10.36	10.01									
Autotune	5.12	5.16	5.17	5.23	5.24	5.25	5.10	5.29	5.30				
Binary sum	9.29	9.30	9.31	9.32	9.33	9.34							
Bipolar speed	1.10												
Brake control	12.40 to 12.49												
Braking	10.11	10.10	10.30	10.31	6.01	2.04	2.02	10.12	10.39	10.40			
Catch a spinning motor	6.09	5.40											
Coast to stop	6.01												
Comms	11.23 to 11.26												
Copying	11.42	11.36 to 11.40											
Cost - per kWh electricity	6.16	6.17	6.24	6.25	6.26	6.40							
Current controller	4.13	4.14											
Current feedback	4.01	4.02	4.17	4.04	4.12	4.20	4.23	4.24	4.26	10.08	10.09	10.17	
Current limits	4.05	4.06	4.07	4.18	4.15	4.19	4.16	5.07	5.10	10.08	10.09	10.17	
DC bus voltage	5.05	2.08											
DC injection braking	6.06	6.07	6.01										
Deceleration rates	2.20	2.21 to 2.29		2.04	2.35 to 2.37		2.02	2.08	6.01	10.30	10.31	10.39	2.09
Defaults	11.43	11.46											
Digital I/O	Menu 8												
Digital I/O read word	8.20												
Digital I/O T24	8.01	8.11	8.21	8.31									
Digital I/O T25	8.02	8.12	8.22	8.32									
Digital I/O T26	8.03	8.13	8.23	8.33									
Digital input T27	8.04	8.14	8.24										
Digital input T28	8.05	8.15	8.25	8.39									
Digital input T29	8.06	8.16	8.26	8.39									
Digital lock	13.10	13.01 to 13.09		13.11	13.12	13.16	3.22	3.23	13.19 to 13.23				
Digital output T22	8.08	8.18	8.28										
Direction	10.13	6.30	6.31	1.03	10.14	2.01	3.02	8.03	8.04	10.40			
Display timeout	11.41												
Drive active	10.02	10.40											
Drive derivative	11.28												
Drive OK	10.01	8.27	8.07	8.17	10.36	10.40							
Dynamic performance	5.26												
Dynamic V/F	5.13												
Electronic nameplate	3.49												
Enable	6.15	8.09	8.10										
Encoder reference	3.43	3.44	3.45	3.46									
Encoder set up	3.33	3.34 to 3.42		3.47	3.48								
External trip	10.32	8.10	8.07										
Fan speed	6.45												
Fast disable	6.29												
Field weakening - induction motor	5.29	5.30	1.06	5.28									
Field weakening - servo	5.22	1.06	5.09										
Filter change	6.19	6.18											
Frequency reference selection	1.14	1.15											
Frequency slaving	3.01	3.13	3.14	3.15	3.16	3.17	3.18						
Hard speed reference	3.22	3.23											
Heavy duty rating	5.07	11.32											
High stability space vector modulation	5.19												
I/O sequencer	6.04	6.30	6.31	6.32	6.33	6.34	6.42	6.43	6.41				

Feature	Related parameters (Pr)												
Inertia compensation	2.38	5.12	4.22	3.18									
Jog reference	1.05	2.19	2.29										
Ke	5.33												
Keypad reference	1.17	1.14	1.43	1.51	6.12	6.13							
Kt	5.32												
Limit switches	6.35	6.36											
Line power supply loss	6.03	10.15	10.16	5.05									
Local position reference	13.20 to 13.23												
Logic function 1	9.01	9.04	9.05	9.06	9.07	9.08	9.09	9.10					
Logic function 2	9.02	9.14	9.15	9.16	9.17	9.18	9.19	9.20					
Low voltage supply	6.44	6.46											
Marker pulse	3.32	3.31											
Maximum speed	1.06												
Menu 0 set up	11.01 to 11.22		Menu 22										
Minimum speed	1.07	10.04											
Modules - number of	11.35												
Motor map	5.06	5.07	5.08	5.09	5.10	5.11							
Motor map 2	Menu 21		11.45										
Motorized potentiometer	9.21	9.22	9.23	9.24	9.25	9.26	9.27	9.28					
Offset speed reference	1.04	1.38	1.09										
Onboard PLC	11.47 to 11.51												
Open collector digital outputs	8.30												
Open loop vector mode	5.14	5.17	5.23										
Operating mode	0.48	11.31	3.24	5.14									
Orientation	13.10	13.13 to 13.15											
Output	5.01	5.02	5.03	5.04									
Overspeed threshold	3.08												
Phase angle	3.25	5.12											
PID controller	Menu 14												
Position feedback - drive	3.28	3.29	3.30	3.50									
Positive logic	8.29												
Power up parameter	11.22	11.21											
Precision reference	1.18	1.19	1.20	1.44									
Preset speeds	1.15	1.21 to 1.28		1.16	1.14	1.42	1.45 to 1.48		1.50				
Programmable logic	Menu 9												
Quasi square operation	5.20												
Ramp (accel / decel) mode	2.04	2.08	6.01	2.02	2.03	10.30	10.31	10.39					
Rated speed autotune	5.16	5.08											
Regenerating	10.10	10.11	10.30	10.31	6.01	2.04	2.02	10.12	10.39	10.40			
Relative jog	13.17 to 13.19												
Relay output	8.07	8.17	8.27										
Reset	10.33	8.02	8.22	10.34	10.35	10.36	10.01						
RFC mode (encoder less CLV mode)	3.24	3.42	4.12	5.40									
S ramp	2.06	2.07											
Sample rates	5.18												
SAFE TORQUE OFF input	8.09	8.10											
Security code	11.30	11.44											
Serial comms	11.23 to 11.26												
Skip speeds	1.29	1.30	1.31	1.32	1.33	1.34	1.35						
Slip compensation	5.27	5.08											
SMARTCARD	11.36 to 11.40		11.42										
Software version	11.29	11.34											
Speed controller	3.10 to 3.17		3.19	3.20	3.21								
Speed feedback	3.02	3.03	3.04										
Speed feedback - drive	3.26	3.27	3.28	3.29	3.30	3.31	3.42						
Speed reference selection	1.14	1.15	1.49	1.50	1.01								
Status word	10.40												
Supply	6.44	5.05	6.46										
Switching frequency	5.18	5.35	7.34	7.35									
Thermal protection - drive	5.18	5.35	7.04	7.05	7.06	7.32	7.35	10.18					
Thermal protection - motor	4.15	5.07	4.19	4.16	4.25	7.15							
Thermistor input	7.15	7.03											
Threshold detector 1	12.01	12.03 to 12.07											
Threshold detector 2	12.02	12.23 to 12.27											

Feature	Related parameters (Pr)												
Time - filter change	6.19	6.18											
Time - powered up log	6.20	6.21	6.28										
Time - run log	6.22	6.23	6.28										
Torque	4.03	4.26	5.32										
Torque mode	4.08	4.11	4.09	4.10									
Trip detection	10.37	10.38	10.20 to 10.29										
Trip log	10.20 to 10.29		10.41 to 10.51		6.28								
Under voltage	5.05	10.16	10.15										
V/F mode	5.15	5.14											
Variable selector 1	12.08 to 12.15												
Variable selector 2	12.28 to 12.35												
Velocity feed forward	1.39	1.40											
Voltage controller	5.31												
Voltage mode	5.14	5.17	5.23	5.15									
Voltage rating	11.33	5.09	5.05										
Voltage supply	6.44	6.46	5.05										
Warning	10.19	10.12	10.17	10.18	10.40								
Zero speed indicator bit	3.05	10.03											

Parameter ranges and variable maximums:

The two values provided define the minimum and maximum values for the given parameter. In some cases the parameter range is variable and dependant on either:

- other parameters
- the drive rating
- drive mode
- or a combination of these

The values given in Table 11-4 are the variable maximums used in the drive.

Table 11-4 Definition of parameter ranges & variable maximums

Maximum	Definition
SPEED_FREQ_MAX [Open-loop 3000.0Hz, Closed-loop vector and Servo 40000.0rpm]	**Maximum speed (closed-loop mode) reference or frequency (open-loop mode) reference** If Pr **1.08** = 0: SPEED_FREQ_MAX = Pr **1.06** If Pr **1.08** = 1: SPEED_FREQ_MAX is Pr **1.06** or – Pr **1.07** whichever is the largest (If the second motor map is selected Pr **21.01** is used instead of Pr **1.06** and Pr **21.02** instead of Pr **1.07**)
SPEED_LIMIT_MAX [40000.0rpm]	**Maximum applied to speed reference limits** A maximum limit may be applied to the speed reference to prevent the nominal encoder frequency from exceeding 500kHz (410kHz for software version V01.06.00 and earlier). The maximum is defined by SPEED_LIMIT_MAX (in rpm) = 500kHz x 60 / ELPR = 3.0 x 10^7 / ELPR subject to an absolute maximum of 40,000 rpm. ELPR is equivalent encoder lines per revolution and is the number of lines that would be produced by a quadrature encoder. Quadrature encoder ELPR = number of lines per revolution F and D encoder ELPR = number of lines per revolution / 2 Resolver ELPR = resolution / 4 SINCOS encoder ELPR = number of sine waves per revolution Serial comms encoder ELPR = resolution / 4 This maximum is defined by the device selected with the speed feedback selector (Pr **3.26**) and the ELPR set for the position feedback device. In closed-loop vector RFC mode SPEED_LIMIT_MAX = 40,000rpm.
SPEED_MAX [40000.0rpm]	**Maximum speed** This maximum is used for some speed related parameters in menu 3. To allow headroom for overshoot etc. the maximum speed is twice the maximum speed reference. SPEED_MAX = 2 x SPEED_FREQ_MAX
RATED_CURRENT_MAX [9999.99A]	**Maximum motor rated current (Maximum Normal Duty current rating)** RATED_CURRENT_MAX = 1.36 x K_C. The motor rated current can be increased above K_C up to a level not exceeding 1.36 x K_C). (Maximum motor rated current is the maximum normal duty current rating.) The actual level varies from one drive size to another, refer to Table 11-5.
DRIVE_CURRENT_MAX [9999.99A]	**Maximum drive current** The maximum drive current is the current at the over current trip level and is given by: DRIVE_CURRENT_MAX = K_C / 0.45
AC_VOLTAGE_SET_MAX [690V]	**Maximum output voltage set-point** Defines the maximum motor voltage that can be selected. 200V drives: 240V, 400V drives: 480V 575V drives: 575V, 690V drives: 690V
AC_VOLTAGE_MAX [930V]	**Maximum AC output voltage** This maximum has been chosen to allow for maximum AC voltage that can be produced by the drive including quasi-square wave operation as follows: AC_VOLTAGE_MAX = 0.78 x DC_VOLTAGE_MAX 200V drives: 325V, 400V drives: 650V, 575V drives: 780V, 690V drives: 930V
DC_VOLTAGE_SET_MAX [1150V]	**Maximum DC voltage set-point** 200V rating drive: 0 to 400V, 400V rating drive: 0 to 800V 575V rating drive: 0 to 955V, 690V rating drive: 0 to 1150V
DC_VOLTAGE_MAX [1190V]	**Maximum DC bus voltage** The maximum measurable DC bus voltage. 200V drives: 415V, 400V drives: 830V, 575V drives: 990V, 690V drives: 1190V

Maximum	Definition
MOTOR1_CURRENT_LIMIT_MAX [1000.0%]	**Maximum current limit settings for motor map 1** This maximum current limit setting is the maximum applied to the current limit parameters in motor map 1. **Open Loop** $\text{Maximum current limit} = \frac{\sqrt{\left[\left[\frac{\text{Maximum current}}{\text{Motor rated current}}\right]^2 + PF^2 - 1\right]}}{PF} \times 100\%$ Where: The Maximum current is either (1.5 x K_C) when the motor rated current set in Pr **5.07** is less than or equal to the maximum Heavy Duty current rating given by Pr **11.32**, otherwise it is (1.1 x Normal Duty rating). Motor rated current is given by Pr **5.07** PF is motor rated power factor given by Pr **5.10** **Closed Loop vector** $\text{Maximum current limit} = \frac{\sqrt{\left[\left[\frac{\text{Maximum current}}{\text{Motor rated current}}\right]^2 + \cos(\varphi_1)^2 - 1\right]}}{\cos(\varphi_1)} \times 100\%$ Where: The Maximum current is either (1.75 x K_C) when the motor rated current set in Pr **5.07** is less than or equal to the maximum Heavy Duty current rating given by Pr **11.32**, otherwise it is (1.1 x Normal Duty rating). Motor rated current is given by Pr **5.07** φ_1 = cos-1(PF) - φ_2. This is measured by the drive during an autotune. See Menu 4 in the *Advanced User Guide* for more information regarding φ2. PF is motor rated power factor given by Pr **5.10** **Servo** $\text{Maximum current limit} = \left[\frac{\text{Maximum current}}{\text{Motor rated current}}\right] \times 100\%$ Where: The Maximum current is either (1.75 x K_C) when the motor rated current set in Pr **5.07** is less than or equal to the maximum Heavy Duty current rating given by Pr **11.32**, otherwise it is (1.1 x Normal Duty rating). Motor rated current is given by Pr **5.07**
MOTOR2_CURRENT_LIMIT_MAX [1000.0%]	**Maximum current limit settings for motor map 2** This maximum current limit setting is the maximum applied to the current limit parameters in motor map 2. The formulae for MOTOR2_CURRENT_LIMIT_MAX are the same for MOTOR1_CURRENT_LIMIT_MAX except that Pr **5.07** is replaced with Pr **21.07** and Pr **5.10** is replaced with Pr **21.10**.
TORQUE_PROD_CURRENT_MAX [1000.0%]	**Maximum torque producing current** This is used as a maximum for torque and torque producing current parameters. It is MOTOR1_CURRENT_LIMIT_MAX or MOTOR2_CURRENT_LIMIT_MAX depending on which motor map is currently active.
USER_CURRENT_MAX [1000.0%]	**Current parameter limit selected by the user** The user can select a maximum for Pr **4.08** (torque reference) and Pr **4.20** (percentage load) to give suitable scaling for analog I/O with Pr **4.24**. This maximum is subject to a limit of MOTOR1_CURRENT_LIMIT_MAX. or MOTOR2_CURRENT_LIMIT_MAX depending on which motor map is currently active. USER_CURRENT_MAX = Pr **4.24**
POWER_MAX [9999.99kW]	**Maximum power in kW** The maximum power has been chosen to allow for the maximum power that can be output by the drive with maximum AC output voltage, maximum controlled current and unity power factor. Therefore: Software V01.07.01 and earlier: POWER_MAX = $\sqrt{3}$ x AC_VOLTAGE_MAX x RATED_CURRENT x 1.75/1000 Software V01.08.00 and later: POWER_MAX = $\sqrt{3}$ x AC_VOLTAGE_MAX x DRIVE_CURRENT_MAX/1000

The values given in square brackets indicate the absolute maximum value allowed for the variable maximum.

Table 11-5 Maximum motor rated current

Model	K_C	Maximum Heavy Duty current rating (Pr 11.32) A	Maximum Normal Duty current rating A
SP0201	2.2	2.2	2.2
SP0202	3.1	3.1	3.1
SP0203	4.0	4.0	4.0
SP0204	5.7	5.7	5.7
SP0205	7.5	7.5	7.5
SP1201	4.3	4.3	5.2
SP1202	5.8	5.8	6.8
SP1203	7.5	7.5	9.6
SP1204	10.6	10.6	11
SP2201	12.6	12.6	15.5
SP2202	17.0	17.0	22.0
SP2203	25.0	25.0	28.0
SP3201	31.0	31.0	42.0
SP3202	42.0	42.0	54.0
SP4201	56.0	56.0	68.0
SP4202	68.0	68.0	80.0
SP4203	80.0	80.0	104.0
SP5201	105.0	105.0	130.0
SP5202	130.0	130.0	154.0
SP0401	1.3	1.3	1.3
SP0402	1.7	1.7	1.7
SP0403	2.1	2.1	2.1
SP0404	3.0	3.0	3.0
SP0405	4.2	4.2	4.2
SP1401	2.1	2.1	2.8
SP1402	3.0	3.0	3.8
SP1403	4.2	4.2	5.0
SP1404	5.8	5.8	6.9
SP1405	7.6	7.6	8.8
SP1406	9.5	9.5	11.0
SP2401	13.0	13.0	15.3
SP2402	16.5	16.5	21.0
SP2403	23.0	25.0	29.0
SP2404	29.0	29.0	29.0
SP3401	32.0	32.0	35.0
SP3402	40.0	40.0	43.0
SP3403	46.0	46.0	56.0
SP4401	60.0	60.0	68.0
SP4402	74.0	74.0	83.0
SP4403	96.0	96.0	104.0
SP5401	124.0	124.0	138.0
SP5402	156.0	156.0	168.0
SP6401	154.2	180.0	205.0
SP6402	180.0	210.0	236.0
SP3501	4.1	4.1	5.4
SP3502	5.4	5.4	6.1
SP3503	6.1	6.1	8.4
SP3504	9.5	9.5	11.0
SP3505	12.0	12.0	16.0
SP3506	18.0	18.0	22.0
SP3507	22.0	22.0	27.0
SP4601	19.0	19.0	22.0
SP4602	22.0	22.0	27.0
SP4603	27.0	27.0	36.0
SP4604	36.0	36.0	43.0
SP4605	43.0	43.0	52.0
SP4606	52.0	52.0	62.0
SP5601	63.0	63.0	84.0
SP5602	85.0	85.0	99.0
SP6601	85.7	100.0	125.0
SP6602	107.1	125.0	144.0

11.1 Menu 1: Frequency / speed reference

Figure 11-1 Menu 1 logic diagram

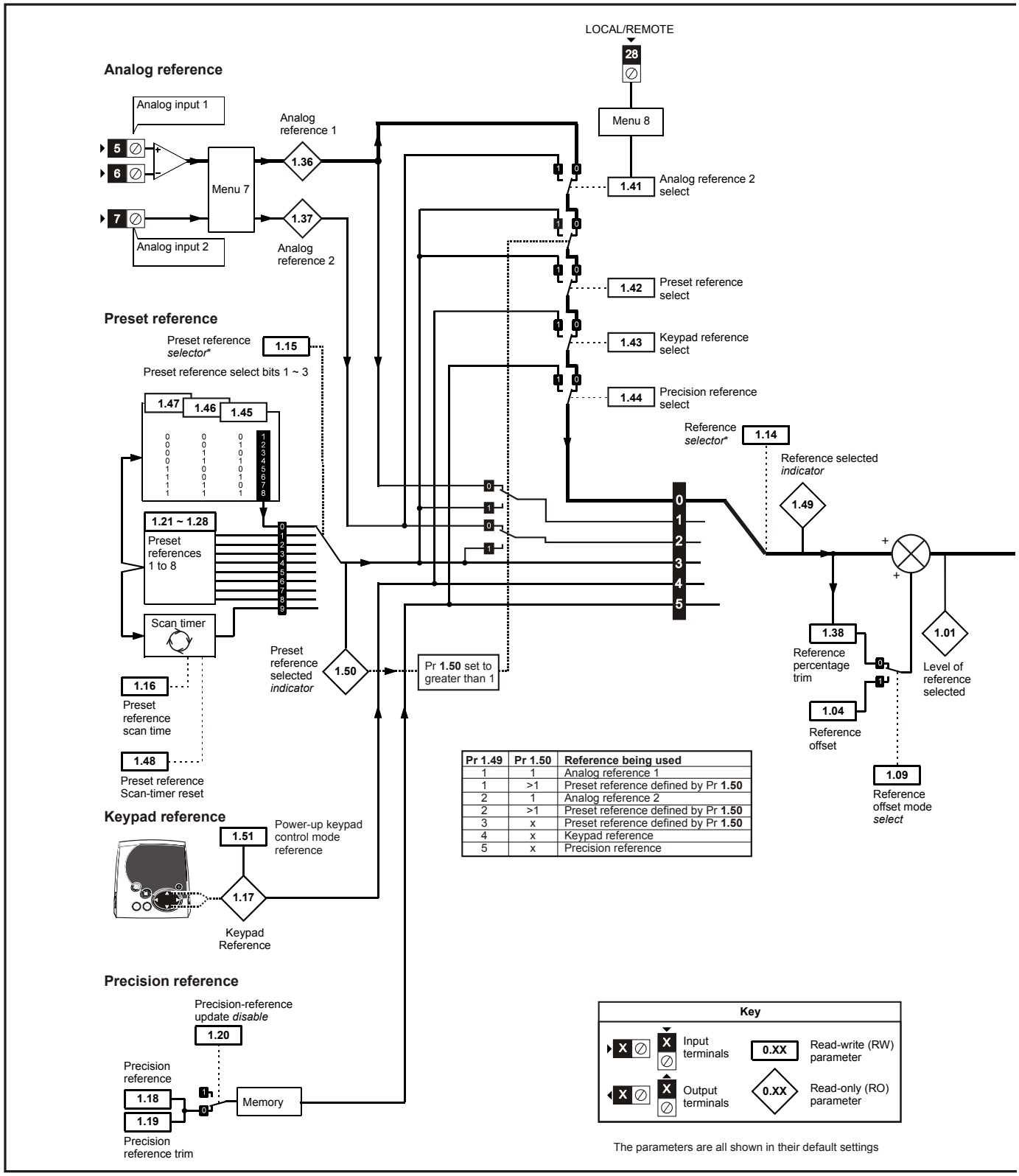

Pr 1.49	Pr 1.50	Reference being used
1	1	Analog reference 1
1	>1	Preset reference defined by Pr **1.50**
2	1	Analog reference 2
2	>1	Preset reference defined by Pr **1.50**
3	x	Preset reference defined by Pr **1.50**
4	x	Keypad reference
5	x	Precision reference

*For more information, refer to section 11.21.1 *Reference modes* on page 256

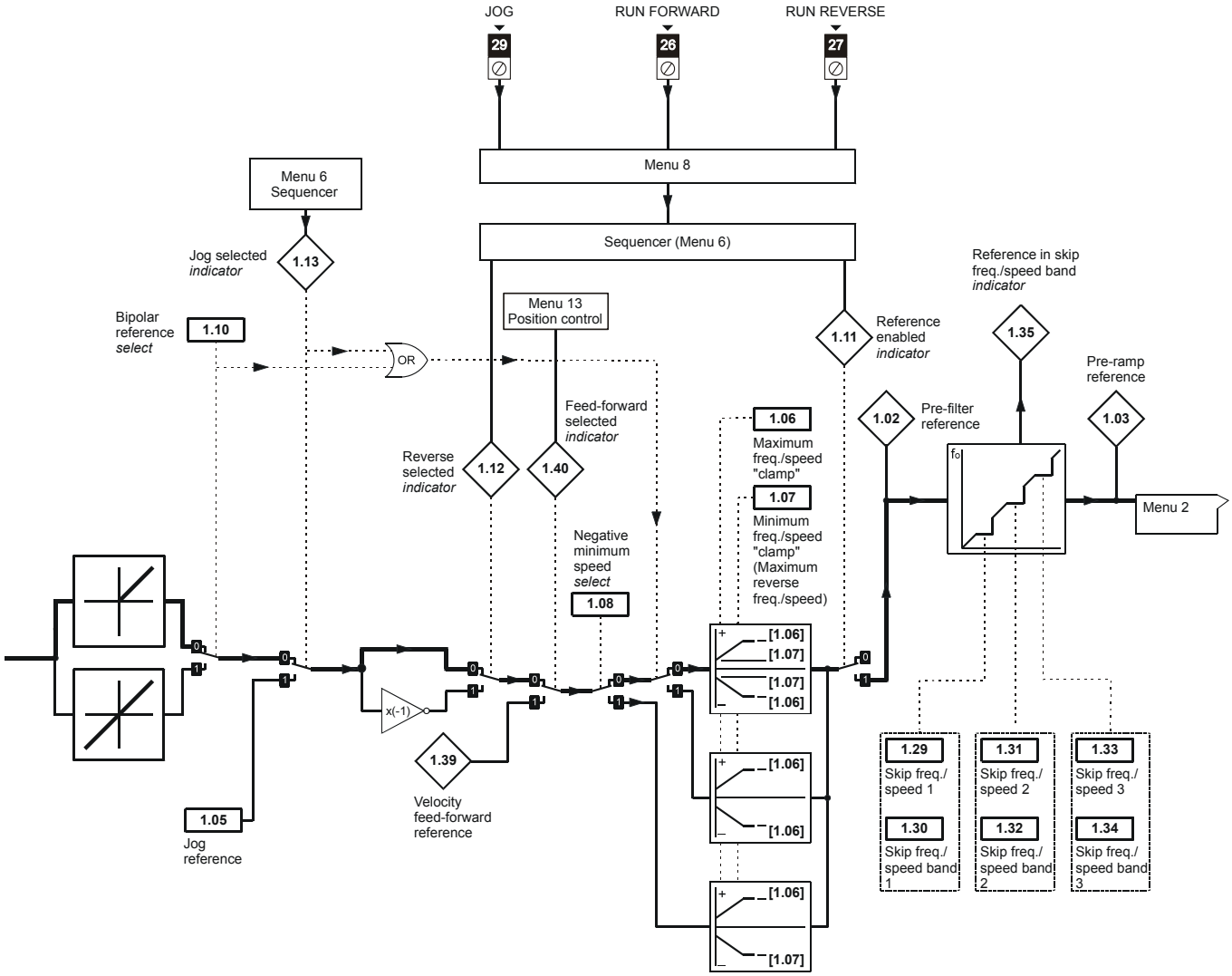
JOG
RUN FORWARD
RUN REVERSE
29
26
27
Menu 8
Sequencer (Menu 6)
Menu 6 Sequencer
Jog selected indicator
1.13
Bipolar reference select
1.10
OR
Menu 13 Position control
Feed-forward selected indicator
Reverse selected indicator
1.12
1.40
1.11
Reference enabled indicator
Reference in skip freq./speed band indicator
1.35
Pre-ramp reference
1.03
1.02
Pre-filter reference
fo
Menu 2
1.06
Maximum freq./speed "clamp"
1.07
Minimum freq./speed "clamp" (Maximum reverse freq./speed)
Negative minimum speed select
1.08
[1.06]
[1.07]
[1.07]
[1.06]
[1.06]
[1.06]
[1.06]
[1.07]
x(-1)
1.39
Velocity feed-forward reference
1.05
Jog reference
1.29
Skip freq./ speed 1
1.30
Skip freq./ speed band 1
1.31
Skip freq./ speed 2
1.32
Skip freq./ speed band 2
1.33
Skip freq./ speed 3
1.34
Skip freq./ speed band 3

Parameter			Range(⇳)		Default(⇨)			Type					
			OL	CL	OL	VT	SV						
1.01	Frequency / speed reference selected		±SPEED_FREQ_MAX Hz/rpm					RO	Bi		NC	PT	
1.02	Pre-skip filter reference		±SPEED_FREQ_MAX Hz/rpm					RO	Bi		NC	PT	
1.03	Pre-ramp reference		±SPEED_FREQ_MAX Hz/rpm					RO	Bi		NC	PT	
1.04	Reference offset		±3,000.0Hz	±40,000.0 rpm	0.0			RW	Bi				US
1.05	Jog reference	{**0.23**}	0 to 400.0 Hz	0 to 4,000.0 rpm	0.0			RW	Uni				US
1.06	Maximum reference clamp	{**0.02**}	0 to 3,000.0 Hz	SPEED_LIMIT_MAX rpm	EUR> 50.0 USA> 60.0	EUR> 1,500.0 USA> 1,800.0	3,000.0	RW	Uni				US
1.07	Minimum reference clamp	{**0.01**}	±3,000.0 Hz	±SPEED_LIMIT_MAX rpm	0.0			RW	Bi			PT	US
1.08	Negative minimum reference clamp enable		OFF (0) or On (1)		OFF (0)			RW	Bit				US
1.09	Reference offset select		OFF (0) or On (1)		OFF (0)			RW	Bit				US
1.10	Bipolar reference enable	{**0.22**}	OFF (0) or On (1)		OFF (0)			RW	Bit				US
1.11	Reference enabled indicator		OFF (0) or On (1)					RO	Bit		NC	PT	
1.12	Reverse selected indicator		OFF (0) or On (1)					RO	Bit		NC	PT	
1.13	Jog selected indicator		OFF (0) or On (1)					RO	Bit		NC	PT	
1.14	Reference selector	{**0.05**}	A1.A2 (0), A1.Pr (1), A2.Pr (2), Pr (3), PAd (4), Prc (5)		A1.A2 (0)			RW	Txt				US
1.15	Preset reference selector		0 to 9		0			RW	Uni				US
1.16	Preset reference selector timer		0 to 400.0s		10.0			RW	Uni				US
1.17	Keypad control mode reference		±SPEED_FREQ_MAX Hz/rpm		0.0			RO	Bi		NC	PT	PS
1.18	Precision reference coarse		±SPEED_FREQ_MAX Hz/rpm		0.0			RW	Bi				US
1.19	Precision reference fine		0.000 to 0.099 Hz	0.000 to 0.099 rpm	0.000			RW	Uni				US
1.20	Precision reference update disable		OFF (0) or On (1)		OFF (0)			RW	Bit		NC		
1.21	Preset reference 1	{**0.24**}	±SPEED_FREQ_MAX Hz/rpm		0.0			RW	Bi				US
1.22	Preset reference 2	{**0.25**}	±SPEED_FREQ_MAX Hz/rpm		0.0			RW	Bi				US
1.23	Preset reference 3	{**0.26**}	±SPEED_FREQ_MAX Hz/rpm		0.0			RW	Bi				US
1.24	Preset reference 4	{**0.27**}	±SPEED_FREQ_MAX Hz/rpm		0.0			RW	Bi				US
1.25	Preset reference 5		±SPEED_FREQ_MAX Hz/rpm		0.0			RW	Bi				US
1.26	Preset reference 6		±SPEED_FREQ_MAX Hz/rpm		0.0			RW	Bi				US
1.27	Preset reference 7		±SPEED_FREQ_MAX Hz/rpm		0.0			RW	Bi				US
1.28	Preset reference 8		±SPEED_FREQ_MAX Hz/rpm		0.0			RW	Bi				US
1.29	Skip reference 1		0.0 to 3,000.0 Hz	0 to 40,000 rpm	0.0	0		RW	Uni				US
1.30	Skip reference band 1		0.0 to 25.0 Hz	0 to 250 rpm	0.5	5		RW	Uni				US
1.31	Skip reference 2		0.0 to 3,000.0 Hz	0 to 40,000 rpm	0.0	0		RW	Uni				US
1.32	Skip reference band 2		0.0 to 25.0 Hz	0 to 250 rpm	0.5	5		RW	Uni				US
1.33	Skip reference 3		0.0 to 3,000.0 Hz	0 to 40,000 rpm	0.0	0		RW	Uni				US
1.34	Skip reference band 3		0.0 to 25.0Hz	0 to 250 rpm	0.5	5		RW	Uni				US
1.35	Reference in rejection zone		OFF (0) or On (1)					RO	Bit		NC	PT	
1.36	Analog reference 1		±SPEED_FREQ_MAX Hz/rpm					RO	Bi		NC		
1.37	Analog reference 2		±SPEED_FREQ_MAX Hz/rpm					RO	Bi		NC		
1.38	Percentage trim		±100.00%		0.00			RW	Bi		NC		
1.39	Velocity feed-forward		±3,000.0 Hz	±40,000.0 rpm				RO	Bi		NC	PT	
1.40	Velocity feed-forward select		OFF (0) or On (1)					RO	Bit		NC	PT	
1.41	Analog reference 2 select		OFF (0) or On (1)		OFF (0)			RW	Bit		NC		
1.42	Preset reference select		OFF (0) or On (1)		OFF (0)			RW	Bit		NC		
1.43	Keypad reference select		OFF (0) or On (1)		OFF (0)			RW	Bit		NC		
1.44	Precision reference select		OFF (0) or On (1)		OFF (0)			RW	Bit		NC		
1.45	Preset reference 1 select		OFF (0) or On (1)		OFF (0)			RW	Bit		NC		
1.46	Preset reference 2 select		OFF (0) or On (1)		OFF (0)			RW	Bit		NC		
1.47	Preset reference 3 select		OFF (0) or On (1)		OFF (0)			RW	Bit		NC		
1.48	Reference timer reset flag		OFF (0) or On (1)		OFF (0)			RW	Bit		NC		
1.49	Reference selected indicator		1 to 5					RO	Uni		NC	PT	
1.50	Preset reference selected indicator		1 to 8					RO	Uni		NC	PT	
1.51	Power-up keyboard control mode reference		rESEt (0), LASt (1), PrS1 (2)		rESEt (0)			RW	Txt				US

RW	Read / Write	RO	Read only	Uni	Unipolar	Bi	Bi-polar	Bit	Bit parameter	Txt	Text string		
FI	Filtered	DE	Destination	NC	Not copied	RA	Rating dependent	PT	Protected	US	User save	PS	Power down save

11.2 Menu 2: Ramps

Figure 11-2 Menu 2 logic diagram

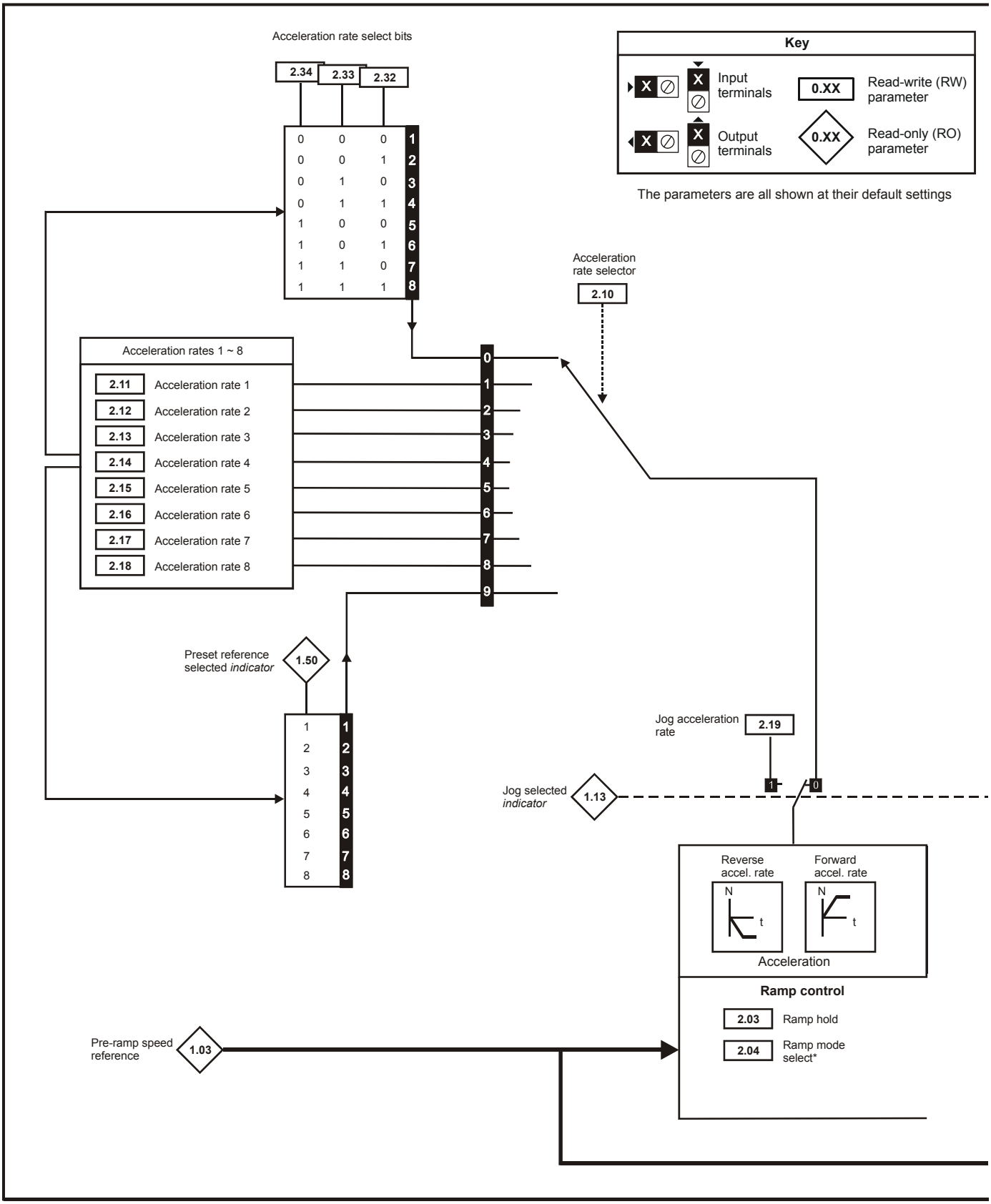

*For more information, refer to section 11.21.2 *Braking Modes* on page 257.

**For more information, refer to section 11.21.3 *S ramps* on page 257.

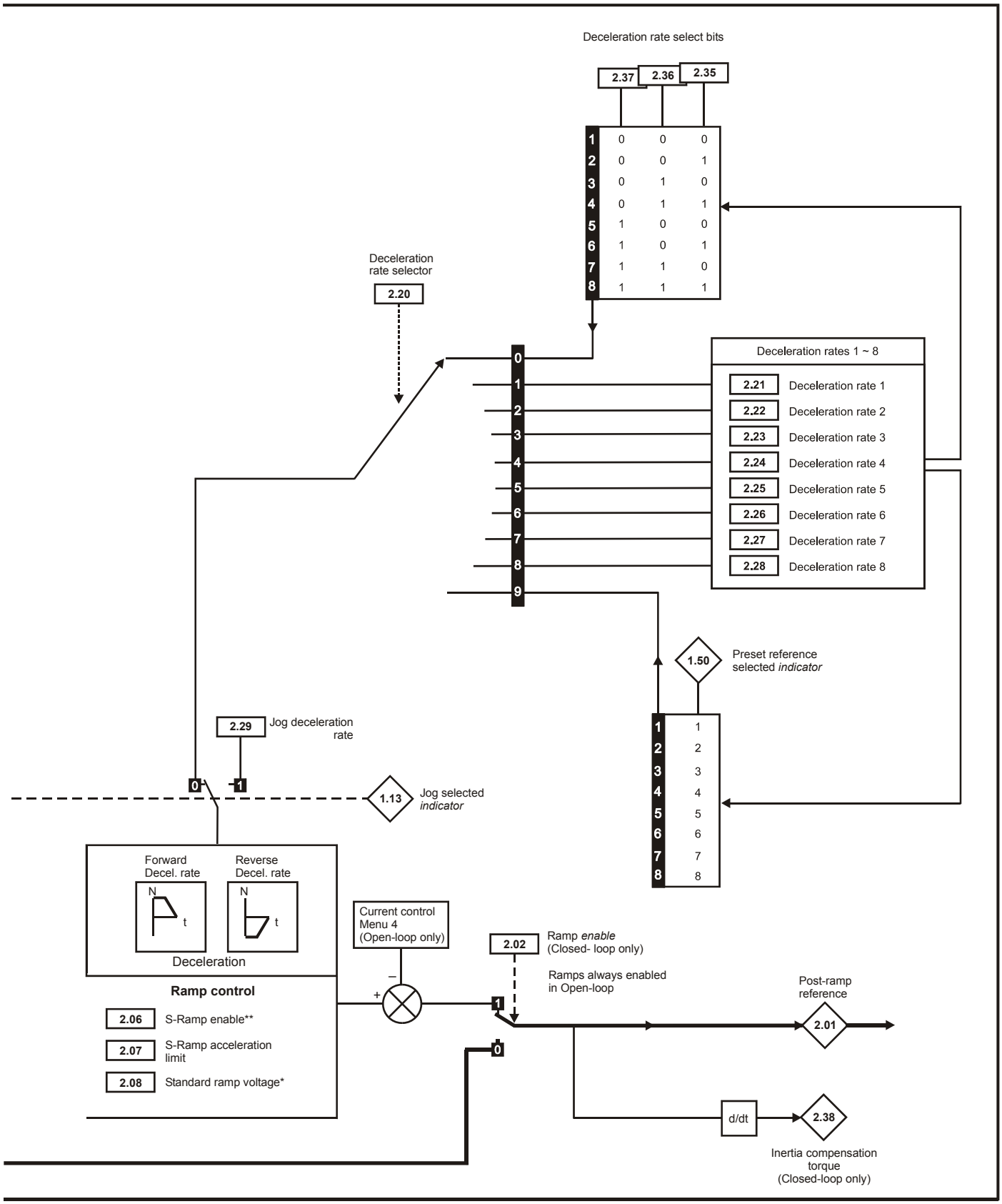
Deceleration rate select bits
2.37
2.36
2.35
1 0 0 0
2 0 0 1
3 0 1 0
4 0 1 1
5 1 0 0
6 1 0 1
7 1 1 0
8 1 1 1
Deceleration rate selector
2.20
0 1 2 3 4 5 6 7 8 9
Deceleration rates 1 ~ 8
2.21 Deceleration rate 1
2.22 Deceleration rate 2
2.23 Deceleration rate 3
2.24 Deceleration rate 4
2.25 Deceleration rate 5
2.26 Deceleration rate 6
2.27 Deceleration rate 7
2.28 Deceleration rate 8
1.50
Preset reference selected indicator
1 1
2 2
3 3
4 4
5 5
6 6
7 7
8 8
2.29
Jog deceleration rate
0
1
1.13
Jog selected indicator
Forward Decel. rate
Reverse Decel. rate
N
t
Deceleration
Ramp control
2.06 S-Ramp enable**
2.07 S-Ramp acceleration limit
2.08 Standard ramp voltage*
Current control Menu 4 (Open-loop only)
2.02
Ramp enable (Closed- loop only)
Ramps always enabled in Open-loop
Post-ramp reference
2.01
d/dt
2.38
Inertia compensation torque (Closed-loop only)

Parameter			Range(⇳)		Default(⇨)			Type					
			OL	CL	OL	VT	SV						
2.01	Post ramp reference		±SPEED_FREQ_MAX Hz/rpm					RO	Bi		NC	PT	
2.02	Ramp enable	{**0.16**}		OFF (0) or On (1)		On (1)		RW	Bit				US
2.03	Ramp hold		OFF (0) or On (1)		OFF (0)			RW	Bit				US
2.04	Ramp mode select	{**0.15**}	FASt (0) Std (1) Std.hV (2)	FASt (0) Std (1)	Std (1)			RW	Txt				US
2.06	S ramp enable		OFF (0) or On (1)		OFF (0)			RW	Bit				US
2.07	S ramp acceleration limit		0.0 to 300.0 s^2/100Hz	0.000 to 100.000 s^2/1000rpm	3.1	1.500	0.030	RW	Uni				US
2.08	Standard ramp voltage		0 to DC_VOLTAGE_SET_MAX V		200V drive: 375 400V drive: EUR> 750 USA> 775 575V drive: 895 690V drive: 1075			RW	Uni		RA		US
2.09	Deceleration failure detection		OFF (0) or On (1)		OFF (0)			RW	Bit				US
2.10	Acceleration rate selector		0 to 9		0			RW	Uni				US
2.11	Acceleration rate 1	{**0.03**}	0.0 to 3,200.0 s/100Hz	0.000 to 3,200.000 s/1,000rpm	5.0	2.000	0.200	RW	Uni				US
2.12	Acceleration rate 2		0.0 to 3,200.0 s/100Hz	0.000 to 3,200.000 s/1,000rpm	5.0	2.000	0.200	RW	Uni				US
2.13	Acceleration rate 3		0.0 to 3,200.0 s/100Hz	0.000 to 3,200.000 s/1,000rpm	5.0	2.000	0.200	RW	Uni				US
2.14	Acceleration rate 4		0.0 to 3,200.0 s/100Hz	0.000 to 3,200.000 s/1,000rpm	5.0	2.000	0.200	RW	Uni				US
2.15	Acceleration rate 5		0.0 to 3,200.0 s/100Hz	0.000 to 3,200.000 s/1,000rpm	5.0	2.000	0.200	RW	Uni				US
2.16	Acceleration rate 6		0.0 to 3,200.0 s/100Hz	0.000 to 3,200.000 s/1,000rpm	5.0	2.000	0.200	RW	Uni				US
2.17	Acceleration rate 7		0.0 to 3,200.0 s/100Hz	0.000 to 3,200.000 s/1,000rpm	5.0	2.000	0.200	RW	Uni				US
2.18	Acceleration rate 8		0.0 to 3,200.0 s/100Hz	0.000 to 3,200.000 s/1,000rpm	5.0	2.000	0.200	RW	Uni				US
2.19	Jog acceleration rate		0.0 to 3,200.0 s/100Hz	0.000 to 3,200.000 s/1,000rpm	0.2	0.000		RW	Uni				US
2.20	Deceleration rate selector		0 to 9		0			RW	Uni				US
2.21	Deceleration rate 1	{**0.04**}	0.0 to 3,200.0 s/100Hz	0.000 to 3,200.000 s/1,000rpm	10.0	2.000	0.200	RW	Uni				US
2.22	Deceleration rate 2		0.0 to 3,200.0 s/100Hz	0.000 to 3,200.000 s/1,000rpm	10.0	2.000	0.200	RW	Uni				US
2.23	Deceleration rate 3		0.0 to 3,200.0 s/100Hz	0.000 to 3,200.000 s/1,000rpm	10.0	2.000	0.200	RW	Uni				US
2.24	Deceleration rate 4		0.0 to 3,200.0 s/100Hz	0.000 to 3,200.000 s/1,000rpm	10.0	2.000	0.200	RW	Uni				US
2.25	Deceleration rate 5		0.0 to 3,200.0 s/100Hz	0.000 to 3,200.000 s/1,000rpm	10.0	2.000	0.200	RW	Uni				US
2.26	Deceleration rate 6		0.0 to 3,200.0 s/100Hz	0.000 to 3,200.000 s/1,000rpm	10.0	2.000	0.200	RW	Uni				US
2.27	Deceleration rate 7		0.0 to 3,200.0 s/100Hz	0.000 to 3,200.000 s/1,000rpm	10.0	2.000	0.200	RW	Uni				US
2.28	Deceleration rate 8		0.0 to 3,200.0 s/100Hz	0.000 to 3,200.000 s/1,000rpm	10.0	2.000	0.200	RW	Uni				US
2.29	Jog deceleration rate		0.0 to 3,200.0 s/100Hz	0.000 to 3,200.000 s/1,000rpm	0.2	0.000		RW	Uni				US
2.32	Acceleration select bit 0		OFF (0) or On (1)		OFF (0)			RW	Bit		NC		
2.33	Acceleration select bit 1		OFF (0) or On (1)		OFF (0)			RW	Bit		NC		
2.34	Acceleration select bit 2		OFF (0) or On (1)		OFF (0)			RW	Bit		NC		
2.35	Deceleration select bit 0		OFF (0) or On (1)		OFF (0)			RW	Bit		NC		
2.36	Deceleration select bit 1		OFF (0) or On (1)		OFF (0)			RW	Bit		NC		
2.37	Deceleration select bit 2		OFF (0) or On (1)		OFF (0)			RW	Bit		NC		
2.38	Inertia compensation torque			± 1,000.0 %				RO	Bi		NC	PT	

RW	Read / Write	RO	Read only	Uni	Unipolar	Bi	Bi-polar	Bit	Bit parameter	Txt	Text string		
FI	Filtered	DE	Destination	NC	Not copied	RA	Rating dependent	PT	Protected	US	User save	PS	Power down save

11.3 Menu 3: Frequency slaving, speed feedback and speed control

Figure 11-3 Menu 3 Open-loop logic diagram

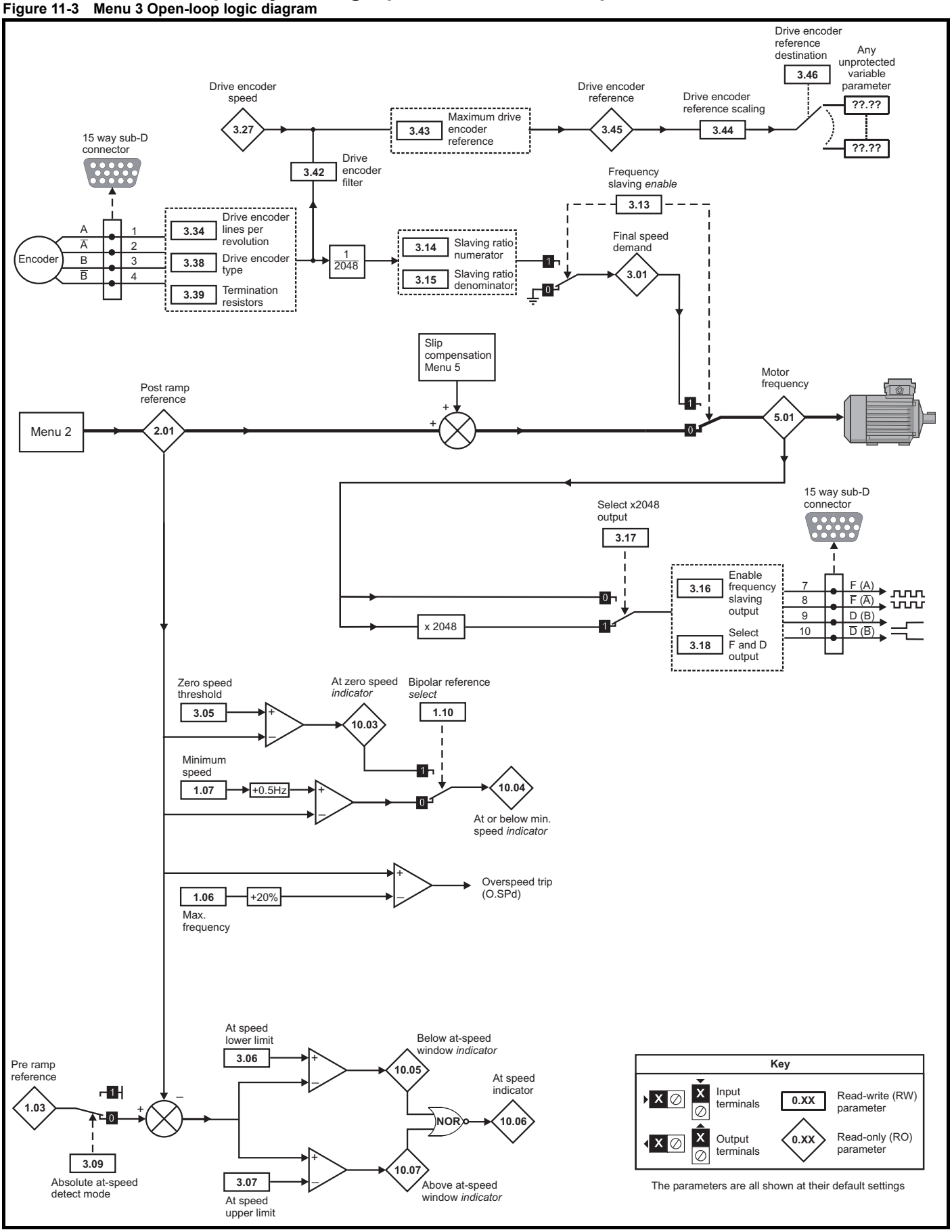

Figure 11-4 Menu 3 Closed loop logic diagram

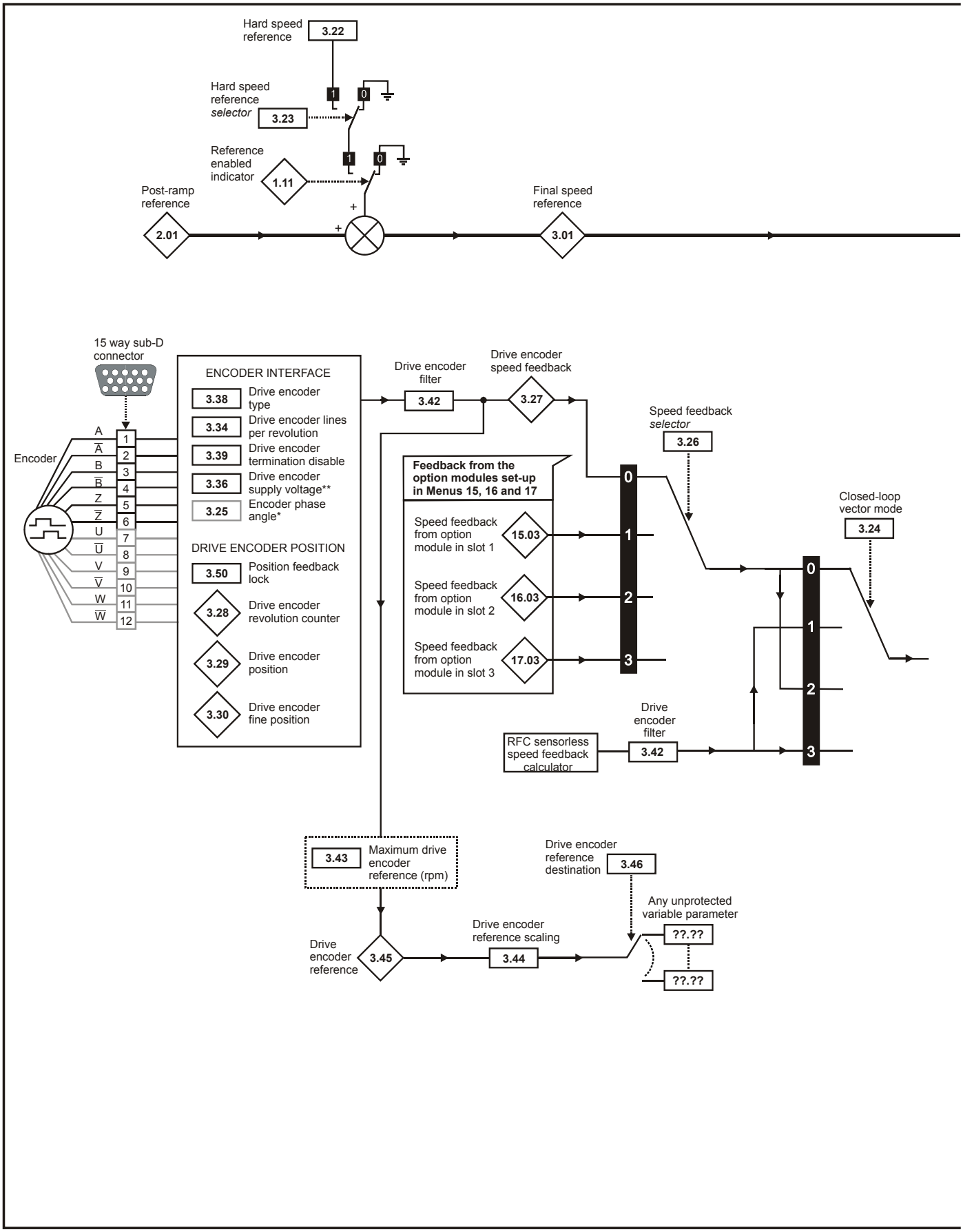

If output voltage from the encoder is >5V, then the termination resistors must be disabled Pr **3.39 to 0.**If output voltage from the encoder is >5V, then the termination resistors must be disabled Pr **3.39** to 0

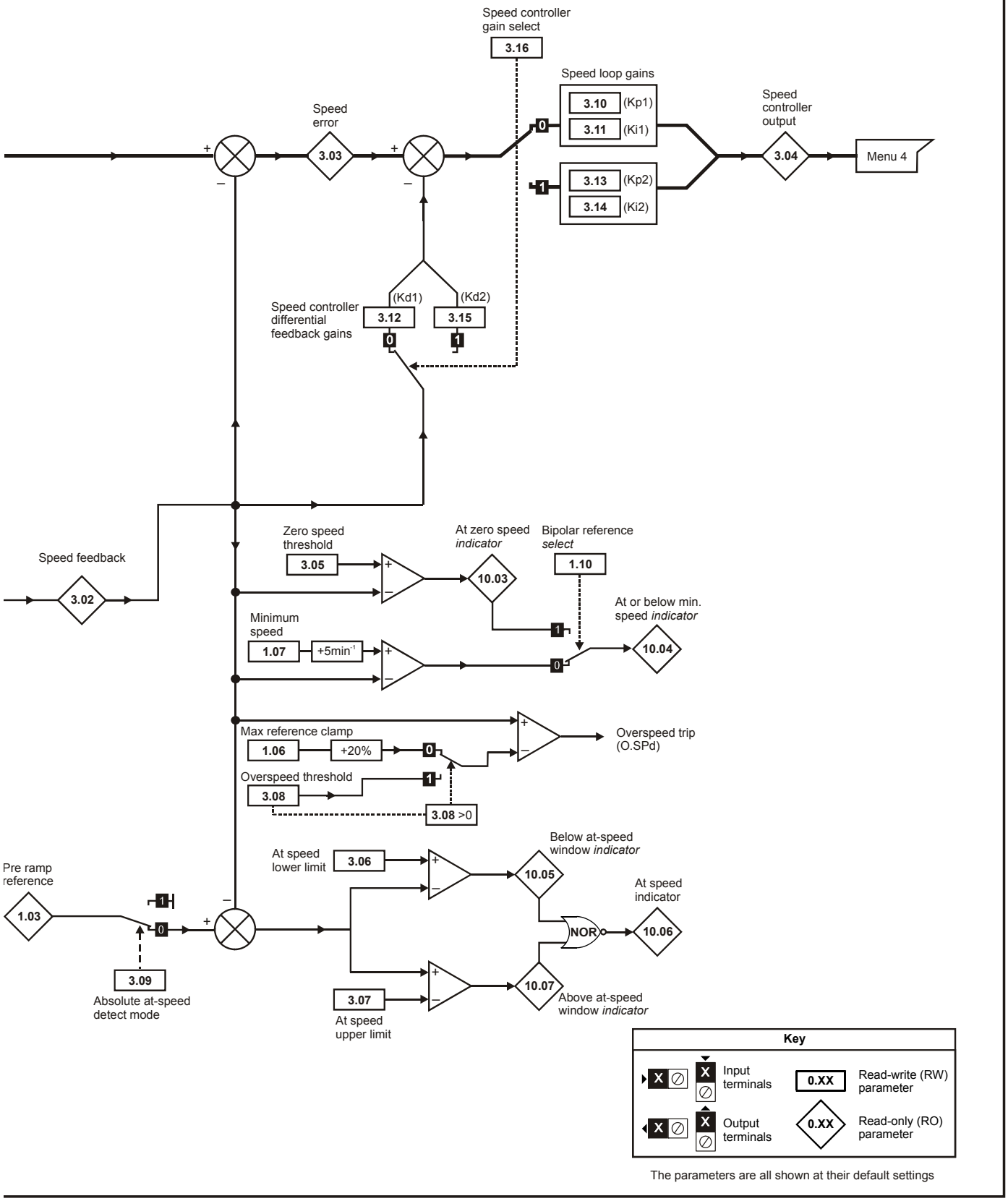

The parameters are all shown at their default settings

Parameter			Range(⇳)		Default(⇨)			Type					
			OL	CL	OL	VT	SV						
3.01	OL> Frequency slaving demand		±1,000.0 Hz					RO	Bi	FI	NC	PT	
	CL> Final speed reference			±SPEED_MAX rpm				RO	Bi	FI	NC	PT	
3.02	Speed feedback	{**0.10**}		±SPEED_MAX rpm				RO	Bi	FI	NC	PT	
3.03	Speed error			±SPEED_MAX rpm				RO	Bi	FI	NC	PT	
3.04	Speed controller output			±Torque_prod_ current_max %				RO	Bi	FI	NC	PT	
3.05	Zero speed threshold		0.0 to 20.0 Hz	0 to 200 rpm	1.0	5		RW	Uni				US
3.06	At speed lower limit		0.0 to 3,000.0 Hz	0 to 40,000 rpm	1.0	5		RW	Uni				US
3.07	At speed upper limit		0.0 to 3,000.0 Hz	0 to 40,000 rpm	1.0	5		RW	Uni				US
3.08	Overspeed threshold	{**0.26**}		0 to 40,000 rpm		0		RW	Uni				US
3.09	Absolute 'at speed' detect		OFF (0) or On (1)		OFF (0)			RW	Bit				US
3.10	Speed controller proportional gain (Kp1)	{**0.07**}		0.0000 to 6.5535 1/rad s^{-1}		0.0300	0.0100	RW	Uni				US
3.11	Speed controller integral gain (Ki1)	{**0.08**}		0.00 to 655.35 s/rad s^{-1}		0.10	1.00	RW	Uni				US
3.12	Speed controller differential feedback gain (Kd1)	{**0.09**}		0.00000 to 0.65535 s^{-1}/rad s^{-1}		0.00000		RW	Uni				US
3.13	OL> Enable frequency slaving		OFF (0) or On (1)		OFF (0)			RW	Bit				US
	CL> Speed controller proportional gain (Kp2)			0.0000 to 6.5535 1/rad s^{-1}		0.0300	0.0100	RW	Uni				US
3.14	OL> Slaving ratio numerator		0.000 to 1.000		1.000			RW	Uni				US
	CL> Speed controller integral gain (Ki2)			0.00 to 655.35 1/rad		0.10	1.00	RW	Uni				US
3.15	OL> Slaving ratio denominator		0.001 to 1.000		1.000			RW	Uni				US
	CL> Speed controller differential feedback gain (Kd2)			0.00000 to 0.65535 s		0.00000		RW	Uni				US
3.16	OL> Enable frequency slaving output		OFF (0) or On (1)		OFF (0)			RW	Bit				US
	CL> Speed controller gain select			OFF (0) or On (1)		OFF (0)		RW	Bit				US
3.17	OL> Select x2048 output		OFF (0) or On (1)		On (1)			RW	Bit				US
	CL> Speed controller set-up method			0 to 3		0		RW	Uni				US
3.18	OL> Select F and D frequency slaving output		OFF (0) or On (1)		OFF (0)			RW	Bit				US
	CL> Motor and load inertia			0.0000 to 90.00000 kg m^2		0.00000		RW	Uni				US
3.19	Compliance angle			0.0 to 359.9 °		4.0		RW	Uni				US
3.20	Bandwidth			0 to 255 Hz		10		RW	Uni				US
3.21	Damping factor			0.0 to 10.0		1.0		RW	Uni				US
3.22	Hard speed reference			±SPEED_FREQ_ MAX rpm		0.0		RW	Bi				US
3.23	Hard speed reference selector			OFF (0) or On (1)		OFF (0)		RW	Bit				US
3.24	Closed-loop vector mode			VT> 0 to 3		0		RW	Uni				US
3.25	Encoder phase angle*	{**0.43**}		SV**>** 0.0 to 359.9 °			0.0	RW	Uni				US
3.26	Speed feedback selector			drv (0), SLot1 (1), SLot2 (2), SLot3 (3)		drv (0)		RW	Txt				US
3.27	Drive encoder speed feedback		±40,000.0 rpm					RO	Bi	FI	NC	PT	
3.28	Drive encoder revolution counter		0 to 65,535 revolutions					RO	Uni	FI	NC	PT	
3.29	Drive encoder position	{**0.11**}	0 to 65,535 1/2^{16}ths of a revolution					RO	Uni	FI	NC	PT	
3.30	Drive encoder fine position		0 to 65,535 1/2^{32}nds of a revolution					RO	Uni	FI	NC	PT	
3.31	Drive encoder marker position reset disable		OFF (0) or On (1)		OFF (0)			RW	Bit				US
3.32	Drive encoder marker flag		OFF (0) or On (1)		OFF (0)			RW	Bit		NC		
3.33	Drive encoder turn bits / Linear encoder comms to sine wave ratio		0 to 255		16			RW	Uni				US
3.34	Drive encoder lines per revolution	{**0.27**}	0 to 50,000		1024		4096	RW	Uni				US
3.35	Drive encoder single turn comms bits / Linear encoder comms bits / Marker mode		0 to 32 bits		0			RW	Uni				US
3.36	Drive encoder supply voltage**		5V (0), 8V (1), 15V (2)		5V (0)			RW	Txt				US
3.37	Drive encoder comms baud rate		100 (0), 200 (1), 300 (2), 400 (3), 500 (4), 1000 (5), 1500 (6), 2000 (7) kBaud		300 (2)			RW	Txt				US
3.38	Drive encoder type		Ab (0), Fd (1), Fr (2), Ab.SErvo (3), Fd.SErvo (4), Fr.SErvo (5), SC (6), SC.Hiper (7), EndAt (8), SC.EndAt (9), SSI (10), SC.SSI (11)		Ab (0)		Ab.SErvo (3)	RW	Txt				US
3.39	Drive encoder termination select / Rotary encoder select / Comms only encoder mode		0 to 2		1			RW	Uni				US
3.40	Drive encoder error detection level		Bit 0 (LSB) = Wire break detect Bit 1 = Phase error detect Bit 2 (MSB) = SSI power supply bit monitor Value is binary sum		0	1		RW	Uni				US

Parameter		Range(⇳)		Default(⇨)			Type					
		OL	CL	OL	VT	SV						
3.41	Drive encoder auto-configuration / SSI binary format select	OFF (0) or On (1)		OFF (0)			RW	Bit				US
3.42	Drive encoder filter	0 (0), 1 (1), 2 (2), 4 (3), 8 (4), 16 (5) ms		0			RW	Txt				US
3.43	Maximum drive encoder reference	0 to 40,000 rpm		1500		3000	RW	Uni				US
3.44	Drive encoder reference scaling	0.000 to 4.000		1.000			RW	Uni				US
3.45	Drive encoder reference	±100.0%					RO	Bi	FI	NC	PT	
3.46	Drive encoder reference destination	Pr **0.00** to **21.50**		Pr **0.00**			RW	Uni		DE	PT	US
3.47	Re-initialise position feedback	OFF (0) or On (1)		OFF (0)			RW	Bit		NC		
3.48	Position feedback initialised	OFF (0) or On (1)					RO	Bit		NC	PT	
3.49	Full motor object electronic nameplate transfer	OFF (0) or On (1)		OFF (0)			RW	Bit				US
3.50	Position feedback lock	OFF (0) or On (1)		OFF (0)			RW	Bit		NC		

RW	Read / Write	RO	Read only	Uni	Unipolar	Bi	Bi-polar	Bit	Bit parameter	Txt	Text string		
FI	Filtered	DE	Destination	NC	Not copied	RA	Rating dependent	PT	Protected	US	User save	PS	Power down save

WARNING

***Encoder phase angle (servo mode only)**

With drive software version V01.08.00 onwards, the encoder phase angles in Pr **3.25** and Pr **21.20** are copied to the SMARTCARD when using any of the SMARTCARD transfer methods.

With drive software version V01.05.00 to V01.07.01, the encoder phase angles in Pr **3.25** and Pr **21.20** are only copied to the SMARTCARD when using either Pr **0.30** set to Prog (2) or Pr **xx.00** set to 3yyy.

This is useful when the SMARTCARD is used to back-up the parameter set of a drive but caution should be used if the SMARTCARD is used to transfer parameter sets between drives.

Unless the encoder phase angle of the servo motor connected to the destination drive is known to be the same as the servo motor connected to the source drive, an autotune should be performed or the encoder phase angle should be entered manually into Pr **3.25** (or Pr **21.20**). If the encoder phase angle is incorrect the drive may lose control of the motor resulting in an O.SPd or Enc10 trip when the drive is enabled.

With drive software version V01.04.00 and earlier, or when using software version V01.05.00 to V01.07.01 and Pr **xx.00** set to 4yyy is used, then the encoder phase angles in Pr **3.25** and Pr **21.20** are not copied to the SMARTCARD. Therefore, Pr **3.25** and Pr **21.20** in the destination would not be changed during a transfer of this data block from the SMARTCARD.

NOTE

If output voltage from the encoder is >5V, then the termination resistors must be disabled Pr **3.39 to 0.

11.4 Menu 4: Torque and current control

Figure 11-5 Menu 4 Open loop logic diagram

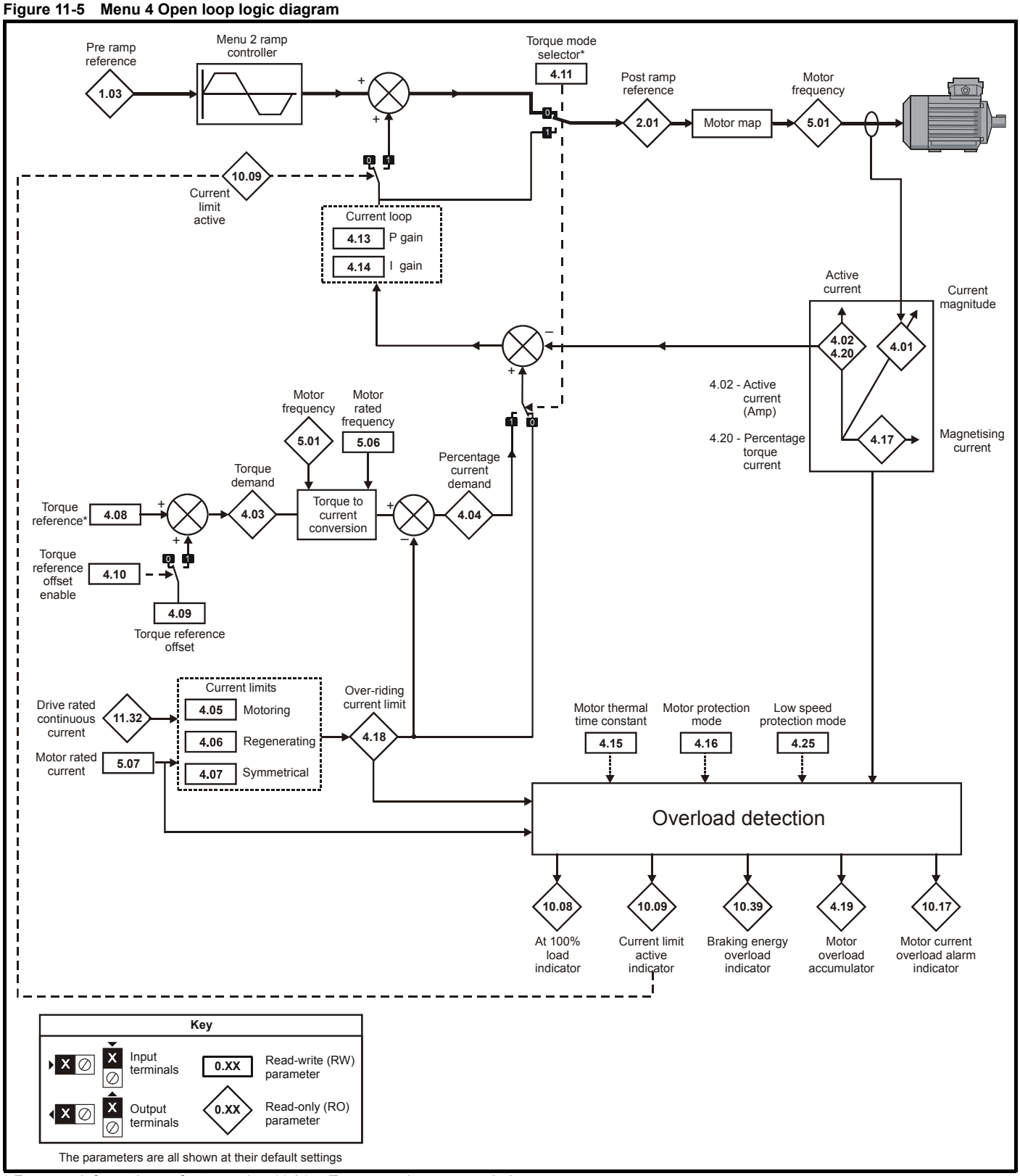

* For more information, refer to section 11.21.4 *Torque modes* on page 258

Figure 11-6 Menu 4 Closed-loop vector logic diagram

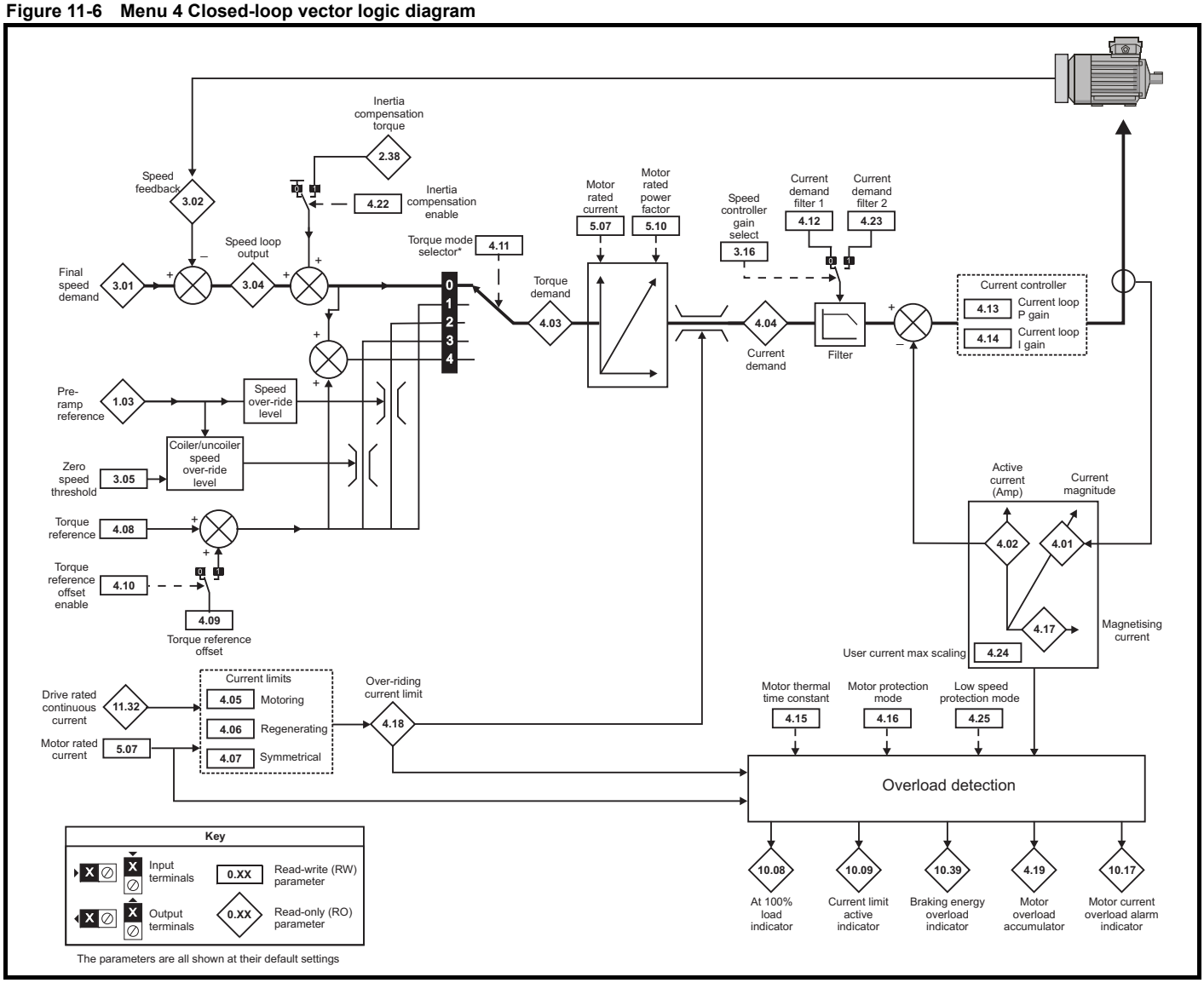

*For more information, refer to section 11.21.4 *Torque modes* on page 258.

Figure 11-7 Menu 4 Servo logic diagram

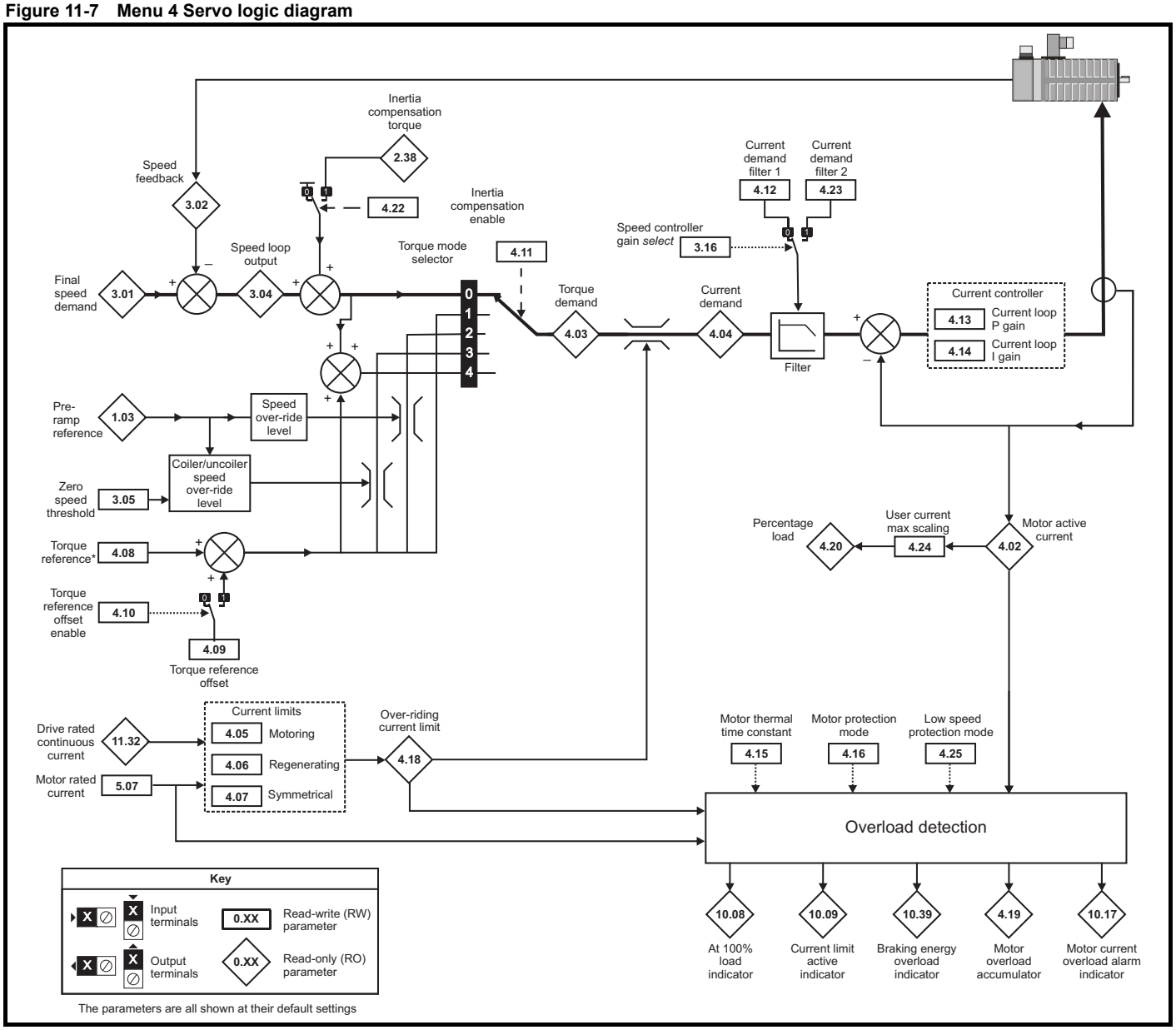

*For more information, refer to section 11.21.4 *Torque modes* on page 258.

Parameter			Range(⇳)		Default(⇨)			Type					
			OL	CL	OL	VT	SV						
4.01	Current magnitude	{**0.12**}	0 to DRIVE_CURRENT_MAX A					RO	Uni	FI	NC	PT	
4.02	Active current	{**0.13**}	±DRIVE_CURRENT_MAX A					RO	Bi	FI	NC	PT	
4.03	Torque demand		±TORQUE_PROD_CURRENT_MAX %					RO	Bi	FI	NC	PT	
4.04	Current demand		±TORQUE_PROD_CURRENT_MAX %					RO	Bi	FI	NC	PT	
4.05	Motoring current limit		0 to MOTOR1_CURRENT_LIMIT_MAX %		165.0*	175.0**		RW	Uni		RA		US
4.06	Regen current limit		0 to MOTOR1_CURRENT_LIMIT_MAX %		165.0*	175.0**		RW	Uni		RA		US
4.07	Symmetrical current limit	{**0.06**}	0 to MOTOR1_CURRENT_LIMIT_MAX %		165.0*	175.0**		RW	Uni		RA		US
4.08	Torque reference		±USER_CURRENT_MAX %		0.00			RW	Bi				US
4.09	Torque offset		±USER_CURRENT_MAX %		0.0			RW	Bi				US
4.10	Torque offset select		OFF (0) or On (1)		OFF (0)			RW	Bit				US
4.11	Torque mode selector	{**0.14**}	0 to 1	0 to 4	0			RW	Uni				US
4.12	Current demand filter 1	{**0.17**}		0.0 to 25.0 ms		0.0		RW	Uni				US
4.13	Current controller Kp gain	{**0.38**}	0 to 30,000		20	200V drive: 75 400V drive: 150 575V drive: 180 690V drive: 215		RW	Uni				US
4.14	Current controller Ki gain	{**0.39**}	0 to 30,000		40	200V drive: 1000 400V drive: 2000 575V drive: 2400 690V drive: 3000		RW	Uni				US
4.15	Thermal time constant	{**0.45**}	0.0 to 3000.0		89.0	89.0	20.0	RW	Uni				US
4.16	Thermal protection mode		0 to 1		0			RW	Bit				US
4.17	Reactive current		±DRIVE_CURRENT_MAX A					RO	Bi	FI	NC	PT	
4.18	Overriding current limit		±TORQUE_PROD_CURRENT_MAX %					RO	Uni		NC	PT	
4.19	Overload accumulator		0 to 100.0 %					RO	Uni		NC	PT	
4.20	Percentage load		±USER_CURRENT_MAX %					RO	Bi	FI	NC	PT	
4.22	Inertia compensation enable			OFF (0) or On (1)		OFF (0)		RW	Bit				US
4.23	Current demand filter 2			0.0 to 25.0 ms		0.0		RW	Uni				US
4.24	User current maximum scaling		0.0 to TORQUE_PROD_CURRENT_MAX %		165.0	175.0		RW	Uni		RA		US
4.25	Low speed thermal protection mode		OFF (0) or On (1)		OFF (0)			RW	Bit				US
4.26	Percentage torque		±USER_CURRENT_MAX %					RO	Bi	FI	NC	PT	

RW	Read / Write	RO	Read only	Uni	Unipolar	Bi	Bi-polar	Bit	Bit parameter	Txt	Text string		
FI	Filtered	DE	Destination	NC	Not copied	RA	Rating dependent	PT	Protected	US	User save	PS	Power down save

* For size 6 the default is 138.1%

**For size 6 the default is 165.7% in closed loop mode and 150.0% in servo mode.

11.5 Menu 5: Motor control

Figure 11-8 Menu 5 Open-loop logic diagram

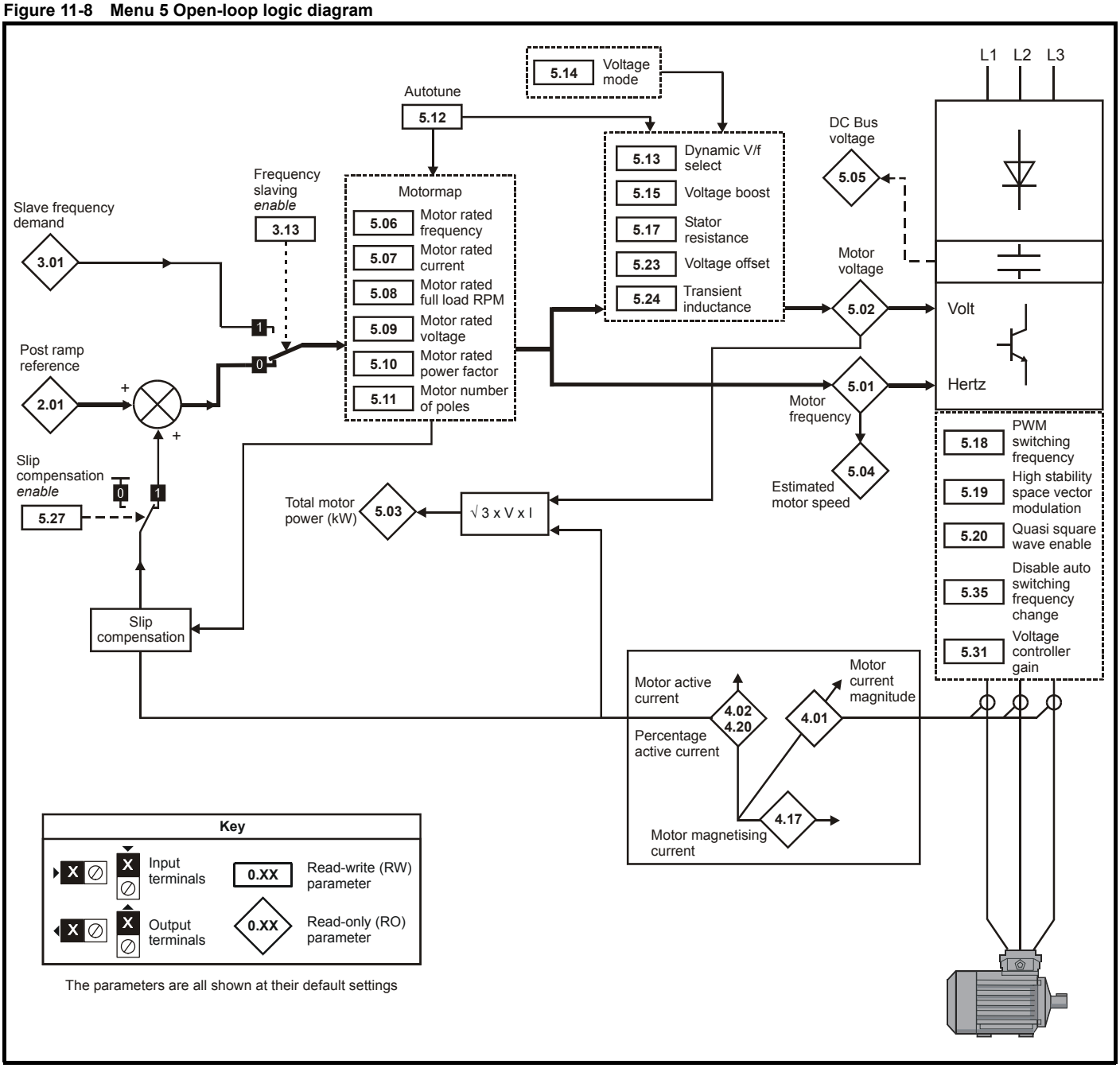

The parameters are all shown at their default settings

Figure 11-9 Menu 5 Closed-loop logic diagram

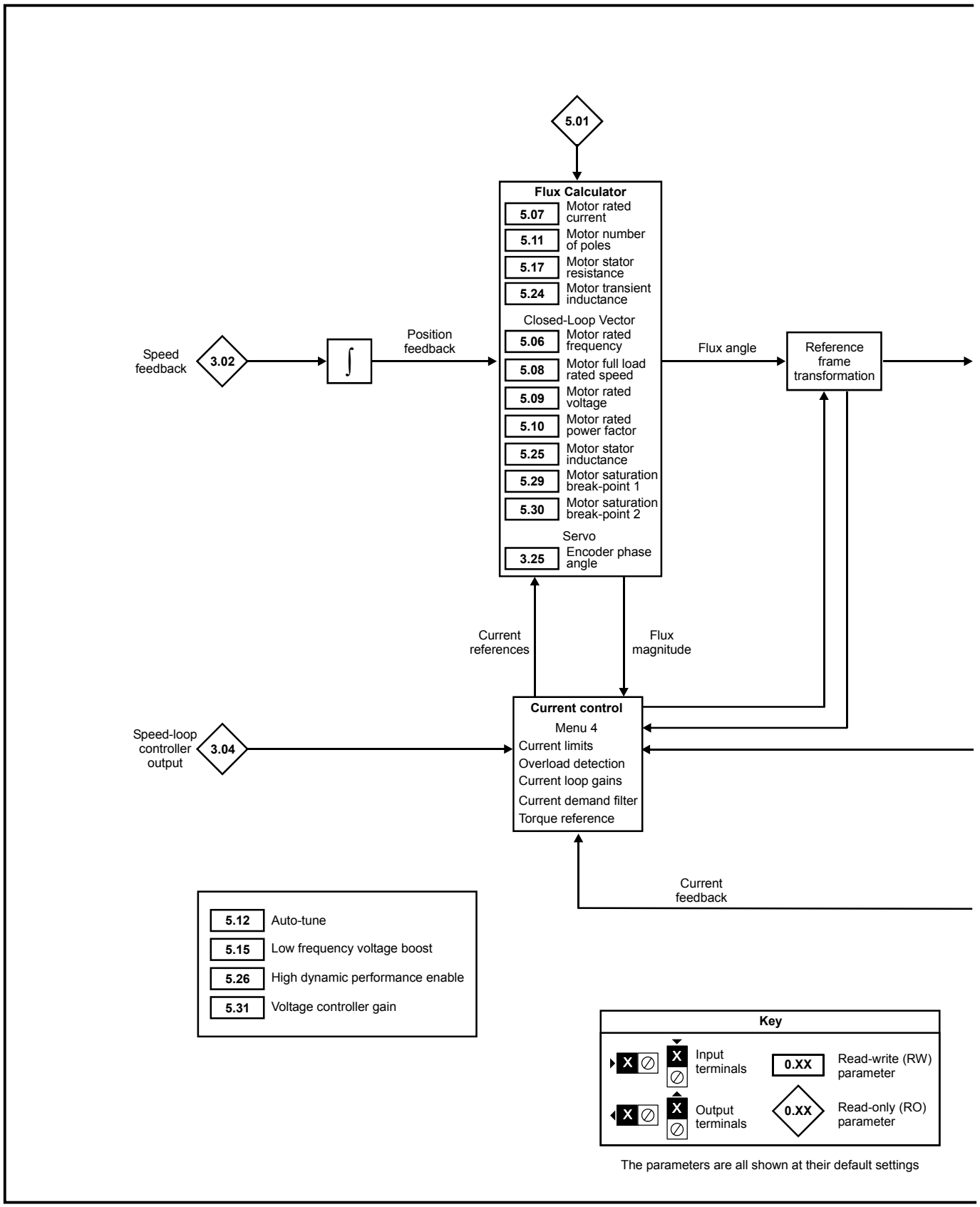

The parameters are all shown at their default settings

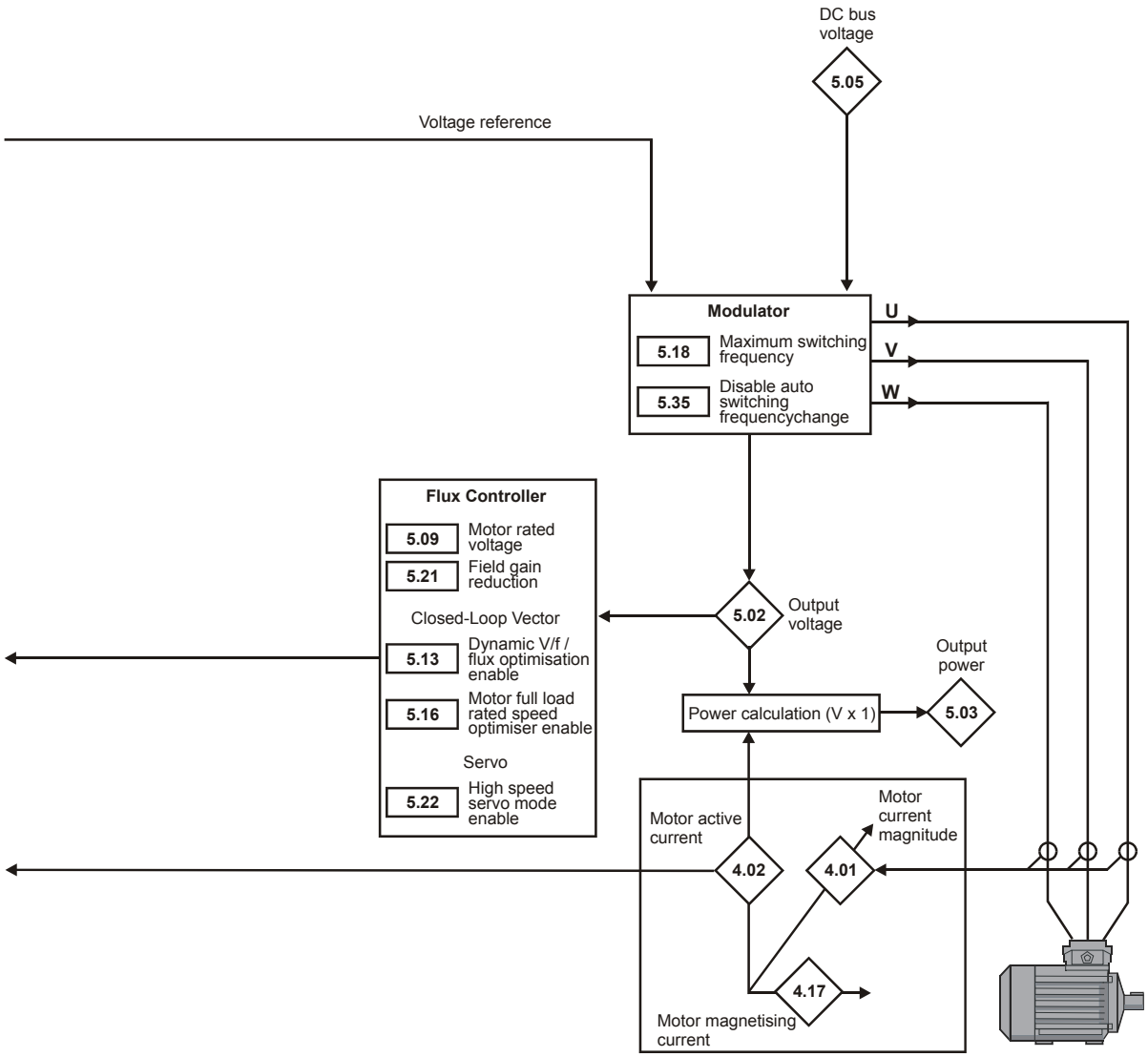
DC bus voltage
5.05
Voltage reference
Modulator
5.18
Maximum switching frequency
5.35
Disable auto switching frequencychange
U
V
W
Flux Controller
5.09
Motor rated voltage
5.21
Field gain reduction
Closed-Loop Vector
5.13
Dynamic V/f / flux optimisation enable
5.16
Motor full load rated speed optimiser enable
Servo
5.22
High speed servo mode enable
5.02
Output voltage
Output power
Power calculation (V x 1)
5.03
Motor active current
Motor current magnitude
4.02
4.01
4.17
Motor magnetising current

Parameter			Range(⇳)		Default(⇨)			Type					
			OL	CL	OL	VT	SV						
5.01	Output frequency	{**0.11**}	±SPEED_FREQ_MAX Hz	±1,250.0 Hz				RO	Bi	FI	NC	PT	
5.02	Output voltage		0 to AC_voltage_max V					RO	Uni	FI	NC	PT	
5.03	Output power		±Power_max kW					RO	Bi	FI	NC	PT	
5.04	Motor rpm	{**0.10**}	±180,000 rpm					RO	Bi	FI	NC	PT	
5.05	D.C bus voltage		0 to +DC_voltage_max V					RO	Uni	FI	NC	PT	
5.06	Rated frequency	{**0.47**}	0 to 3,000 Hz	VT> 0 to 1,250.0 Hz	EUR> 50.0, USA> 60.0			RW	Uni				US
5.07	Motor rated current	{**0.46**}	0 to Rated_current_max A		Drive rated current [**11.32**]			RW	Uni		RA		US
5.08	Rated load rpm / rated speed	{**0.45**}	0 to 180,000 rpm	0.00 to 40,000.00 rpm	EUR> 1,500 USA> 1,800	EUR> 1,450.00 USA> 1,770.00	3,000.00	RW	Uni				US
5.09	Rated voltage	{**0.44**}	0 to AC_VOLTAGE_SET_MAX V		200V drive: 230 400V drive: EUR> 400, USA> 460 575V drive: 575 690V drive: 690			RW	Uni		RA		US
5.10	Rated power factor	{**0.43**}	OL & VT> 0.000 to 1.000		0.850			RW	Uni		RA		US
5.11	Number of motor poles	{**0.42**}	Auto to 120 Pole (0 to 60)		Auto (0)		6 POLE (3)	RW	Txt				US
5.12	Autotune	{**0.40**}	0 to 2	VT> 0 to 4 SV> 0 to 6	0			RW	Uni		NC		
5.13	Dynamic V/F / flux optimise select	{**0.09**}	OFF (0) or On (1)	VT> OFF (0) or On (1)	OFF (0)			RW	Bit				US
5.14	Voltage mode select	{**0.07**}	Ur_S (0), Ur (1), Fd (2), Ur_Auto (3), Ur_I (4), SrE (5)		Ur_I (4)			RW	Txt				US
	Action on enable			SV> nonE (0), Ph EnL (1), Ph Init (2)			nonE(0)	RW	Txt				US
5.15	Low frequency voltage boost	{**0.08**}	0.0 to 25.0 % of motor rated voltage		Size 0 to 3: 3.0 Size 4 & 5: 2.0 Size 6: 1.0			RW	Uni				US
5.16	Rated rpm autotune	{**0.33**}		VT> 0 to 2		0		RW	Uni				US
5.17	Stator resistance		Size 0: 0.000 to 65.000 x 10 Ω Size 1 to 5: 0.000 to 65.000 Ω Size 6: 0.000 to 65.000 x 10 mΩ		0.0			RW	Uni		RA		US
5.18	Maximum switching frequency	{**0.41**}	3 (0), 4 (1), 6 (2), 8 (3), 12 (4), 16 (5) kHz		3 (0)		6 (2)	RW	Txt		RA		US
5.19	High stability space vector modulation		OFF (0) or On (1)		OFF (0)			RW	Bit				US
5.20	Quasi-square enable		OFF (0) or On (1)		OFF (0)			RW	Bit				US
5.21	Field gain reduction			OFF (0) or On (1)		OFF (0)		RW	Bit				US
5.22	High speed servo mode enable			SV> OFF (0) or On (1)			0	RW	Bit				US
5.23	Voltage offset		0.0 to 25.0 V		0.0			RW	Uni		RA		US
5.24	Transient inductance (σL_s)		0.000 to 500.000 mH		0.000			RW	Uni		RA		US
5.25	Stator inductance (L_s)			VT> 0.00 to 5,000.00 mH		0.00		RW	Uni		RA		US
5.26	High dynamic performance enable			OFF (0) or On (1)		OFF (0)		RW	Bit				US
5.27	Enable slip compensation		OFF (0) or On (1)		On (1)			RW	Bit				US
5.28	Field weakening compensation disable			VT> OFF (0) or On (1)		OFF (0)		RW	Bit				US
5.29	Motor saturation breakpoint 1			VT> 0 to 100% of rated flux		50		RW	Uni				US
5.30	Motor saturation breakpoint 2			VT> 0 to 100% of rated flux		75		RW	Uni				US
5.31	Voltage controller gain		0 to 30		1			RW	Uni				US
5.32	Motor torque per amp, K_t			VT> 0.00 to 500.00 N m A^{-1}				RO	Uni				US
				SV> 0.00 to 500.00 N m A^{-1}			1.60	RW	Uni				US
5.33	Motor volts per 1,000 rpm, K_e			SV> 0 to 10,000 V			98	RW	Uni				US
5.35	Disable auto switching frequency change		OFF (0) or On (1)		OFF (0)			RW	Bit				US
5.36	Motor pole pitch		0 to 655.35 mm		0.00			RW	Uni				US
5.37	Actual switching frequency		3 (0), 4 (1), 6 (2), 8 (3), 12 (4), 16 (5), 6 rEd (6), 12 rEd (7)					RO	Txt		NC	PT	
5.38	Minimal movement phasing test angle			SV> 0.0 to 25.5°			5.0	RW	Uni				US
5.39	Minimal movement phasing test pulse length			SV> 0 to 3			0	RW	Uni				US
5.40	Spin start boost		0.0 to 10.0	VT> 0.0 to 10.0	1.0			RW	Uni				US

RW	Read / Write	RO	Read only	Uni	Unipolar	Bi	Bi-polar	Bit	Bit parameter	Txt	Text string		
FI	Filtered	DE	Destination	NC	Not copied	RA	Rating dependent	PT	Protected	US	User save	PS	Power down save

11.6 Menu 6: Sequencer and clock

Figure 11-10 Menu 6 logic diagram

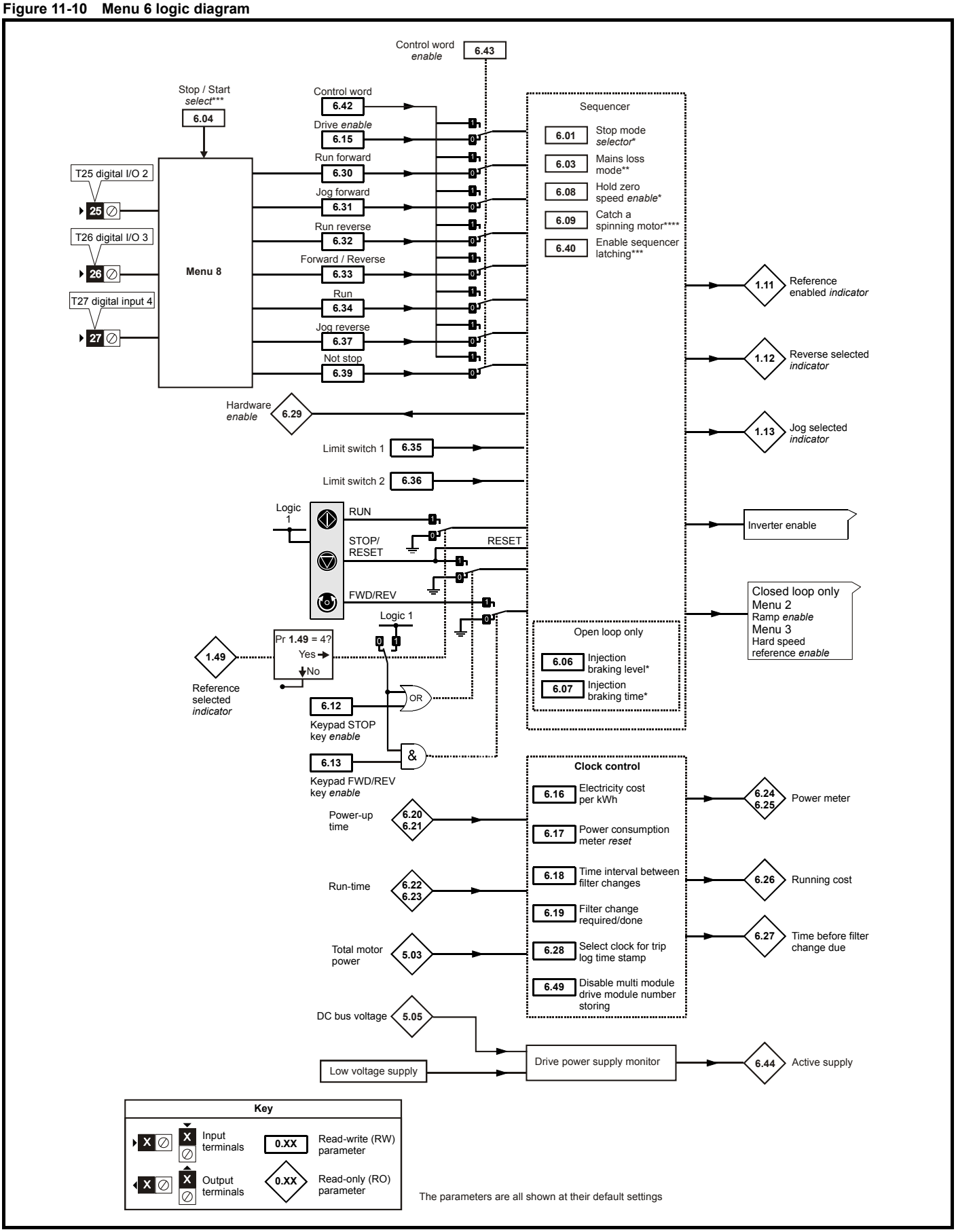

Parameter		Range(⇳)		Default(⇨)			Type					
		OL	CL	OL	VT	SV						
6.01	Stop mode	COASt (0), rP (1), rP.dcl (2), dcl (3), td.dcl (4), diSAbLE (5)	COASt (0), rP (1), no.rP (2)	rP (1)		no.rP (2)	RW	Txt				US
6.03	Line power supply loss mode	diS (0), StoP (1), ridE.th (2)		diS (0)			RW	Txt				US
6.04	Start / stop logic select	0 to 4		4			RW	Uni				US
6.06	Injection braking level	0 to 150.0%		100.0%			RW	Uni		RA		US
6.07	Injection braking time	0.0 to 25.0s		1.0			RW	Uni				US
6.08	Hold zero speed	OFF (0) or On (1)		OFF (0)		On (1)	RW	Bit				US
6.09	Catch a spinning motor {**0.33**}	0 to 3	0 to 1	0	1		RW	Uni				US
6.12	Enable stop key	OFF (0) or On (1)		OFF (0)			RW	Bit				US
6.13	Enable forward / reverse key {**0.28**}	OFF (0) or On (1)		OFF (0)			RW	Bit				US
6.15	Drive enable	OFF (0) or On (1)		On (1)			RW	Bit				US
6.16	Electricity cost per kWh	0.0 to 600.0 currency units per kWh		0			RW	Uni				US
6.17	Reset energy meter	OFF (0) or On (1)		OFF (0)			RW	Bit		NC		
6.18	Time between filter changes	0 to 30,000 hrs		0			RW	Uni				US
6.19	Filter change required / change done	OFF (0) or On (1)		OFF (0)			RW	Bit			PT	
6.20	Powered-up time: years.days	0 to 9.364 years.days					RW	Uni		NC	PT	
6.21	Powered-up time: hours.minutes	0 to 23.59 hours.minutes					RW	Uni		NC	PT	
6.22	Run time: years.days	0 to 9.364 years.days					RO	Uni		NC	PT	PS
6.23	Run time: hours.minutes	0 to 23.59 hours.minutes					RO	Uni		NC	PT	PS
6.24	Energy meter: MWh	±999.9 MWh					RO	Bi		NC	PT	PS
6.25	Energy meter: kWh	±99.99 kWh					RO	Bi		NC	PT	PS
6.26	Running cost	±32,000					RO	Bi		NC	PT	
6.27	Time before filter change due	0 to 30,000 hrs					RO	Uni		NC	PT	PS
6.28	Select clock for trip log time sampling	OFF (0) or On (1)		OFF (0)			RW	Bit				US
6.29	Hardware enable	OFF (0) or On (1)					RO	Bit		NC	PT	
6.30	Sequencing bit: Run forward	OFF (0) or On (1)		OFF (0)			RW	Bit		NC		
6.31	Sequencing bit: Jog forward	OFF (0) or On (1)		OFF (0)			RW	Bit		NC		
6.32	Sequencing bit: Run reverse	OFF (0) or On (1)		OFF (0)			RW	Bit		NC		
6.33	Sequencing bit: Forward / reverse	OFF (0) or On (1)		OFF (0)			RW	Bit		NC		
6.34	Sequencing bit: Run	OFF (0) or On (1)		OFF (0)			RW	Bit		NC		
6.35	Forward limit switch	OFF (0) or On (1)		OFF (0)			RW	Bit		NC		
6.36	Reverse limit switch	OFF (0) or On (1)		OFF (0)			RW	Bit		NC		
6.37	Sequencing bit: Jog reverse	OFF (0) or On (1)		OFF (0)			RW	Bit		NC		
6.39	Sequencing bit: Not stop	OFF (0) or On (1)		OFF (0)			RW	Bit		NC		
6.40	Enable sequencer latching	OFF (0) or On (1)		OFF (0)			RW	Bit				US
6.41	Drive event flags	0 to 65,535		0			RW	Uni		NC		
6.42	Control word	0 to 32,767		0			RW	Uni		NC		
6.43	Control word enable	OFF (0) or On (1)		OFF (0)			RW	Bit				US
6.44	Active supply	OFF (0) or On (1)					RO	Bit		NC	PT	
6.45	Force cooling fan to run at full speed*****	OFF (0) or On (1)		OFF (0)			RW	Bit				US
6.46	Nominal low voltage supply	Size 1: 48V Size 2, 3 and 200V size 4: 48V to 72V 400V size 4 to 6: 48V to 96V		48			RW	Uni			PT	US
6.47	Disable line power supply / phase loss detection from input rectifier	OFF (0) or On (1)		OFF (0)			RW	Bit				US
6.48	Line power supply loss ride through detection level	0 to DC_VOLTAGE_SET_MAX V		200V drive: 205, 400V drive: 410, 575V drive: 540, 690V drive: 540			RW	Uni		RA		US
6.49	Disable multi-module drive module number storing on trip	OFF (0) or On (1)		OFF (0)			RW	Bit				US
6.50	Drive comms state	drv (0), SLot 1(1), SLot 2 (2), SLot 3 (3)					RO	Txt		NC	PT	
6.51	External rectifier not active	OFF (0) or On (1)		OFF (0)			RW	Bit				

RW	Read / Write	RO	Read only	Uni	Unipolar	Bi	Bi-polar	Bit	Bit parameter	Txt	Text string		
FI	Filtered	DE	Destination	NC	Not copied	RA	Rating dependent	PT	Protected	US	User save	PS	Power down save

*For more information, refer to section 11.21.5 *Stop modes* on page 259.

**For more information, refer to section 11.21.6 *Line power supply loss modes* on page 260.

***For more information, refer to section 11.21.7 *Start / stop logic modes* on page 261.

****For more information, refer to section 11.21.8 *Catch a spinning motor* on page 262.

*****The drive thermal model system normally controls the fan speed, however the fan can be forced to operate at full speed if this parameter is set to 1. When this is set to 1 the fan remains at full speed until 10s after this parameter is set to zero. Note that the fan will only run at full speed if the drive is not in a UU condition.

11.7 Menu 7: Analog I/O

Figure 11-11 Menu 7 logic diagram

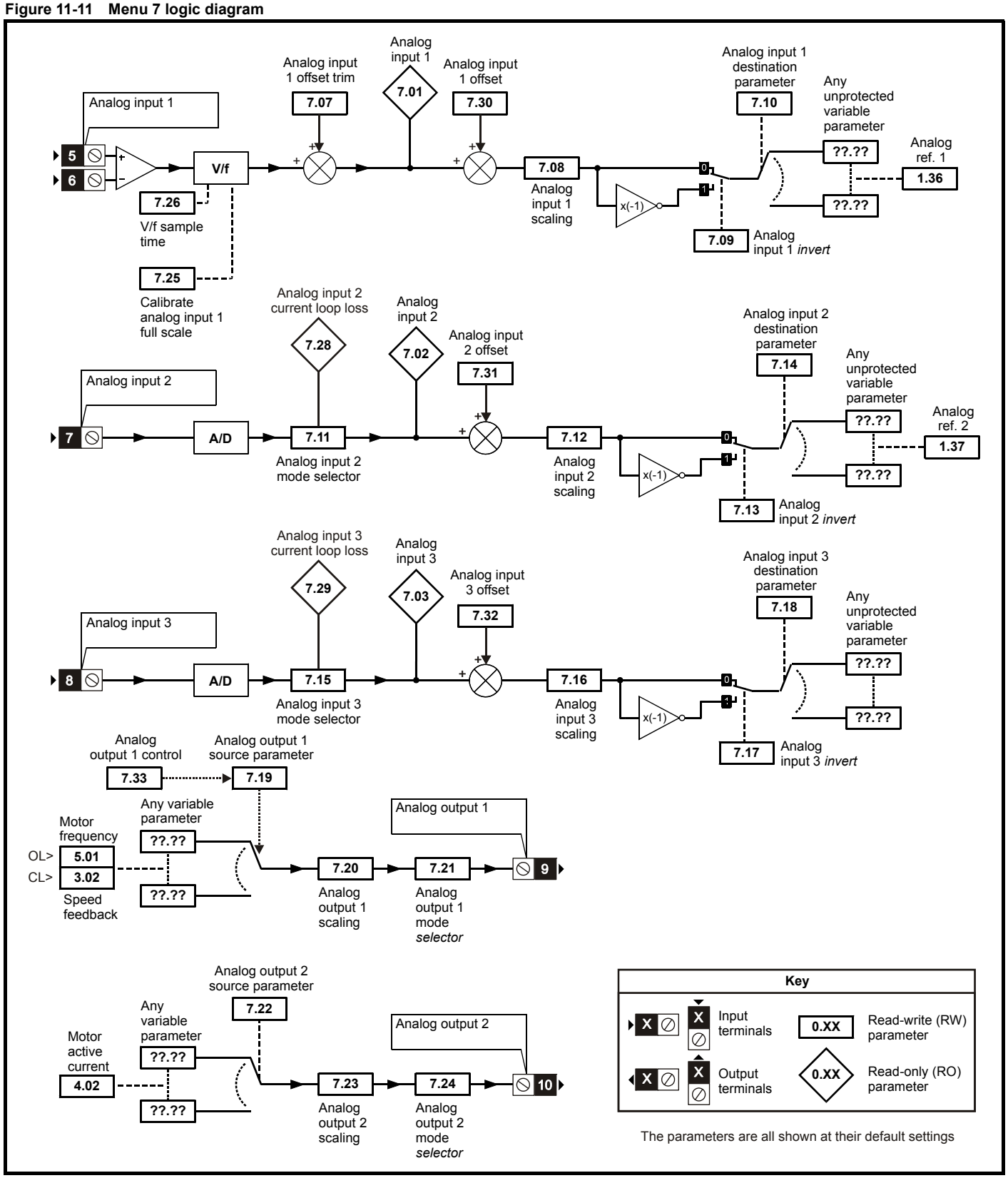

Parameter		Range(⇳)		Default(⇨)			Type					
		OL	CL	OL	VT	SV						
7.01	T5/6 analog input 1 level	±100.00 %					RO	Bi		NC	PT	
7.02	T7 analog input 2 level	±100.0 %					RO	Bi		NC	PT	
7.03	T8 analog input 3 level	±100.0 %					RO	Bi		NC	PT	
7.04	Power circuit temperature 1	-128 to 127 °C					RO	Bi		NC	PT	
7.05	Power circuit temperature 2	-128 to 127 °C					RO	Bi		NC	PT	
7.06	Control board temperature	-128 to 127 °C					RO	Bi		NC	PT	
7.07	T5/6 analog input 1 offset trim {**0.13**}	±10.000 %		0.000			RW	Bi				US
7.08	T5/6 analog input 1 scaling	0 to 4.000		1.000			RW	Uni				US
7.09	T5/6 analog input 1 invert	OFF (0) or On (1)		OFF (0)			RW	Bit				US
7.10	T5/6 analog input 1 destination	Pr **0.00** to **21.51**		Pr **1.36**			RW	Uni	DE		PT	US
7.11	T7 analog input 2 mode {**0.19**}	0-20 (0), 20-0 (1), 4-20.tr (2), 20-4.tr (3), 4-20 (4), 20-4 (5), VOLt (6)		VOLt (6)			RW	Txt				US
7.12	T7 analog input 2 scaling	0 to 4.000		1.000			RW	Uni				US
7.13	T7 analog input 2 invert	OFF (0) or On (1)		OFF (0)			RW	Bit				US
7.14	T7 analog input 2 destination {**0.20**}	Pr **0.00** to **21.51**		Pr **1.37**			RW	Uni	DE		PT	US
7.15	T8 analog input 3 mode {**0.21**}	0-20 (0), 20-0 (1), 4-20.tr (2), 20-4.tr (3), 4-20 (4), 20-4 (5), VOLt (6), th.SC (7), th (8), th.diSP (9)		th (8)			RW	Txt				US
7.16	T8 analog input 3 scaling	0 to 4.000		1.000			RW	Uni				US
7.17	T8 analog input 3 invert	OFF (0) or On (1)		OFF (0)			RW	Bit				US
7.18	T8 analog input 3 destination	Pr **0.00** to **21.51**		Pr **0.00**			RW	Uni	DE		PT	US
7.19	T9 analog output 1 source	Pr **0.00** to **21.51**		Pr **5.01**	Pr **3.02**		RW	Uni			PT	US
7.20	T9 analog output 1 scaling	0.000 to 4.000		1.000			RW	Uni				US
7.21	T9 analog output 1 mode	VOLt (0), 0-20 (1), 4-20 (2), H.SPd (3)		VOLt (0)			RW	Txt				US
7.22	T10 analog output 2 source	Pr **0.00** to **21.51**		Pr **4.02**			RW	Uni			PT	US
7.23	T10 analog output 2 scaling	0.000 to 4.000		1.000			RW	Uni				US
7.24	T10 analog output 2 mode	VOLt (0), 0-20 (1), 4-20 (2), H.SPd (3)		VOLt (0)			RW	Txt				US
7.25	Calibrate T5/6 analog input 1 full scale	OFF (0) or On (1)		OFF (0)			RW	Bit		NC		
7.26	T5/6 analog input 1 sample time	0 to 8.0 ms		4.0			RW	Uni				US
7.28	T7 analog input 2 current loop loss	OFF (0) or On (1)					RO	Bit		NC	PT	
7.29	T8 analog input 3 current loop loss	OFF (0) or On (1)					RO	Bit		NC	PT	
7.30	T5/6 analog input 1 offset	±100.00 %		0.00			RW	Bi				US
7.31	T7 analog input 2 offset	±100.0 %		0.0			RW	Bi				US
7.32	T8 analog input 3 offset	±100.0 %		0.0			RW	Bi				US
7.33	T9 analog output 1 control	Fr (0), Ld (1), AdV (2)		AdV (2)			RW	Txt				US
7.34	IGBT junction temperature	±200 °C					RO	Bi		NC	PT	
7.35	Drive thermal protection accumulator	0 to 100.0 %					RO	Uni		NC	PT	
7.36	Power circuit temperature 3	-128 to 127 °C					RO	Bi		NC	PT	

RW	Read / Write	RO	Read only	Uni	Unipolar	Bi	Bi-polar	Bit	Bit parameter	Txt	Text string		
FI	Filtered	DE	Destination	NC	Not copied	RA	Rating dependent	PT	Protected	US	User save	PS	Power down save

11.8 Menu 8: Digital I/O

Figure 11-12 Menu 8 logic diagram

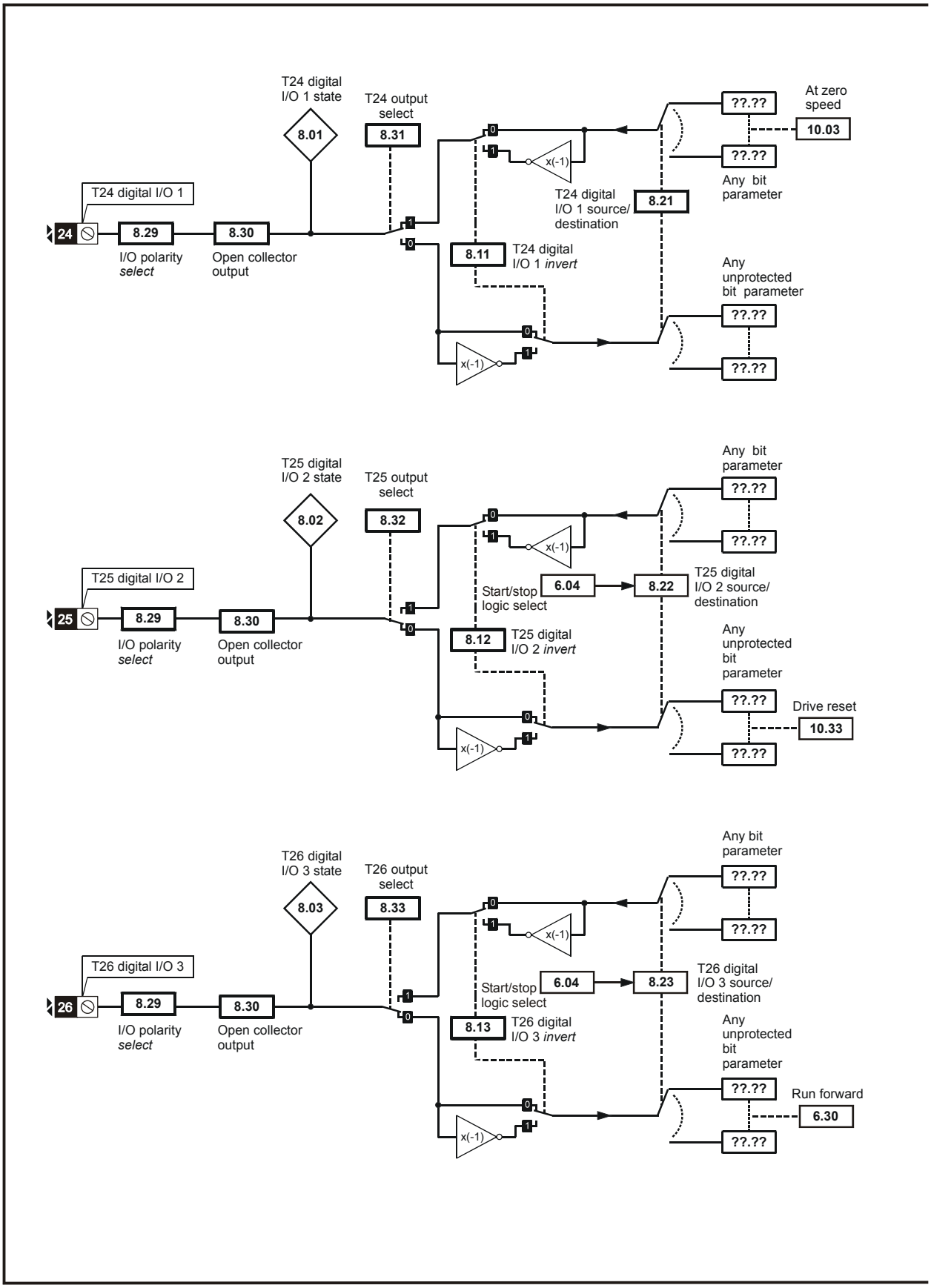

*For more information, refer to section 11.21.1 *Reference modes* on page 256.

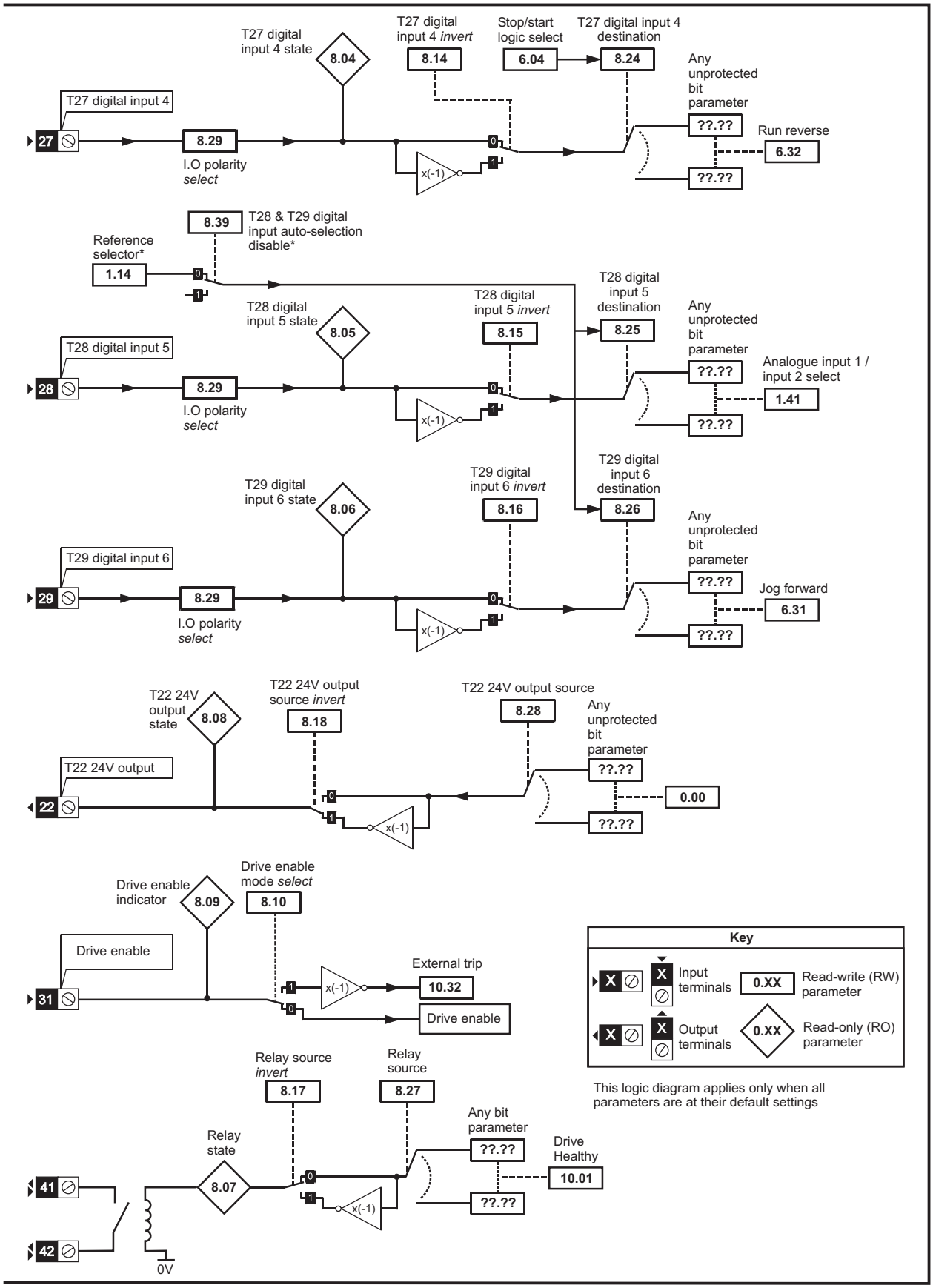
T27 digital input 4 state
8.04
T27 digital input 4 invert
8.14
Stop/start logic select
6.04
T27 digital input 4 destination
8.24
Any unprotected bit parameter
??.??
??.??
Run reverse
6.32
T27 digital input 4
27
8.29
I.O polarity select
x(-1)
8.39
T28 & T29 digital input auto-selection disable*
Reference selector*
1.14
T28 digital input 5 state
8.05
T28 digital input 5 invert
8.15
T28 digital input 5 destination
8.25
Analogue input 1 / input 2 select
1.41
T28 digital input 5
28
T29 digital input 6 state
8.06
T29 digital input 6 invert
8.16
T29 digital input 6 destination
8.26
Jog forward
6.31
T29 digital input 6
29
T22 24V output state
8.08
T22 24V output source invert
8.18
T22 24V output source
8.28
0.00
T22 24V output
22
Drive enable indicator
8.09
Drive enable mode select
8.10
Drive enable
31
External trip
10.32
Relay source invert
8.17
Relay source
8.27
Relay state
8.07
Any bit parameter
Drive Healthy
10.01
41
42
0V
Key
Input terminals
Output terminals
0.XX
Read-write (RW) parameter
Read-only (RO) parameter
This logic diagram applies only when all parameters are at their default settings

Parameter		Range(⇳)		Default(⇨)			Type					
		OL	CL	OL	VT	SV						
8.01	T24 digital I/O 1 state	OFF (0) or On (1)					RO	Bit		NC	PT	
8.02	T25 digital I/O 2 state	OFF (0) or On (1)					RO	Bit		NC	PT	
8.03	T26 digital I/O 3 state	OFF (0) or On (1)					RO	Bit		NC	PT	
8.04	T27 digital input 4 state	OFF (0) or On (1)					RO	Bit		NC	PT	
8.05	T28 digital input 5 state	OFF (0) or On (1)					RO	Bit		NC	PT	
8.06	T29 digital input 6 state	OFF (0) or On (1)					RO	Bit		NC	PT	
8.07	Relay state	OFF (0) or On (1)					RO	Bit		NC	PT	
8.08	T22 24V output state	OFF (0) or On (1)					RO	Bit		NC	PT	
8.09	Drive enable indicator	OFF (0) or On (1)					RO	Bit		NC	PT	
8.10	Drive enable mode select	OFF (0) or On (1)		OFF (0)			RW	Bit				US
8.11	T24 digital I/O 1 invert	OFF (0) or On (1)		OFF (0)			RW	Bit				US
8.12	T25 digital I/O 2 invert	OFF (0) or On (1)		OFF (0)			RW	Bit				US
8.13	T26 digital I/O 3 invert	OFF (0) or On (1)		OFF (0)			RW	Bit				US
8.14	T27 digital input 4 invert	OFF (0) or On (1)		OFF (0)			RW	Bit				US
8.15	T28 digital input 5 invert	OFF (0) or On (1)		OFF (0)			RW	Bit				US
8.16	T29 digital input 6 invert	OFF (0) or On (1)		OFF (0)			RW	Bit				US
8.17	Relay source invert	OFF (0) or On (1)		OFF (0)			RW	Bit				US
8.18	T22 24V output source invert	OFF (0) or On (1)		On (1)			RW	Bit				US
8.20	Digital I/O read word	0 to 511					RO	Uni		NC	PT	
8.21	T24 digital I/O 1 source/ destination	Pr **0.00** to **21.51**		Pr **10.03**			RW	Uni	DE		PT	US
8.22	T25 digital I/O 2 source/ destination	Pr **0.00** to **21.51**		Pr **10.33**			RW	Uni	DE		PT	US
8.23	T26 digital I/O 3 source/ destination	Pr **0.00** to **21.51**		Pr **6.30**			RW	Uni	DE		PT	US
8.24	T27 digital input 4 destination	Pr **0.00** to **21.51**		Pr **6.32**			RW	Uni	DE		PT	US
8.25	T28 digital input 5 destination	Pr **0.00** to **21.51**		Pr **1.41**			RW	Uni	DE		PT	US
8.26	T29 digital input 6 destination {**0.17**}	Pr **0.00** to **21.51**		Pr **6.31**			RW	Uni	DE		PT	US
8.27	Relay source	Pr **0.00** to **21.51**		Pr **10.01**			RW	Uni			PT	US
8.28	T22 24V output source	Pr **0.00** to **21.51**		Pr **0.00**			RW	Uni			PT	US
8.29	Positive logic select {**0.18**}	OFF (0) or On (1)		On (1)			RW	Bit			PT	US
8.30	Open collector output	OFF (0) or On (1)		OFF (0)			RW	Bit				US
8.31	T24 digital I/O 1 output select	OFF (0) or On (1)		On (1)			RW	Bit				US
8.32	T25 digital I/O 2 output select	OFF (0) or On (1)		OFF (0)			RW	Bit				US
8.33	T26 digital I/O 3 output select	OFF (0) or On (1)		OFF (0)			RW	Bit				US
8.39	T28 & T29 digital input auto-selection disable {**0.16**}	OFF (0) or On (1)		OFF (0)			RW	Bit				US

RW	Read / Write	RO	Read only	Uni	Unipolar	Bi	Bi-polar	Bit	Bit parameter	Txt	Text string		
FI	Filtered	DE	Destination	NC	Not copied	RA	Rating dependent	PT	Protected	US	User save	PS	Power down save

11.9 Menu 9: Programmable logic, motorized pot, binary sum and timers

Figure 11-13 Menu 9 logic diagram: Programmable logic

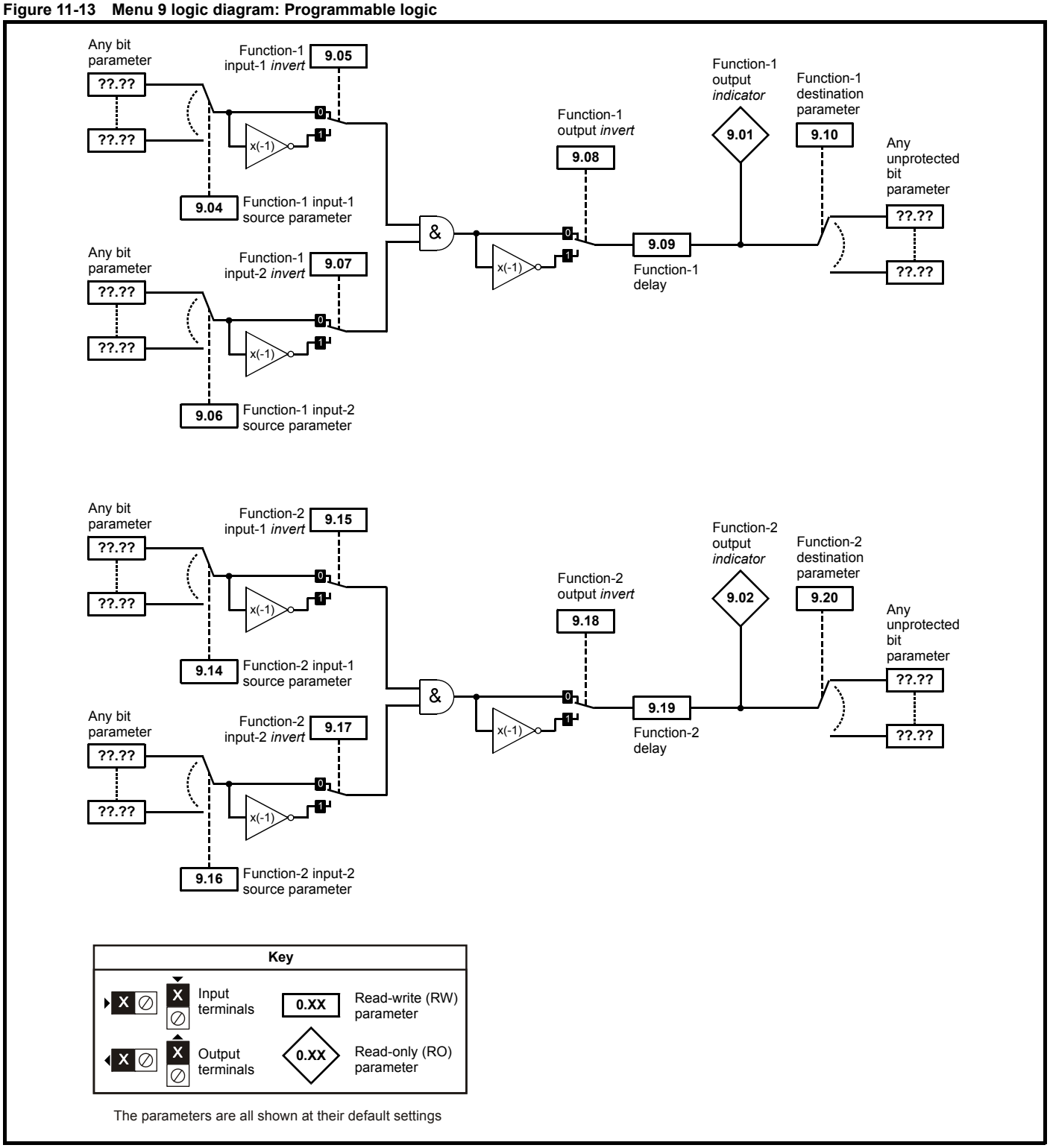

The parameters are all shown at their default settings

Figure 11-14 Menu 9 logic diagram: Motorized pot and binary sum

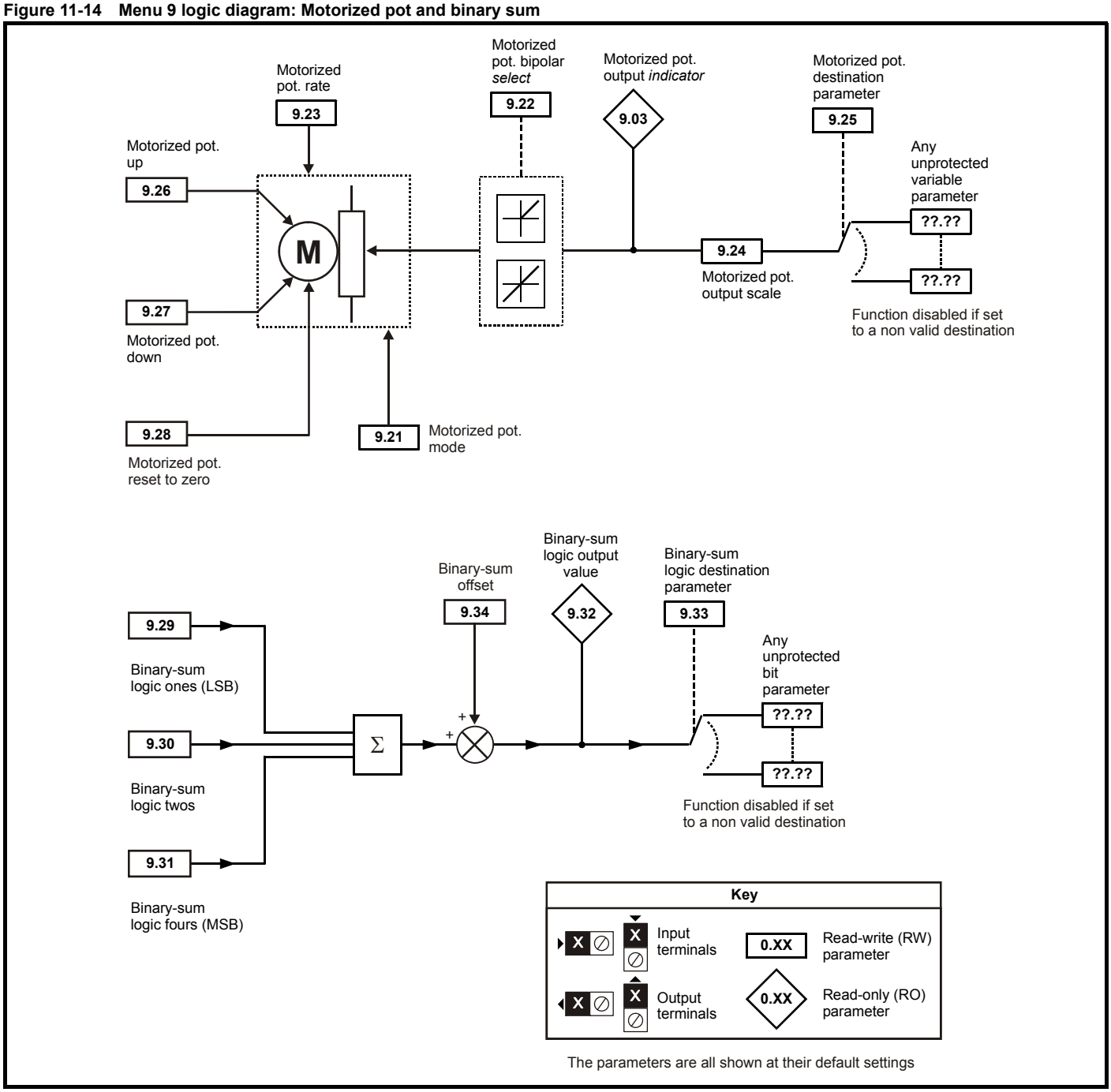

The parameters are all shown at their default settings

Parameter		Range(⇳)		Default(⇨)			Type					
		OL	CL	OL	VT	SV						
9.01	Logic function 1 output	OFF (0) or On (1)					RO	Bit		NC	PT	
9.02	Logic function 2 output	OFF (0) or On (1)					RO	Bit		NC	PT	
9.03	Motorized pot output	±100.00 %					RO	Bi		NC	PT	PS
9.04	Logic function 1 source 1	Pr **0.00** to **21.51**		Pr **0.00**			RW	Uni			PT	US
9.05	Logic function 1 source 1 invert	OFF (0) or On (1)		OFF (0)			RW	Bit				US
9.06	Logic function 1 source 2	Pr **0.00** to **21.51**		Pr **0.00**			RW	Uni			PT	US
9.07	Logic function 1 source 2 invert	OFF (0) or On (1)		OFF (0)			RW	Bit				US
9.08	Logic function 1 output invert	OFF (0) or On (1)		OFF (0)			RW	Bit				US
9.09	Logic function 1 delay	±25.0 s		0.0			RW	Bi				US
9.10	Logic function 1 destination	Pr **0.00** to **21.51**		Pr **0.00**			RW	Uni	DE		PT	US
9.14	Logic function 2 source 1	Pr **0.00** to **21.51**		Pr **0.00**			RW	Uni			PT	US
9.15	Logic function 2 source 1 invert	OFF (0) or On (1)		OFF (0)			RW	Bit				US
9.16	Logic function 2 source 2	Pr **0.00** to **21.51**		Pr **0.00**			RW	Uni			PT	US
9.17	Logic function 2 source 2 invert	OFF (0) or On (1)		OFF (0)			RW	Bit				US
9.18	Logic function 2 output invert	OFF (0) or On (1)		OFF (0)			RW	Bit				US
9.19	Logic function 2 delay	±25.0 s		0.0			RW	Bi				US
9.20	Logic function 2 destination	Pr **0.00** to **21.51**		Pr **0.00**			RW	Uni	DE		PT	US
9.21	Motorized pot mode	0 to 3		2			RW	Uni				US
9.22	Motorized pot bipolar select	OFF (0) or On (1)		OFF (0)			RW	Bit				US
9.23	Motorized pot rate	0 to 250 s		20			RW	Uni				US
9.24	Motorized pot scale factor	0.000 to 4.000		1.000			RW	Uni				US
9.25	Motorized pot destination	Pr **0.00** to **21.51**		Pr **0.00**			RW	Uni	DE		PT	US
9.26	Motorized pot up	OFF (0) or On (1)		OFF (0)			RW	Bit		NC		
9.27	Motorized pot down	OFF (0) or On (1)		OFF (0)			RW	Bit		NC		
9.28	Motorized pot reset	OFF (0) or On (1)		OFF (0)			RW	Bit		NC		
9.29	Binary sum ones input	OFF (0) or On (1)		OFF (0)			RW	Bit		NC		
9.30	Binary sum twos input	OFF (0) or On (1)		OFF (0)			RW	Bit		NC		
9.31	Binary sum fours input	OFF (0) or On (1)		OFF (0)			RW	Bit		NC		
9.32	Binary sum output	0 to 255					RO	Uni		NC	PT	
9.33	Binary sum destination	Pr **0.00** to **21.51**		Pr **0.00**			RW	Uni	DE		PT	US
9.34	Binary sum offset	0 to 248		0			RW	Uni				US

RW	Read / Write	RO	Read only	Uni	Unipolar	Bi	Bi-polar	Bit	Bit parameter	Txt	Text string		
FI	Filtered	DE	Destination	NC	Not copied	RA	Rating dependent	PT	Protected	US	User save	PS	Power down save

11.10 Menu 10: Status and trips

Parameter		Range(⇳)		Default(⇨)			Type					
		OL	CL	OL	VT	SV						
10.01	Drive OK	OFF (0) or On (1)					RO	Bit		NC	PT	
10.02	Drive active	OFF (0) or On (1)					RO	Bit		NC	PT	
10.03	Zero speed	OFF (0) or On (1)					RO	Bit		NC	PT	
10.04	Running at or below minimum speed	OFF (0) or On (1)					RO	Bit		NC	PT	
10.05	Below set speed	OFF (0) or On (1)					RO	Bit		NC	PT	
10.06	At speed	OFF (0) or On (1)					RO	Bit		NC	PT	
10.07	Above set speed	OFF (0) or On (1)					RO	Bit		NC	PT	
10.08	Load reached	OFF (0) or On (1)					RO	Bit		NC	PT	
10.09	Drive output is at current limit	OFF (0) or On (1)					RO	Bit		NC	PT	
10.10	Regenerating	OFF (0) or On (1)					RO	Bit		NC	PT	
10.11	Braking IGBT active	OFF (0) or On (1)					RO	Bit		NC	PT	
10.12	Braking resistor alarm	OFF (0) or On (1)					RO	Bit		NC	PT	
10.13	Direction commanded	OFF (0) or On (1) [0 = FWD, 1 = REV]					RO	Bit		NC	PT	
10.14	Direction running	OFF (0) or On (1) [0 = FWD, 1 = REV]					RO	Bit		NC	PT	
10.15	Line power supply loss	OFF (0) or On (1)					RO	Bit		NC	PT	
10.16	Under voltage active	OFF (0) or On (1)					RO	Bit		NC	PT	
10.17	Overload alarm	OFF (0) or On (1)					RO	Bit		NC	PT	
10.18	Drive over temperature alarm	OFF (0) or On (1)					RO	Bit		NC	PT	
10.19	Drive warning	OFF (0) or On (1)					RO	Bit		NC	PT	
10.20	Trip 0	0 to 232*					RO	Txt		NC	PT	PS
10.21	Trip 1	0 to 232*					RO	Txt		NC	PT	PS
10.22	Trip 2	0 to 232*					RO	Txt		NC	PT	PS
10.23	Trip 3	0 to 232*					RO	Txt		NC	PT	PS
10.24	Trip 4	0 to 232*					RO	Txt		NC	PT	PS
10.25	Trip 5	0 to 232*					RO	Txt		NC	PT	PS
10.26	Trip 6	0 to 232*					RO	Txt		NC	PT	PS
10.27	Trip 7	0 to 232*					RO	Txt		NC	PT	PS
10.28	Trip 8	0 to 232*					RO	Txt		NC	PT	PS
10.29	Trip 9	0 to 232*					RO	Txt		NC	PT	PS
10.30	Full power braking time	0.00 to 400.00 s		See Table 11-6			RW	Uni				US
10.31	Full power braking period	0.0 to 1500.0 s		See Table 11-6			RW	Uni				US
10.32	External trip	OFF (0) or On (1)		OFF (0)			RW	Bit		NC		
10.33	Drive reset	OFF (0) or On (1)		OFF (0)			RW	Bit		NC		
10.34	No. of auto-reset attempts	0 to 5		0			RW	Uni				US
10.35	Auto-reset delay	0.0 to 25.0 s		1.0			RW	Uni				US
10.36	Hold drive OK until last attempt	OFF (0) or On (1)		OFF (0)			RW	Bit				US
10.37	Action on trip detection	0 to 15		0			RW	Uni				US
10.38	User trip	0 to 255		0			RW	Uni		NC		
10.39	Braking energy overload accumulator	0.0 to 100.0 %					RO	Uni		NC	PT	
10.40	Status word	0 to 32,767					RO	Uni		NC	PT	
10.41	Trip 0 time: years.days	0.000 to 9.365 years.days					RO	Uni		NC	PT	PS
10.42	Module number for trip 0, or, Trip 0 time: hours.minutes	00.00 to 23.59 hours.minutes					RO	Uni		NC	PT	PS
10.43	Module number for trip 1, or, Trip 1 time	0 to 600.00 hours.minutes					RO	Uni		NC	PT	PS
10.44	Module number for trip 2, or, Trip 2 time	0 to 600.00 hours.minutes					RO	Uni		NC	PT	PS
10.45	Module number for trip 3, or, Trip 3 time	0 to 600.00 hours.minutes					RO	Uni		NC	PT	PS
10.46	Module number for trip 4, or, Trip 4 time	0 to 600.00 hours.minutes					RO	Uni		NC	PT	PS
10.47	Module number for trip 5, or, Trip 5 time	0 to 600.00 hours.minutes					RO	Uni		NC	PT	PS
10.48	Module number for trip 6, or, Trip 6 time	0 to 600.00 hours.minutes					RO	Uni		NC	PT	PS
10.49	Module number for trip 7, or, Trip 7 time	0 to 600.00 hours.minutes					RO	Uni		NC	PT	PS
10.50	Module number for trip 8, or, Trip 8 time	0 to 600.00 hours.minutes					RO	Uni		NC	PT	PS
10.51	Module number for trip 9, or, Trip 9 time	0 to 600.00 hours.minutes					RO	Uni		NC	PT	PS

RW	Read / Write	RO	Read only	Uni	Unipolar	Bi	Bi-polar	Bit	Bit parameter	Txt	Text string		
FI	Filtered	DE	Destination	NC	Not copied	RA	Rating dependent	PT	Protected	US	User save	PS	Power down save

*The value given for the range is that obtained via serial communication. For the text string displayed on the drive, see Chapter 13 *Diagnostics* on page 283.

Table 11-6 Defaults for Pr 10.30 and Pr 10.31

Drive rating	Pr 10.30	Pr 10.31
200V, size 0	0.06	2.6
400V, size 0	0.01	1.7
200V, size 1 & 2	0.09	3.3
400V, size 1 & 2	0.02	3.3
All other ratings and frame sizes	0.00	

11.11 Menu 11: General drive set-up

Parameter			Range(⇳)		Default(⇨)			Type					
			OL	CL	OL	VT	SV						
11.01	Parameter 0.11 set up		Pr **1.00** to Pr **21.51**		Pr **5.01**		Pr **3.29**	RW	Uni			PT	US
11.02	Parameter 0.12 set up		Pr **1.00** to Pr **21.51**		Pr **4.01**			RW	Uni			PT	US
11.03	Parameter 0.13 set up		Pr **1.00** to Pr **21.51**		Pr **4.02**		Pr **7.07**	RW	Uni			PT	US
11.04	Parameter 0.14 set up		Pr **1.00** to Pr **21.51**		Pr **4.11**			RW	Uni			PT	US
11.05	Parameter 0.15 set up		Pr **1.00** to Pr **21.51**		Pr **2.04**			RW	Uni			PT	US
11.06	Parameter 0.16 set up		Pr **1.00** to Pr **21.51**		Pr **8.39**	Pr **2.02**		RW	Uni			PT	US
11.07	Parameter 0.17 set up		Pr **1.00** to Pr **21.51**		Pr **8.26**	Pr **4.12**		RW	Uni			PT	US
11.08	Parameter 0.18 set up		Pr **1.00** to Pr **21.51**		Pr **8.29**			RW	Uni			PT	US
11.09	Parameter 0.19 set up		Pr **1.00** to Pr **21.51**		Pr **7.11**			RW	Uni			PT	US
11.10	Parameter 0.20 set up		Pr **1.00** to Pr **21.51**		Pr **7.14**			RW	Uni			PT	US
11.11	Parameter 0.21 set up		Pr **1.00** to Pr **21.51**		Pr **7.15**			RW	Uni			PT	US
11.12	Parameter 0.22 set up		Pr **1.00** to Pr **21.51**		Pr **1.10**			RW	Uni			PT	US
11.13	Parameter 0.23 set up		Pr **1.00** to Pr **21.51**		Pr **1.05**			RW	Uni			PT	US
11.14	Parameter 0.24 set up		Pr **1.00** to Pr **21.51**		Pr **1.21**			RW	Uni			PT	US
11.15	Parameter 0.25 set up		Pr **1.00** to Pr **21.51**		Pr **1.22**			RW	Uni			PT	US
11.16	Parameter 0.26 set up		Pr **1.00** to Pr **21.51**		Pr **1.23**	Pr **3.08**		RW	Uni			PT	US
11.17	Parameter 0.27 set up		Pr **1.00** to Pr **21.51**		Pr **1.24**	Pr **3.34**		RW	Uni			PT	US
11.18	Parameter 0.28 set up		Pr **1.00** to Pr **21.51**		Pr **6.13**			RW	Uni			PT	US
11.19	Parameter 0.29 set up		Pr **1.00** to Pr **21.51**		Pr **11.36**			RW	Uni			PT	US
11.20	Parameter 0.30 set up		Pr **1.00** to Pr **21.51**		Pr **11.42**			RW	Uni			PT	US
11.21	Parameter 0.30 scaling		0.000 to 9.999		1.000			RW	Uni				US
11.22	Parameter displayed at power-up		Pr **0.00** to **00.59**		Pr **0.10**			RW	Uni			PT	US
11.23	Serial address	{**0.37**}	0 to 247		1			RW	Uni				US
11.24	Serial mode	{**0.35**}	AnSI (0), rtU (1), Lcd (2)		rtU (1)			RW	Txt			PT	US
11.25	Baud rate	{**0.36**}	300 (0), 600 (1), 1200 (2), 2400 (3), 4800 (4), 9600 (5), 19200 (6), 38400 (7), 57600 (8)*, 115200 (9)* *Modbus RTU only		19200 (6)			RW	Txt				US
11.26	Minimum comms transmit delay		0 to 250ms		2			RW	Uni				US
11.28	Drive derivative		0 to 16					RO	Uni		NC	PT	
11.29	Software version	{**0.50**}	1.00 to 99.99					RO	Uni		NC	PT	
11.30	User security code	{**0.34**}	0 to 999		0			RW	Uni		NC	PT	PS
11.31	User drive mode	{**0.48**}	OPEn LP (1), CL VECt (2), SErVO (3), rEGEn (4)		OPEn LP (1)	CL VECt (2)	SErVO (3)	RW	Txt		NC	PT	
11.32	Maximum Heavy Duty current rating	{**0.32**}	0.00 to 9999.99A					RO	Uni		NC	PT	
11.33	Drive voltage rating	{**0.31**}	200 (0), 400 (1), 575 (2), 690 (3)					RO	Txt		NC	PT	
11.34	Software sub-version		0 to 99					RO	Uni		NC	PT	
11.35	Number of modules		0 to 10		0			RW	Uni			PT	US
11.36	SMARTCARD parameter data previously loaded	{**0.29**}	0 to 999		0			RO	Uni		NC	PT	US
11.37	SMARTCARD data number		0 to 1003		0			RW	Uni		NC		
11.38	SMARTCARD data type / mode		0 to 18					RO	Txt		NC	PT	
11.39	SMARTCARD data version		0 to 9,999		0			RW	Uni		NC		
11.40	SMARTCARD data checksum		0 to 65,335					RO	Uni		NC	PT	
11.41	Status mode timeout		0 to 250s		240			RW	Uni				US
11.42	Parameter copying	{**0.30**}	nonE (0), rEAd (1), Prog (2), AutO (3), boot (4)		nonE (0)			RW	Txt		NC		*
11.43	Load defaults		nonE (0), Eur (1), USA (2)		nonE (0)			RW	Txt		NC		
11.44	Security status	{**0.49**}	L1 (0), L2 (1), Loc (2)					RW	Txt			PT	US
11.45	Select motor 2 parameters		OFF (0) or On (1)		OFF (0)			RW	Bit				US
11.46	Defaults previously loaded		0 to 2000					RO	Uni		NC	PT	US
11.47	Drive Onboard PLC program enable		Halt program (0) Run program: out of range = clip (1) Run program: out of range = trip (2)		Run program: out of range = trip (2)			RW	Uni				US
11.48	Drive Onboard PLC program status		-128 to +127					RO	Bi		NC	PT	
11.49	Drive Onboard PLC programming events		0 to 65,535					RO	Uni		NC	PT	PS
11.50	Drive Onboard PLC program average scan time		0 to 65,535 ms					RO	Uni		NC	PT	
11.51	Drive Onboard PLC program first run		OFF (0) or On (1)					RO	Bit		NC	PT	

RW	Read / Write	RO	Read only	Uni	Unipolar	Bi	Bi-polar	Bit	Bit parameter	Txt	Text string		
FI	Filtered	DE	Destination	NC	Not copied	RA	Rating dependent	PT	Protected	US	User save	PS	Power down save

* Modes 1 and 2 are not user saved, Modes 0, 3 and 4 are user saved

11.12 Menu 12: Threshold detectors, variable selectors and brake control function

Figure 11-15 Menu 12 logic diagram

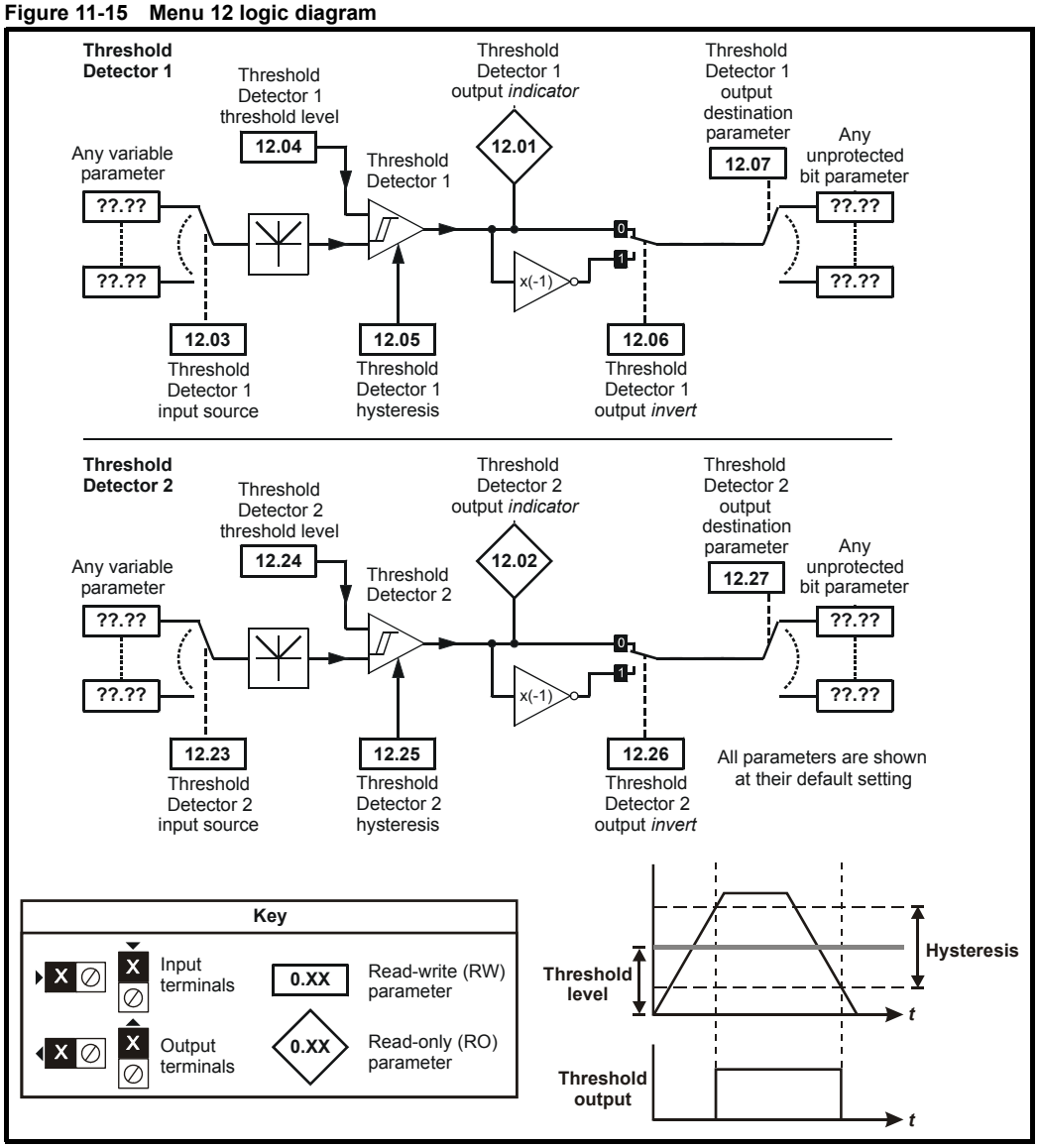

Figure 11-16 Menu 12 logic diagram (continued)

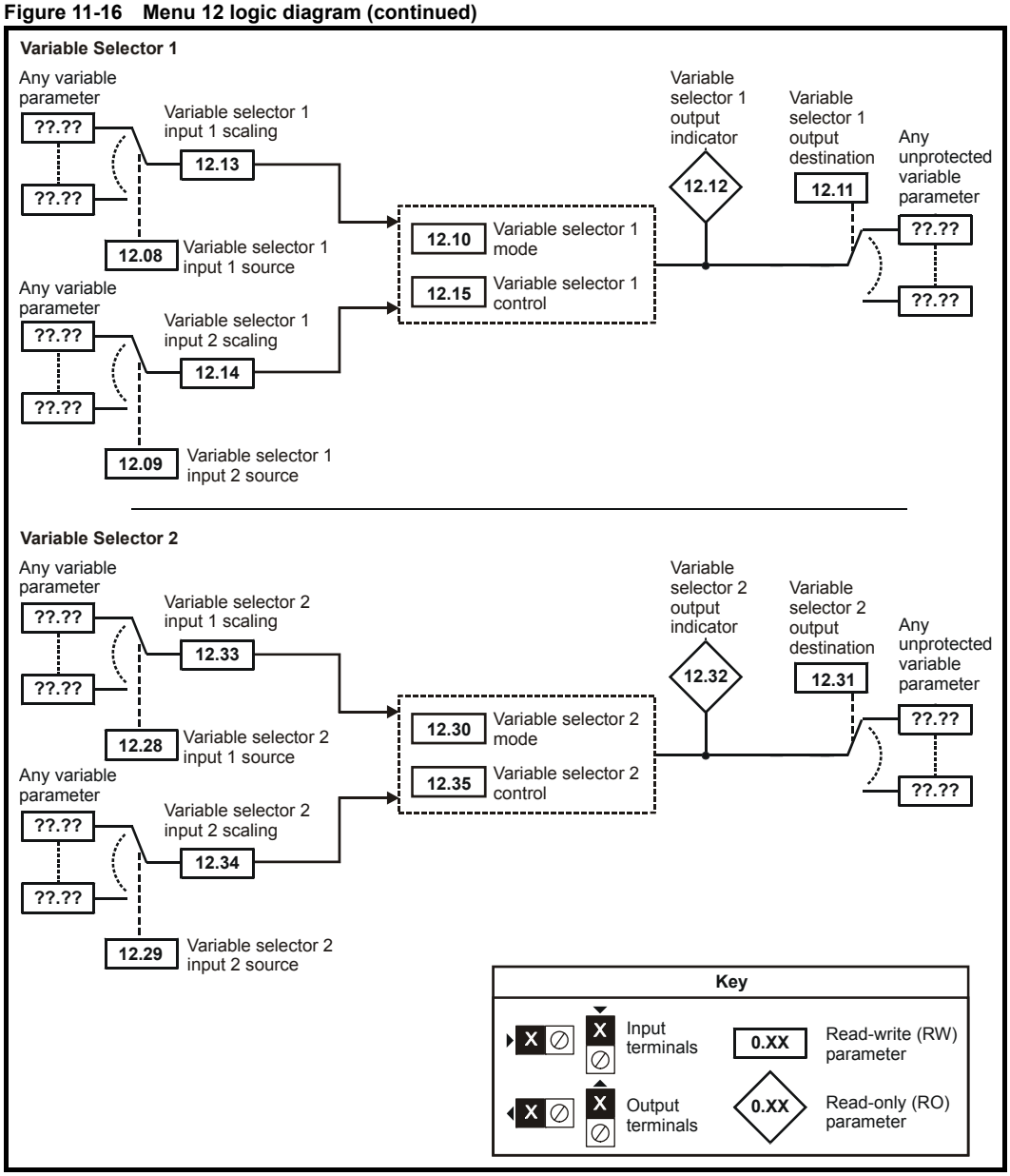

WARNING

The brake control functions are provided to allow well co-ordinated operation of an external brake with the drive. While both hardware and software are designed to high standards of quality and robustness, they are not intended for use as safety functions, i.e. where a fault or failure would result in a risk of injury. In any application where the incorrect operation of the brake release mechanism could result in injury, independent protection devices of proven integrity must also be incorporated.

WARNING

The control terminal relay can be selected as an output to release a brake. If a drive is set up in this manner and a drive replacement takes place, prior to programming the drive on initial power up, the brake may be released.
When drive terminals are programmed to non default settings the result of incorrect or delayed programming must be considered. The use of a SMARTCARD in boot mode or an SM-Applications module can ensure drive parameters are immediately programmed to avoid this situation.

Figure 11-17 Open-loop brake function

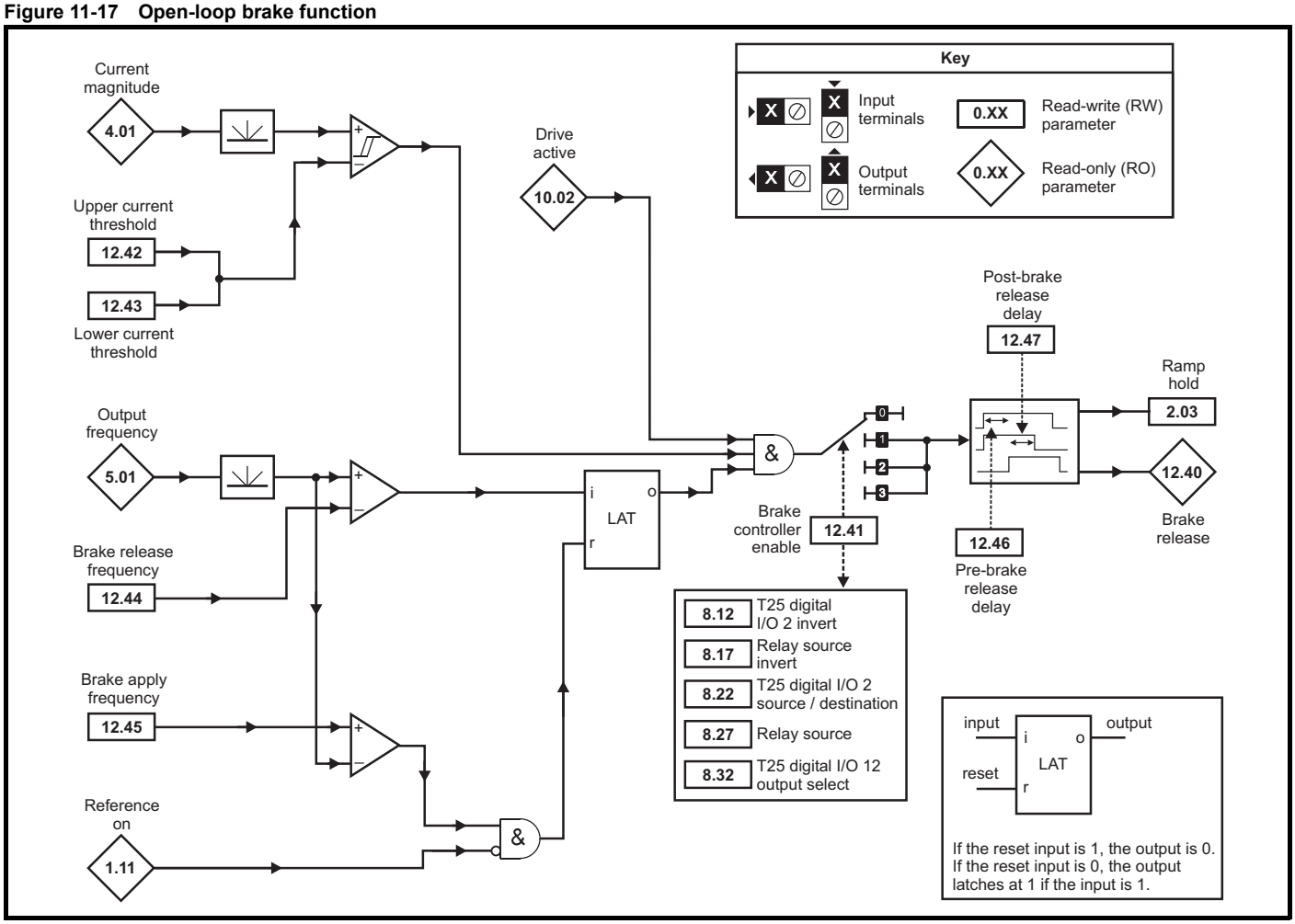

Figure 11-18 Open-loop brake sequence

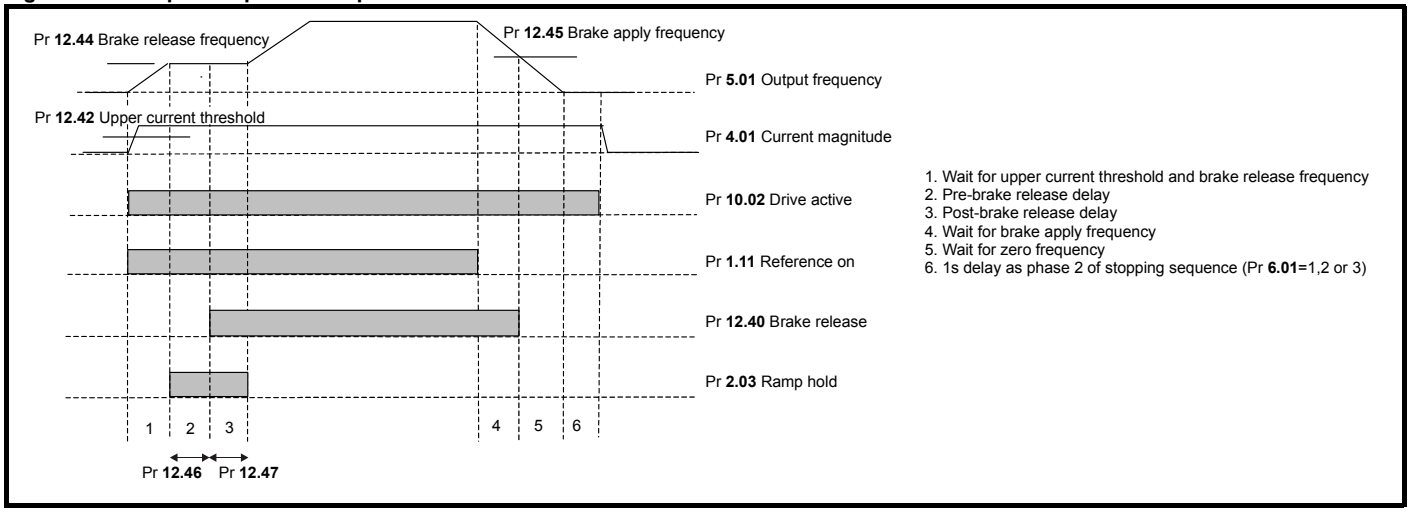

WARNING

The brake control functions are provided to allow well co-ordinated operation of an external brake with the drive. While both hardware and software are designed to high standards of quality and robustness, they are not intended for use as safety functions, i.e. where a fault or failure would result in a risk of injury. In any application where the incorrect operation of the brake release mechanism could result in injury, independent protection devices of proven integrity must also be incorporated.

WARNING

The control terminal relay can be selected as an output to release a brake. If a drive is set up in this manner and a drive replacement takes place, prior to programming the drive on initial power up, the brake may be released.
When drive terminals are programmed to non default settings the result of incorrect or delayed programming must be considered. The use of a Smartcard in boot mode or an SM-Applications module can ensure drive parameters are immediately programmed to avoid this situation.

Figure 11-19 Closed-loop brake function

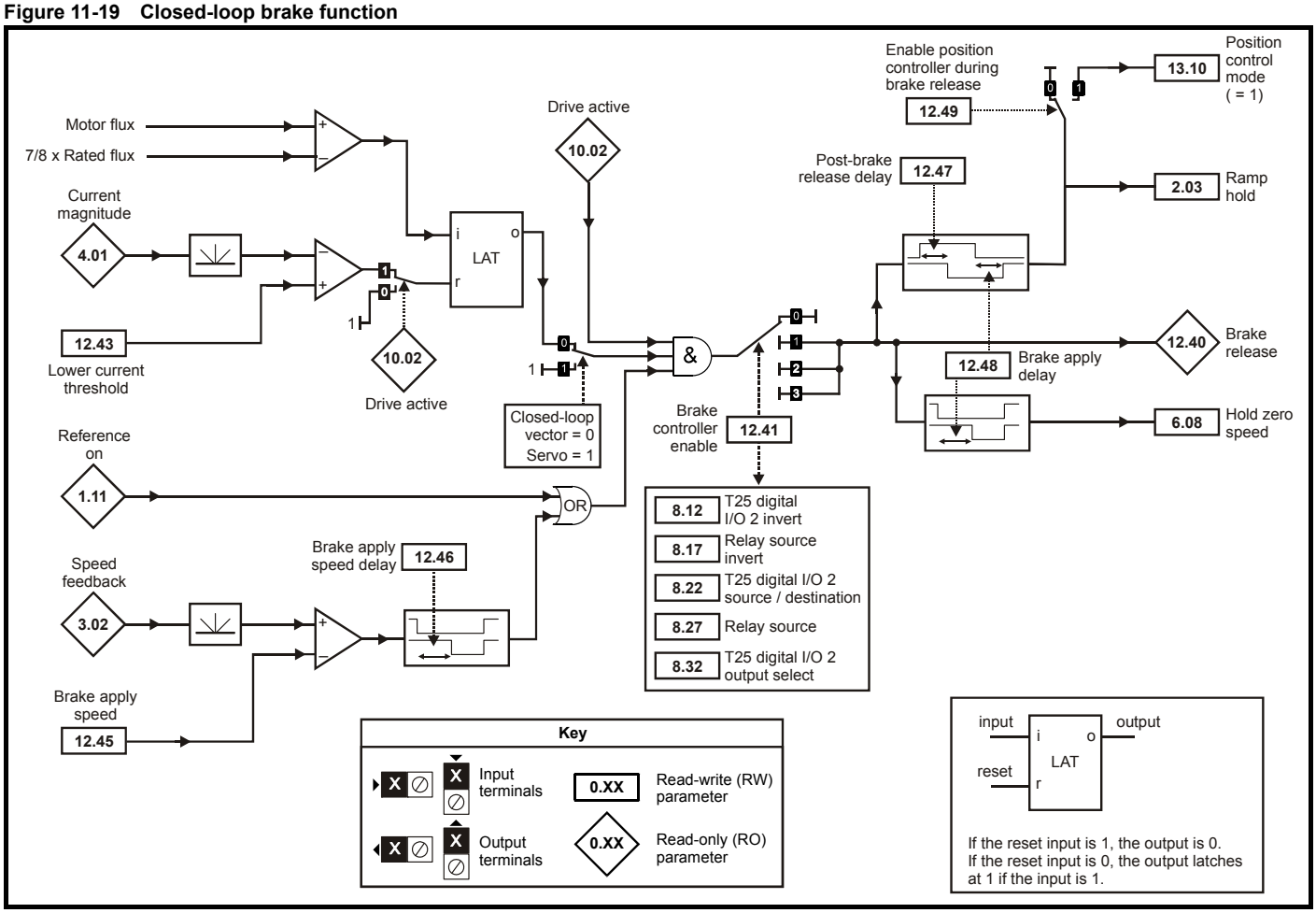

Figure 11-20 Closed-loop brake sequence

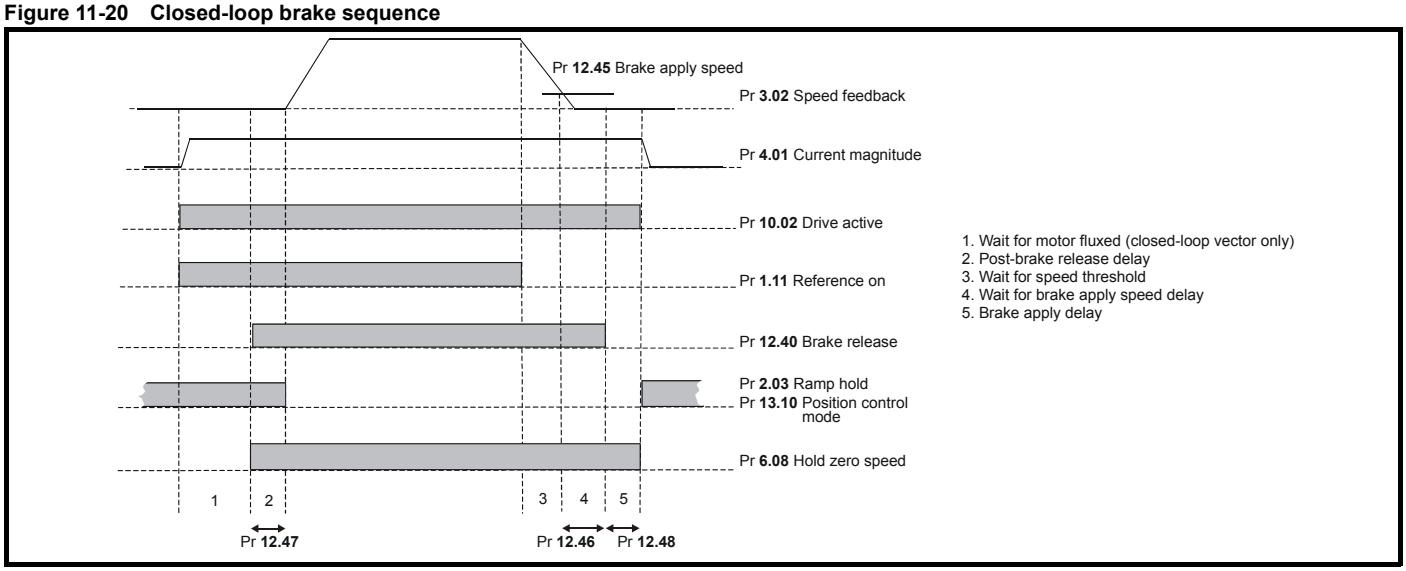

Parameter		Range(⇳)		Default(⇨)			Type					
		OL	CL	OL	VT	SV						
12.01	Threshold detector 1 output	OFF (0) or On (1)					RO	Bit		NC	PT	
12.02	Threshold detector 2 output	OFF (0) or On (1)					RO	Bit		NC	PT	
12.03	Threshold detector 1 source	Pr **0.00** to **21.51**		Pr **0.00**			RW	Uni			PT	US
12.04	Threshold detector 1 level	0.00 to 100.00 %		0.00			RW	Uni				US
12.05	Threshold detector 1 hysteresis	0.00 to 25.00 %		0.00			RW	Uni				US
12.06	Threshold detector 1 output invert	OFF (0) or On (1)		OFF (0)			RW	Bit				US
12.07	Threshold detector 1 destination	Pr **0.00** to **21.51**		Pr **0.00**			RW	Uni	DE		PT	US
12.08	Variable selector 1 source 1	Pr **0.00** to **21.51**		Pr **0.00**			RW	Uni			PT	US
12.09	Variable selector 1 source 2	Pr **0.00** to **21.51**		Pr **0.00**			RW	Uni			PT	US
12.10	Variable selector 1 mode	Select input 1 (0), select input 2 (1), add (2), subtract (3), multiply (4), divide (5), time constant (6), linear ramp (7), modulus (8), powers (9), sectional control (10), external rectifier monitor (11)		Select input 1 (0)			RW	Uni				US
12.11	Variable selector 1 destination	Pr **0.00** to **21.51**		Pr **0.00**			RW	Uni	DE		PT	US
12.12	Variable selector 1 output	±100.00 %					RO	Bi		NC	PT	
12.13	Variable selector 1 source 1 scaling	±4.000		1.000			RW	Bi				US
12.14	Variable selector 1 source 2 scaling	±4.000		1.000			RW	Bi				US
12.15	Variable selector 1 control	0.00 to 100.00 s		0.00			RW	Uni				US
12.23	Threshold detector 2 source	Pr **0.00** to **21.51**		Pr **0.00**			RW	Uni			PT	US
12.24	Threshold detector 2 level	0.00 to 100.00 %		0.00			RW	Uni				US
12.25	Threshold detector 2 hysteresis	0.00 to 25.00 %		0.00			RW	Uni				US
12.26	Threshold detector 2 output invert	OFF (0) or On (1)		OFF (0)			RW	Bit				US
12.27	Threshold detector 2 destination	Pr **0.00** to **21.51**		Pr **0.00**			RW	Uni	DE		PT	US
12.28	Variable selector 2 source 1	Pr **0.00** to **21.51**		Pr **0.00**			RW	Uni			PT	US
12.29	Variable selector 2 source 2	Pr **0.00** to **21.51**		Pr **0.00**			RW	Uni			PT	US
12.30	Variable selector 2 mode	Select input 1 (0), select input 2 (1), add (2), subtract (3), multiply (4), divide (5), time constant (6), linear ramp (7), modulus (8), powers (9), sectional control (10), external rectifier monitor (11)		Select input 1 (0)			RW	Uni				US
12.31	Variable selector 2 destination	Pr **0.00** to **21.51**		Pr **0.00**			RW	Uni	DE		PT	US
12.32	Variable selector 2 output	±100.00 %					RO	Bi		NC	PT	
12.33	Variable selector 2 source 1 scaling	±4.000		1.000			RW	Bi				US
12.34	Variable selector 2 source 2 scaling	±4.000		1.000			RW	Bi				US
12.35	Variable selector 2 control	0.00 to 100.00 s		0.00			RW	Uni				US

WARNING

The brake control functions are provided to allow well co-ordinated operation of an external brake with the drive. While both hardware and software are designed to high standards of quality and robustness, they are not intended for use as safety functions, i.e. where a fault or failure would result in a risk of injury. In any application where the incorrect operation of the brake release mechanism could result in injury, independent protection devices of proven integrity must also be incorporated.

12.40	Brake release indicator	OFF (0) or On (1)					RO	Bit		NC	PT	
12.41	Brake controller enable	dis (0), rEL (1), d IO (2), USEr (3)		dis (0)			RW	Txt				US
12.42	Upper current threshold	0 to 200 %		50			RW	Uni				US
12.43	Lower current threshold	0 to 200 %		10			RW	Uni				US
12.44	Brake release frequency	0.0 to 20.0 Hz		1.0			RW	Uni				US
12.45	Brake apply frequency / speed	0.0 to 20.0 Hz	0 to 200 rpm	2.0	5		RW	Bit				US
12.46	OL> Pre-brake release delay CL> Brake apply speed delay	0.0 to 25.0 s		1.0			RW	Uni				US
12.47	Post brake release delay	0.0 to 25.0 s		1.0			RW	Uni				US
12.48	Brake apply delay		0.0 to 25.0 s		1.0		RW	Uni				US
12.49	Enable position controller during brake release		OFF (0) or On (1)		OFF (0)		RW	Bit				US

RW	Read / Write	RO	Read only	Uni	Unipolar	Bi	Bi-polar	Bit	Bit parameter	Txt	Text string		
FI	Filtered	DE	Destination	NC	Not copied	RA	Rating dependent	PT	Protected	US	User save	PS	Power down save

11.13 Menu 13: Position control

Figure 11-21 Menu 13 Open-loop logic diagram

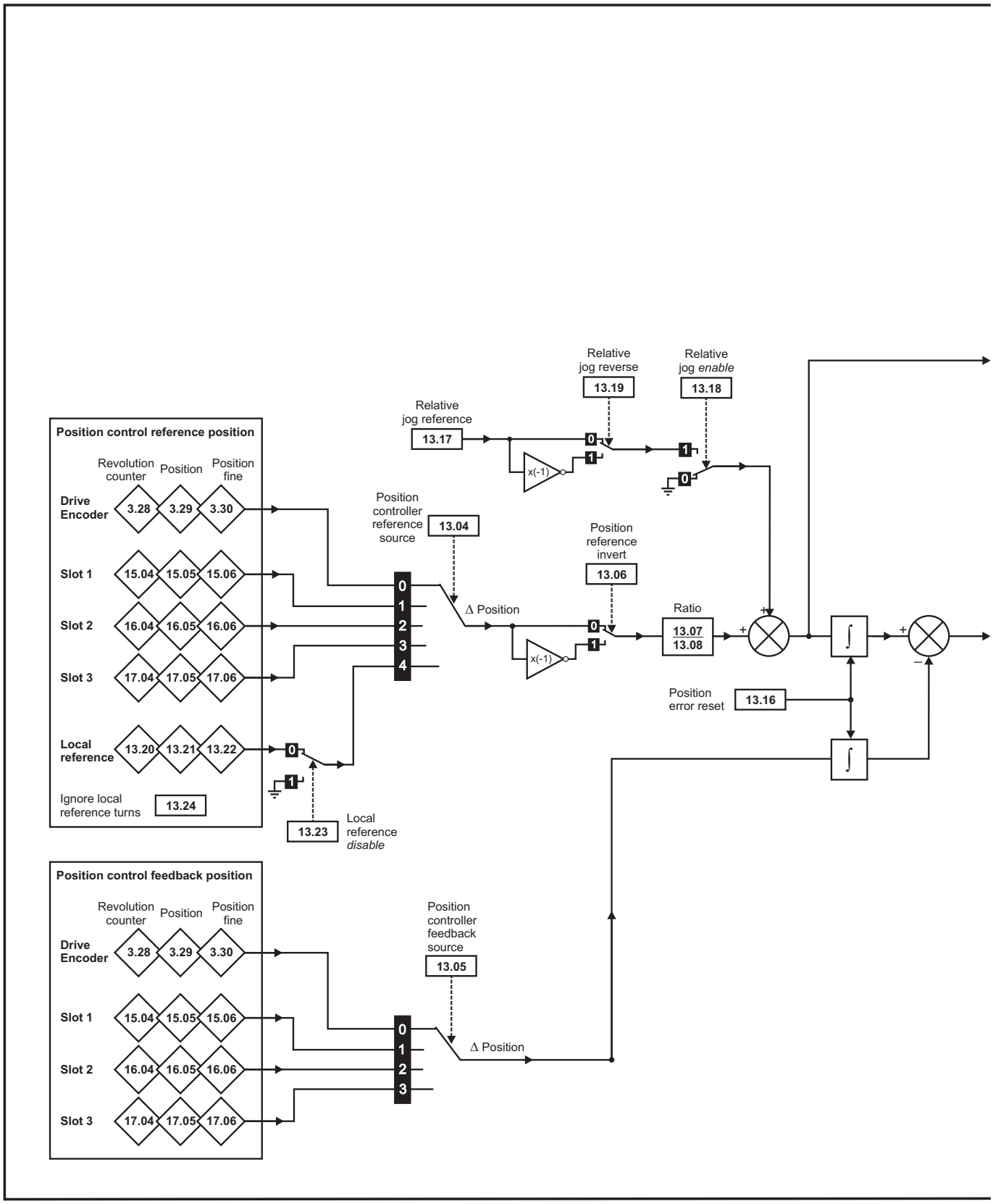

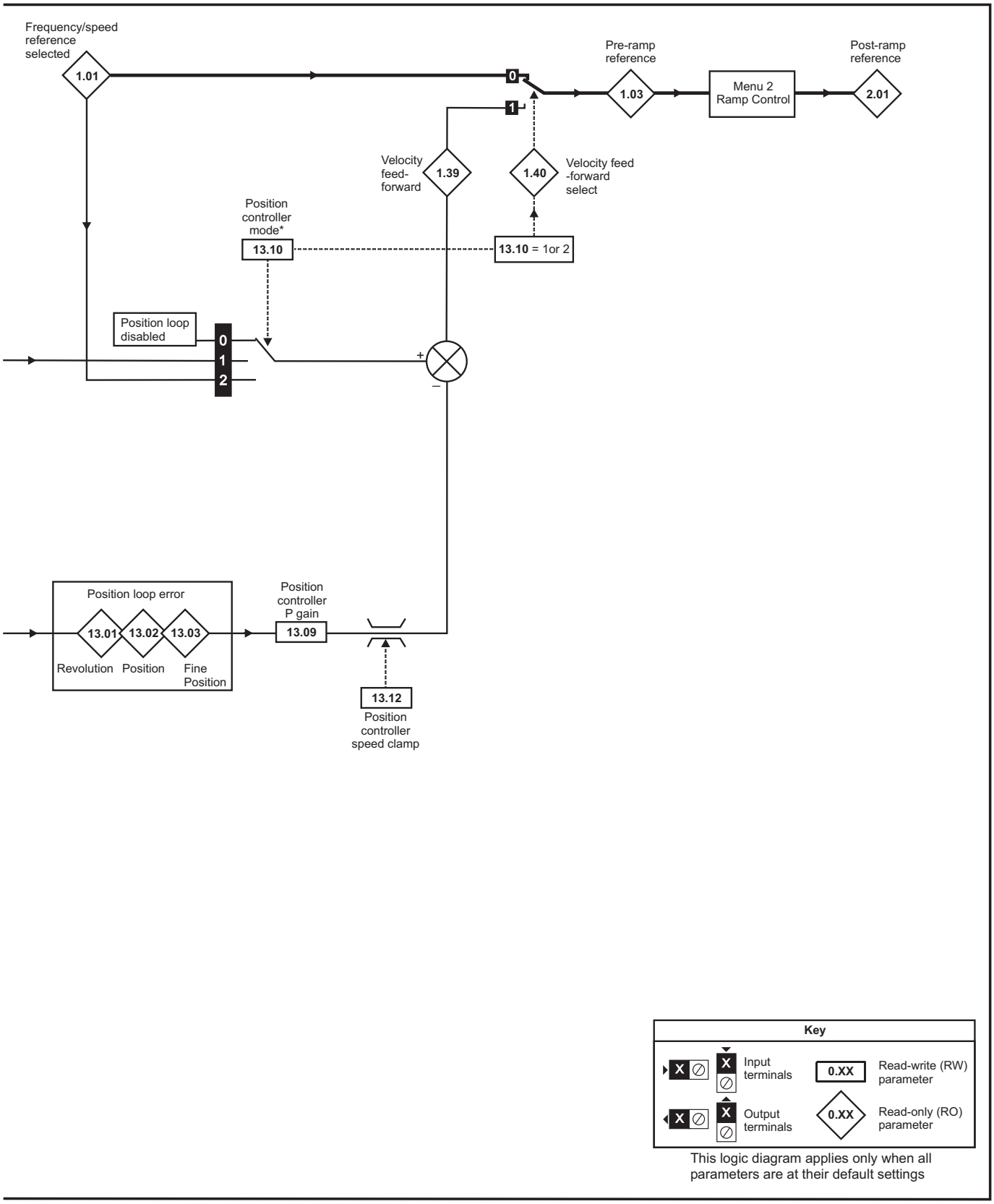

*For more information, refer to section 11.21.9 *Position modes* on page 263.

Figure 11-22 Menu 13 Closed-loop logic diagram

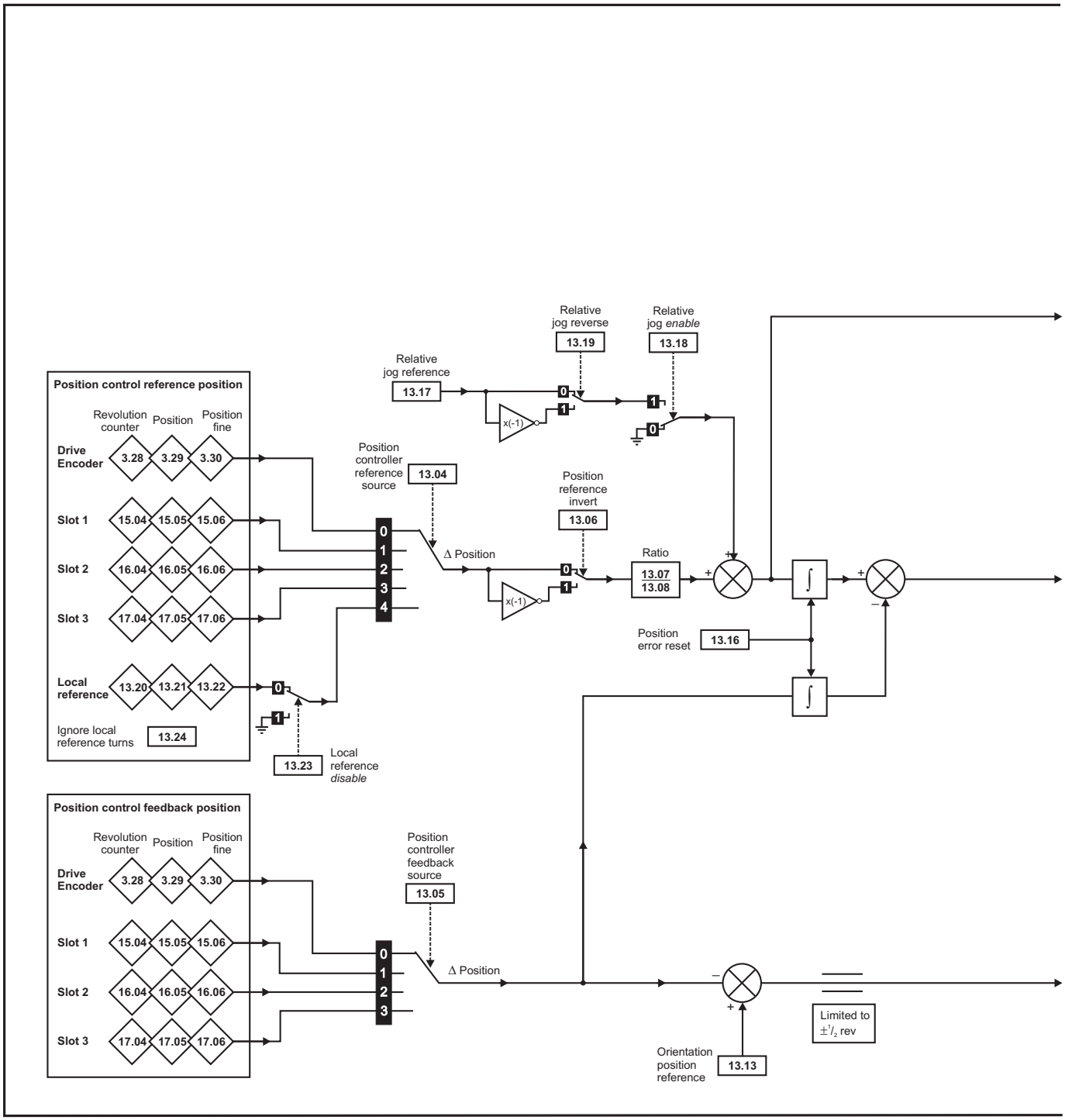

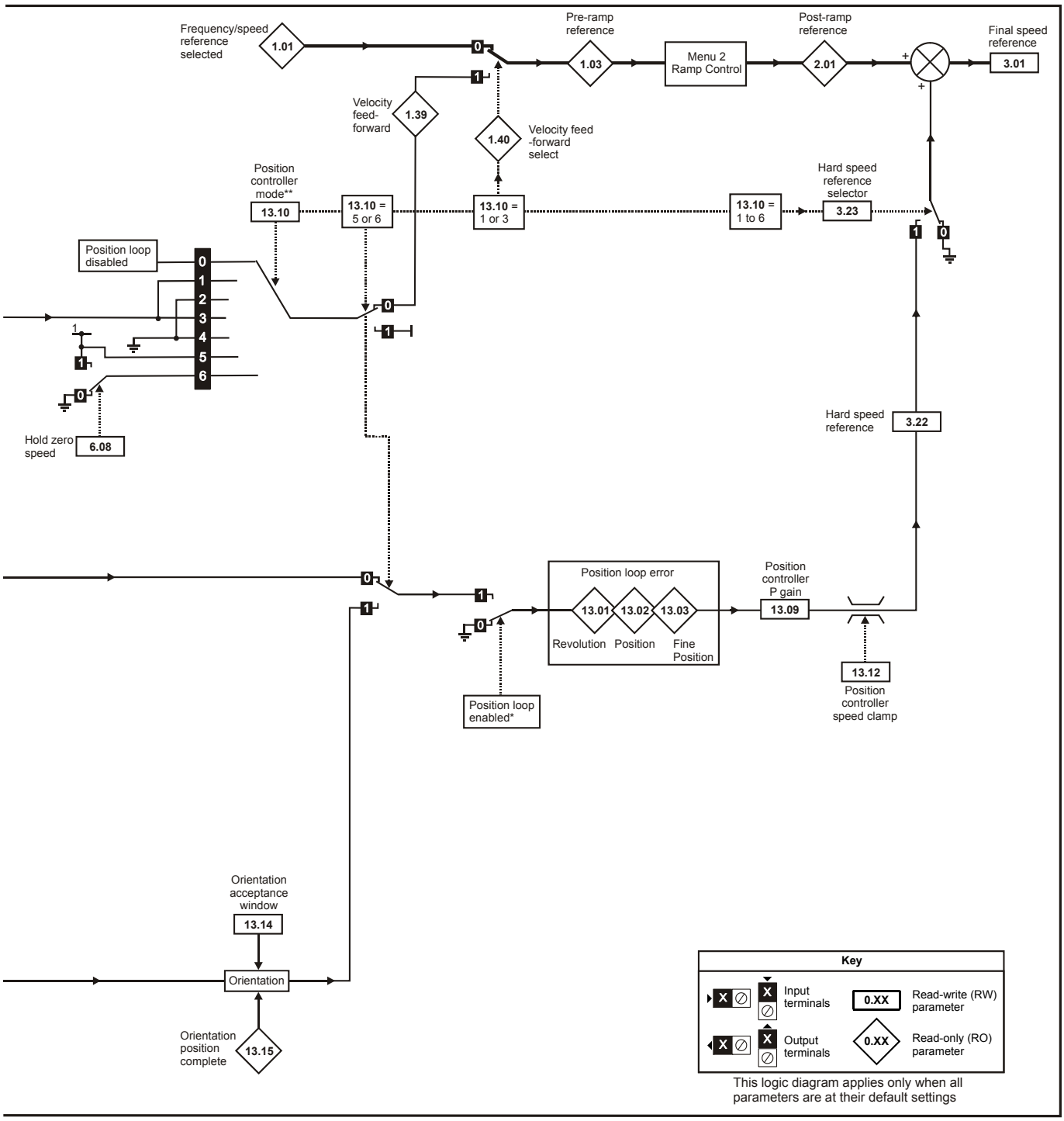

*For more information, refer to section 11.21.9 *Position modes* on page 263.

** The position controller is disabled and the error integrator is also reset under the following conditions:

1. If the drive is disabled (i.e. inhibited, ready or tripped)
2. If the position controller mode (Pr **13.10**) is changed. The position controller is disabled transiently to reset the error integrator.
3. The absolute mode parameter (Pr **13.11**) is changed. The position controller is disabled transiently to reset the error integrator.
4. One of the position sources is invalid.
5. The position feedback initialised parameter (Pr **3.48**) is zero.

Parameter		Range(⇳)		Default(⇨)			Type					
		OL	CL	OL	VT	SV						
13.01	Revolutions error	-32,768 to +32,767					RO	Bi		NC	PT	
13.02	Position error	-32,768 to +32,767					RO	Uni		NC	PT	
13.03	Fine position error	-32,768 to +32,767					RO	Uni		NC	PT	
13.04	Position controller reference source	drv (0), Slot1 (1), Slot2 (2), Slot3 (3), LocAL (4)		drv (0)			RW	Uni				US
13.05	Position controller feedback source	drv (0), Slot1 (1), Slot2 (2), Slot3 (3)		drv (0)			RW	Uni				US
13.06	Position reference invert	OFF (0) or On (1)		OFF (0)			RW	Bit				US
13.07	Ratio numerator	0.000 to 4.000		1.000			RW	Uni				US
13.08	Ratio denominator	0.000 to 1.000		1.000			RW	Uni				US
13.09	Position controller P gain	0.00 to 100.00 rad $s^{-1}/_{rad}$		25.00			RW	Uni				US
13.10	Position controller mode	Position controller disabled (0) Rigid position control - feed fwd (1) Rigid position control (2)	Position controller disabled (0) Rigid position control - feed fwd (1) Rigid position control (2) Non-rigid position control - feed fwd (3) Non-rigid position control (4) Orientation on stop (5) Orientation on stop and when drive enabled (6)	Position controller disabled (0)			RW	Uni				US
13.11	Absolute mode enable	OFF (0) or On (1)		OFF (0)			RW	Bit				US
13.12	Position controller speed clamp	0 to 250		150			RW	Uni				US
13.13	Orientation position reference		0 to 65,535		0		RW	Uni				US
13.14	Orientation acceptance window		0 to 4,096		256		RW	Uni				US
13.15	Orientation position complete		OFF (0) or On (1)				RO	Bit		NC	PT	
13.16	Position error reset	OFF (0) or On (1)		OFF (0)			RW	Bit		NC		
13.17	Relative jog reference	0.0 to 4,000.0 rpm		0.0			RW	Uni		NC		
13.18	Relative jog enable	OFF (0) or On (1)		OFF (0)			RW	Bit		NC		
13.19	Relative jog reverse	OFF (0) or On (1)		OFF (0)			RW	Bit		NC		
13.20	Local reference turns	0 to 65,535		0			RW	Uni		NC		
13.21	Local reference position	0 to 65,535		0			RW	Uni		NC		
13.22	Local reference fine position	0 to 65,535		0			RW	Uni		NC		
13.23	Local reference disable	OFF (0) or On (1)		OFF (0)			RW	Bit		NC		
13.24	Ignore local reference turns	OFF (0) or On (1)		OFF (0)			RW	Bit				US

RW	Read / Write	RO	Read only	Uni	Unipolar	Bi	Bi-polar	Bit	Bit parameter	Txt	Text string		
FI	Filtered	DE	Destination	NC	Not copied	RA	Rating dependent	PT	Protected	US	User save	PS	Power down save

11.14 Menu 14: User PID controller

Figure 11-23 Menu 14 Logic diagram

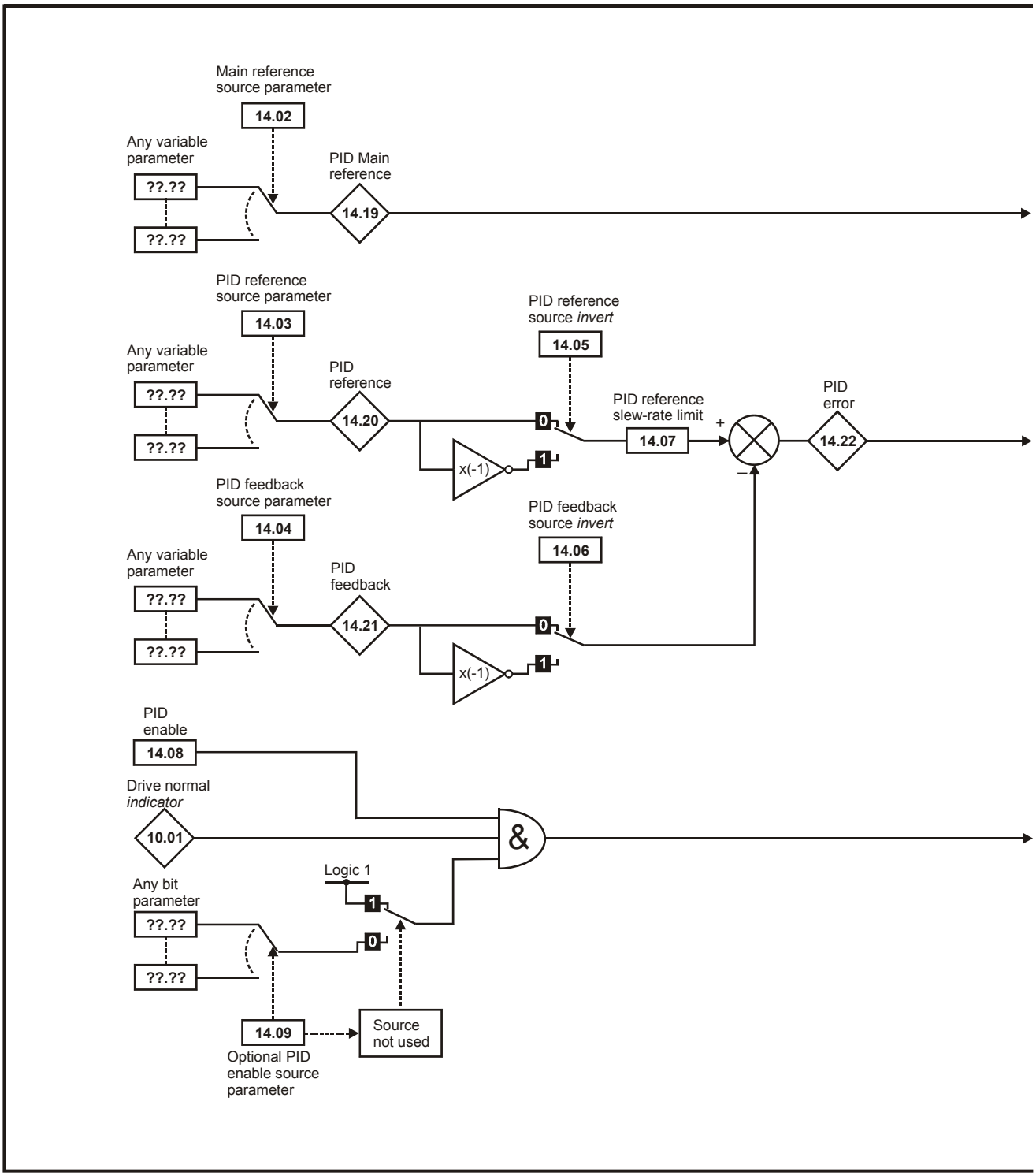

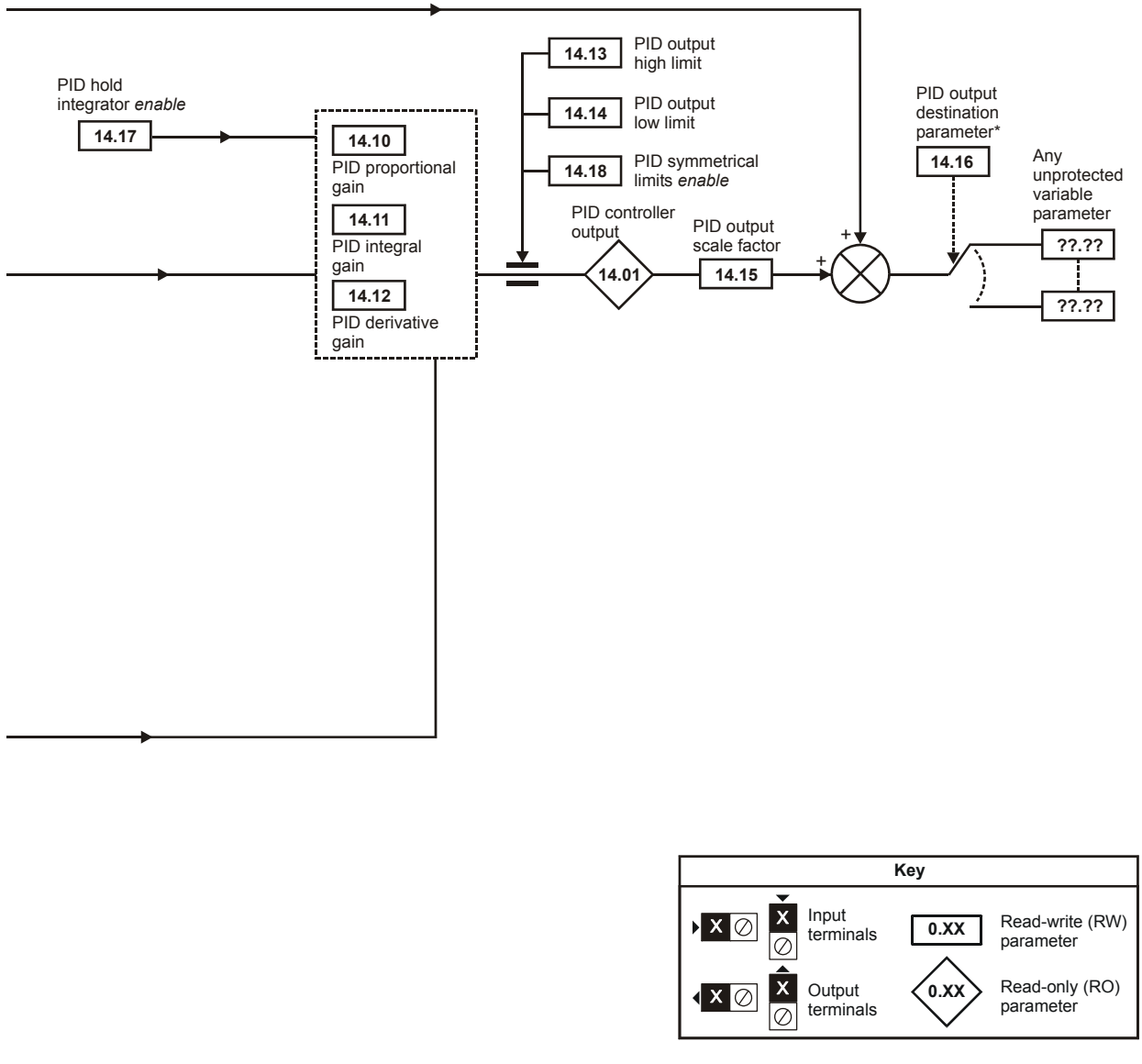

The parameters are all shown at their default settings

Parameter		Range(⇳)		Default(⇨)			Type					
		OL	CL	OL	VT	SV						
14.01	PID control output	±100.00 %					RO	Bi		NC	PT	
14.02	PID main reference source	Pr **0.00** to **21.51**		Pr **0.00**			RW	Uni			PT	US
14.03	PID reference source	Pr **0.00** to **21.51**		Pr **0.00**			RW	Uni			PT	US
14.04	PID feedback source	Pr **0.00** to **21.51**		Pr **0.00**			RW	Uni			PT	US
14.05	PID reference source invert	OFF (0) or On (1)		OFF (0)			RW	Bit				US
14.06	PID feedback source invert	OFF (0) or On (1)		OFF (0)			RW	Bit				US
14.07	PID reference slew-rate limit	0.0 to 3,200.0 s		0.0			RW	Uni				US
14.08	PID enable	OFF (0) or On (1)		OFF (0)			RW	Bit				US
14.09	PID optional enable source	Pr **0.00** to **21.51**		Pr **0.00**			RW	Uni			PT	US
14.10	PID proportional gain	0.000 to 4.000		1.000			RW	Uni				US
14.11	PID integral gain	0.000 to 4.000		0.500			RW	Uni				US
14.12	PID derivative gain	0.000 to 4.000		0.000			RW	Uni				US
14.13	PID upper limit	0.00 to 100.00 %		100.00			RW	Uni				US
14.14	PID lower limit	±100.00 %		-100.00			RW	Bi				US
14.15	PID output scaling factor	0.000 to 4.000		1.000			RW	Uni				US
14.16	PID output destination	Pr **0.00** to **21.51**		Pr **0.00**			RW	Uni	DE		PT	US
14.17	PID hold integrator enable	OFF (0) or On (1)		OFF (0)			RW	Bit		NC		
14.18	PID symmetrical limits enable	OFF (0) or On (1)		OFF (0)			RW	Bit				US
14.19	PID main reference	±100.00 %					RO	Bi		NC	PT	
14.20	PID reference	±100.00 %					RO	Bi		NC	PT	
14.21	PID feedback	±100.00 %					RO	Bi		NC	PT	
14.22	PID error	±100.00 %					RO	Bi		NC	PT	

RW	Read / Write	RO	Read only	Uni	Unipolar	Bi	Bi-polar	Bit	Bit parameter	Txt	Text string		
FI	Filtered	DE	Destination	NC	Not copied	RA	Rating dependent	PT	Protected	US	User save	PS	Power down save

11.15 Menus 15, 16 and 17: Solutions Module set-up

Figure 11-24 Location of Solutions Module slots and their corresponding menu numbers (size 0)

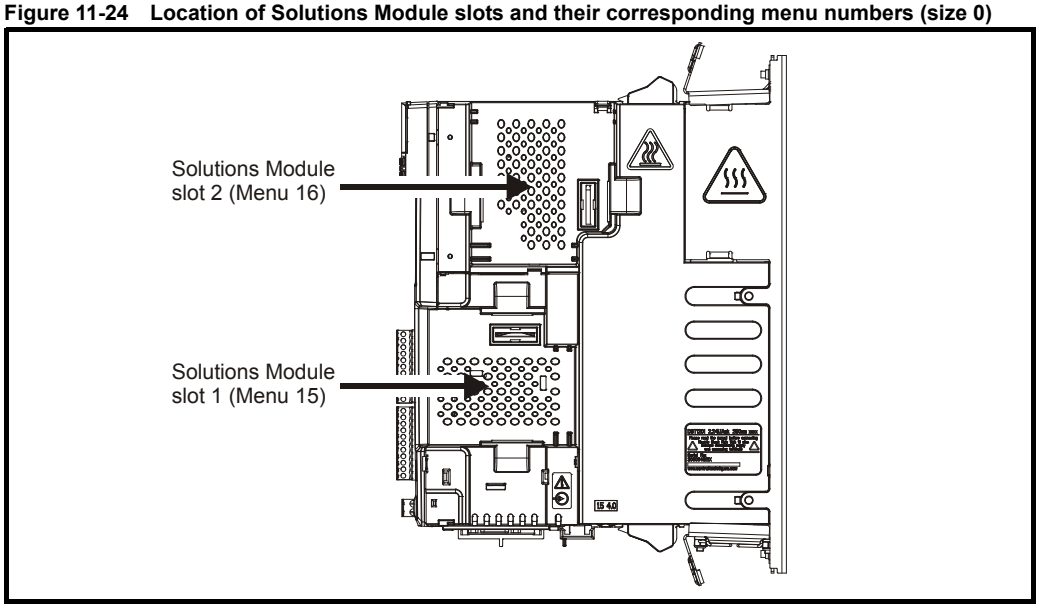

Figure 11-25 Location of Solutions Module slots and their corresponding menu numbers (size 1 to 6)

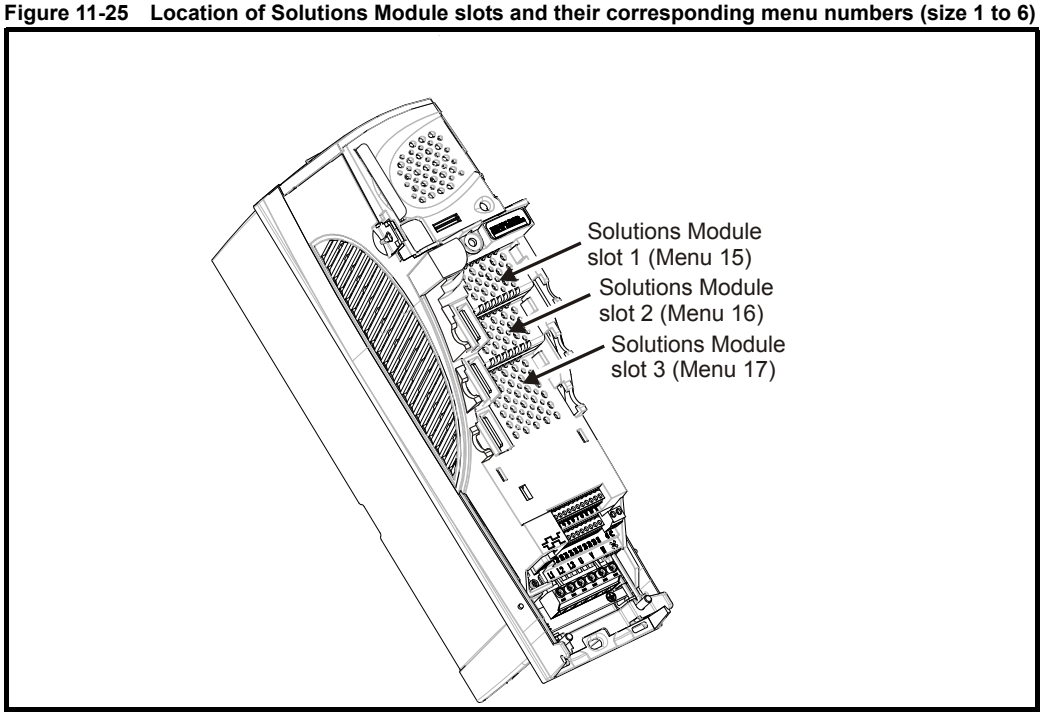

NOTE

Size 0 has two Solution Module slots, and sizes 1 to 6 have three Solution Module slots.

11.15.1 Parameters common to all categories

Parameter		Range(⇳)	Default(⇨)	Type					
x.01	Solutions Module ID	0 to 599		RO	Uni			PT	US
x.02	Solutions Module software version	0.00 to 99.99		RO	Uni		NC	PT	
x.50	Solutions Module error status	0 to 255		RO	Uni		NC	PT	
x.51	Solutions Module software sub-version	0 to 99		RO	Uni		NC	PT	

The Solutions Module ID indicates the type of module that is installed in the corresponding slot.

Solutions Module ID	Module	Category
0	No module installed	
101	SM-Resolver	Feedback
102	SM-Universal Encoder Plus	
104	SM-Encoder Plus / SM-Encoder Output Plus	
201	SM-I/O Plus	Automation (I/O Expansion)
203	SM-I/O Timer	
204	SM-I/O PELV	
205	SM-I/O 24V Protected	
206	SM-I/O 120V	
207	SM-I/O Lite	
208	SM-I/O 32	
301	SM-Applications	Automation (Applications)
302	SM-Applications Lite	
303	SM-EZMotion	
304	SM-Applications Plus	
305	SM-Applications Lite V2	
401	SM-LON	Fieldbus
403	SM-PROFIBUS-DP-V1	
404	SM-INTERBUS	
406	SM-CAN	
407	SM-DeviceNet	
408	SM-CANopen	
409	SM-SERCOS	
410	SM-Ethernet	
421	SM-EtherCAT	
501	SM-SLM	SLM

Solutions Module software

Most Solutions Modules contain software. The software version of the module can be checked by looking at Pr **x.02** and Pr **x.51**.

The software version takes the form of zz.yy.xx, where Pr **x.02** displays zz.yy and Pr **x.51** displays xx. I.e. for software version 01.01.00, Pr **x.02** would display 1.01 and Pr **x.51** would display 0

The SM-Resolver, SM-Encoder Plus, SM-Encoder Output Plus and SM-I/O Plus modules do not contain any software, so Pr **x.02** and Pr **x.51** either show 0 (software V01.07.01 and earlier) or the parameters do not appear (software V01.08.00 and later).

11.15.2 Feedback module category

Figure 11-26 SM-Universal Encoder Plus logic diagram

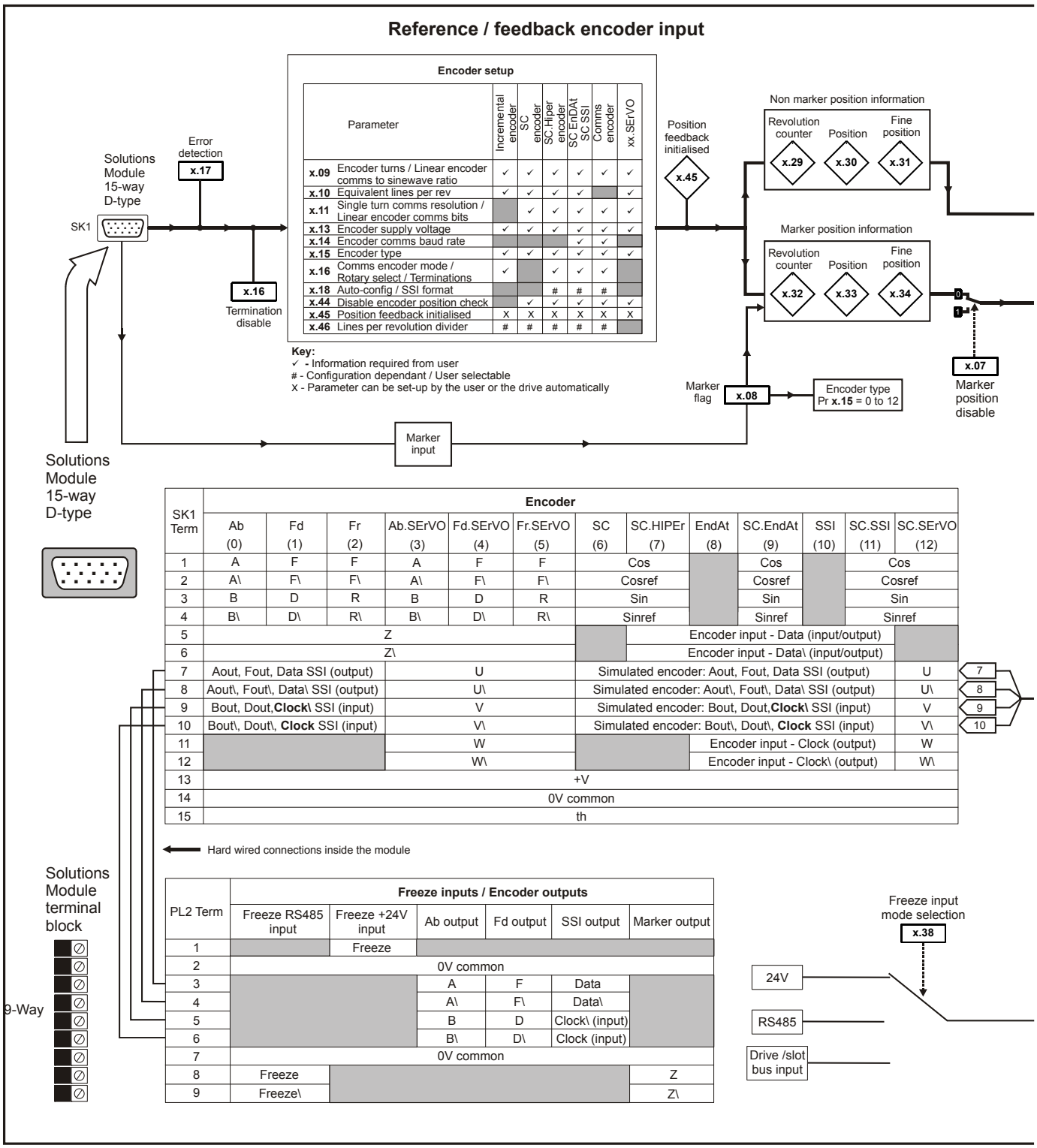

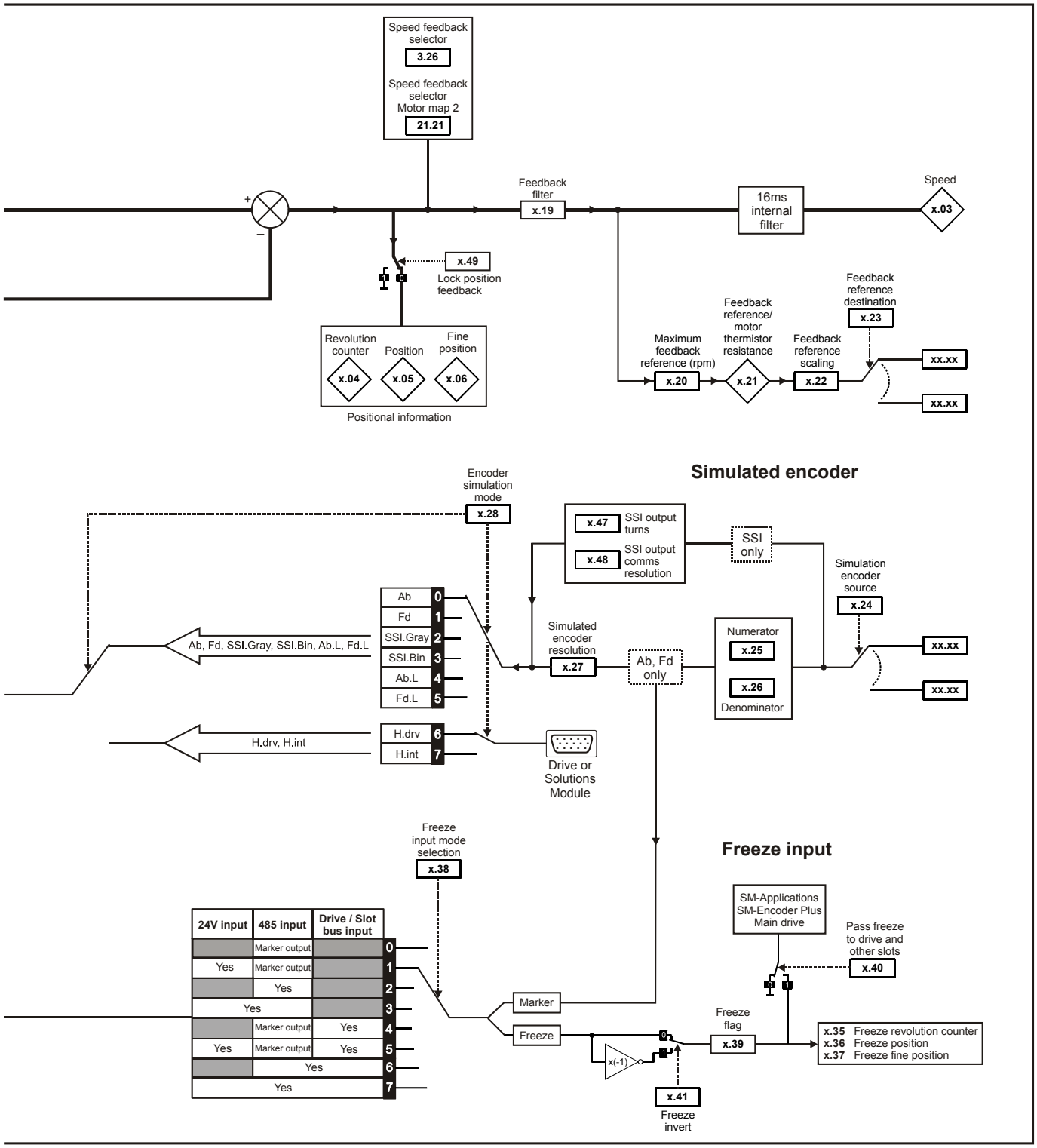
Speed feedback selector
3.26
Speed feedback selector Motor map 2
21.21
Feedback filter
x.19
16ms internal filter
Speed
x.03
x.49
Lock position feedback
Revolution counter
Position
Fine position
x.04
x.05
x.06
Positional information
Feedback reference/ motor thermistor resistance
Maximum feedback reference (rpm)
Feedback reference scaling
Feedback reference destination
x.23
x.20
x.21
x.22
xx.xx
xx.xx
Simulated encoder
Encoder simulation mode
x.28
x.47
SSI output turns
x.48
SSI output comms resolution
SSI only
Simulation encoder source
x.24
Ab
Fd
SSI.Gray
SSI.Bin
Ab.L
Fd.L
0
1
2
3
4
5
Ab, Fd, SSI.Gray, SSI.Bin, Ab.L, Fd.L
Simulated encoder resolution
x.27
Ab, Fd only
Numerator
x.25
x.26
Denominator
xx.xx
xx.xx
H.drv
H.int
6
7
H.drv, H.int
Drive or Solutions Module
Freeze input mode selection
x.38
Freeze input
SM-Applications SM-Encoder Plus Main drive
Pass freeze to drive and other slots
x.40
24V input
485 input
Drive / Slot bus input
Marker output
Yes
Marker
Freeze
x(-1)
Freeze flag
x.39
x.35 Freeze revolution counter
x.36 Freeze position
x.37 Freeze fine position
x.41
Freeze invert

SM-Universal Encoder Plus parameters

	Parameter	Range(⇳)	Default(⇨)	Type					
x.01	Solutions Module ID	0 to 599	102	RO	Uni			PT	US
x.02	Solutions Module software version	0.00 to 99.99		RO	Uni		NC	PT	
x.03	Speed	±40,000.0 rpm		RO	Bi	FI	NC	PT	
x.04	Revolution counter	0 to 65,535 revolutions		RO	Uni	FI	NC	PT	
x.05	Position	0 to 65,535 ($1/2^{16}$ths of a revolution)		RO	Uni	FI	NC	PT	
x.06	Fine position	0 to 65,535 ($1/2^{32}$nds of a revolution)		RO	Uni	FI	NC	PT	
x.07	Marker position reset disable	OFF (0) or On (1)	OFF (0)	RW	Bit				US
x.08	Marker flag	OFF (0) or On (1)	OFF (0)	RW	Bit		NC		
x.09	Encoder turns/ linear encoder comms to sine wave ratio	0 to 16 bits	16	RW	Uni				US
x.10	Equivalent lines per revolution	0 to 50,000	4096	RW	Uni				US
x.11	Single turn comms bits/ linear encoder comms bits	0 to 32 bits	0	RW	Uni				US
x.12	Motor thermistor check *enable*	OFF (0) or On (1)	OFF (0)	RW	Bit				US
x.13	Encoder supply voltage	5V (0), 8V (1), 15V (2)	5V (0)	RW	Uni				US
x.14	Encoder comms baud rate	100 (0), 200 (1), 300 (2), 400 (3), 500 (4), 1,000 (5), 1,500 (6), 2,000 (7)	300 (2)	RW	Txt				US
x.15	Encoder type	Ab (0), Fd (1), Fr (2), Ab.SErVO (3), Fd.SErVO (4), Fr.SErVO (5), SC (6), SC.HiPEr (7), EndAt (8), SC.EndAt (9), SSI (10), SC.SSI (11), SC.UVW (12)	Ab (0)	RW	Uni				US
x.16	Rotary encoder select/ comms only encoder mode/ terminations	0 to 2	1	RW	Uni				US
x.17	Error detection level	0 to 15	1	RW	Uni				US
x.18	Auto configuration/ SSI binary format select	OFF (0) or On (1)	OFF (0)	RW	Bit				US
x.19	Feedback filter	0 to 5 (0 to 16 ms)	0	RW	Uni				US
x.20	Maximum feedback reference	0.0 to 40,000.0 rpm	1500.0	RW	Uni				US
x.21	Feedback reference/ motor thermistor resistance	±100.0 %		RO	Bi		NC	PT	
x.22	Feedback reference scaling	0.000 to 4.000	1.000	RW	Uni				US
x.23	Feedback reference destination	Pr **0.00** to Pr **21.51**	Pr 0.00	RW	Uni	DE		PT	US
x.24	Encoder simulation source	Pr **0.00** to Pr **21.51**	Pr **0.00**	RW	Uni			PT	US
x.25	Encoder simulation ratio numerator	0.0000 to 3.0000	0.2500	RW	Uni				US
x.26	Encoder simulation ratio denominator	0.0000 to 3.0000	1.0000	RW	Uni				US
x.27	Encoder simulation resolution select	OFF (0) or On (1)	OFF (0)	RW	Bit		NC		
x.28	Encoder simulation mode	Ab (0), Fd (1), SSI.Gray (2), SSI.Bin (3), Ab.L (4), Fd.L (5), H-drv (6), H-int (7)	Ab (0)	RW	Txt				US
x.29	Non-marker reset revolution counter	0 to 65,535 revolutions		RO	Uni		NC	PT	
x.30	Non-marker reset position	0 to 65,535 ($1/2^{16}$ths of a revolution)		RO	Uni		NC	PT	
x.31	Non-marker reset fine position	0 to 65,535 ($1/2^{32}$nds of a revolution)		RO	Uni		NC	PT	
x.32	Marker revolution counter	0 to 65,535 revolutions		RO	Uni		NC	PT	
x.33	Marker position	0 to 65,535 ($1/2^{16}$ths of a revolution)		RO	Uni		NC	PT	
x.34	Marker fine position	0 to 65,535 ($1/2^{32}$nds of a revolution)		RO	Uni		NC	PT	
x.35	Freeze revolution counter	0 to 65,535 revolutions		RO	Uni		NC	PT	
x.36	Freeze position	0 to 65,535 ($1/2^{16}$ths of a revolution)		RO	Uni		NC	PT	
x.37	Freeze fine position	0 to 65,535 ($1/2^{32}$nds of a revolution)		RO	Uni		NC	PT	
x.38	Freeze input mode selection	Bit 0 (LSB) = 24V input Bit 1 = EIA485 input Bit 2 (MSB) = From another Solutions Module	1	RW	Uni				US
x.39	Freeze flag	OFF (0) or On (1)	OFF (0)	RW	Bit		NC		
x.40	Pass freeze to drive and other slots	OFF (0) or On (1)	OFF (0)	RW	Bit		NC		US
x.41	Freeze invert	OFF (0) or On (1)	OFF (0)	RW	Bit				US
x.42	Encoder comms transmit register/ Sin signal value	0 to 65,535	0	RW	Uni		NC		
x.43	Encoder comms receive register/ Cos signal value	0 to 65,535	0	RW	Uni		NC		
x.44	Disable encoder position check	OFF (0) or On (1)	OFF (0)	RW	Bit		NC		
x.45	Position feedback initialised	OFF (0) or On (1)		RO	Bit		NC	PT	
x.46	Lines per revolution divider	1 to 1024	1	RW	Uni				US
x.47	SSI output turns	0 to 16 bits	16	RW	Uni				US
x.48	SSI output comms resolution	0 to 32 bits	0	RW	Uni				US
x.49	Lock position feedback	OFF (0) or On (1)	OFF (0)	RW	Bit				
x.50	Solutions Module error status*	0 to 255		RO	Uni		NC	PT	
x.51	Solutions Module software sub-version	0 to 99		RO	Uni		NC	PT	

*See trip SLX.Er, *Feedback module category* on page 292.

Figure 11-27 SM-Resolver logic diagram

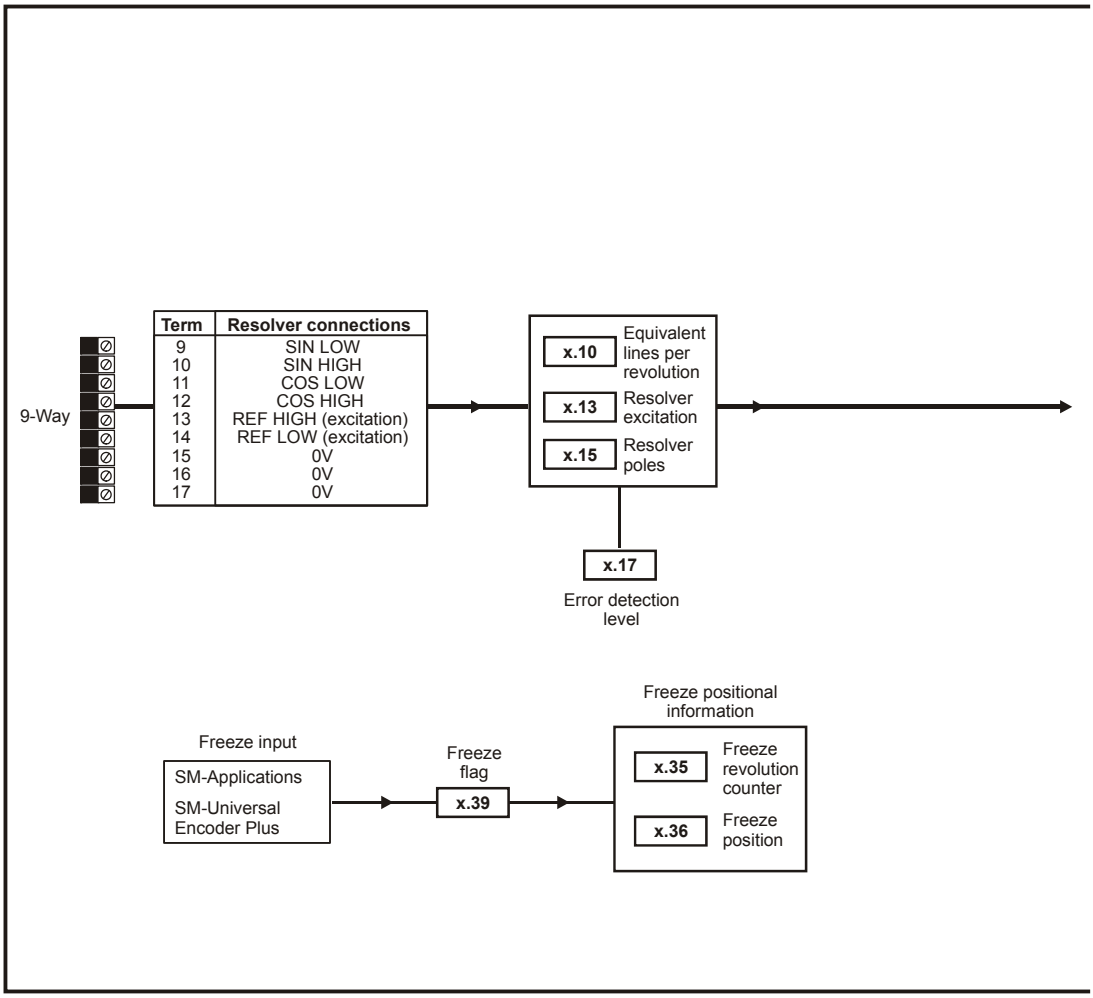

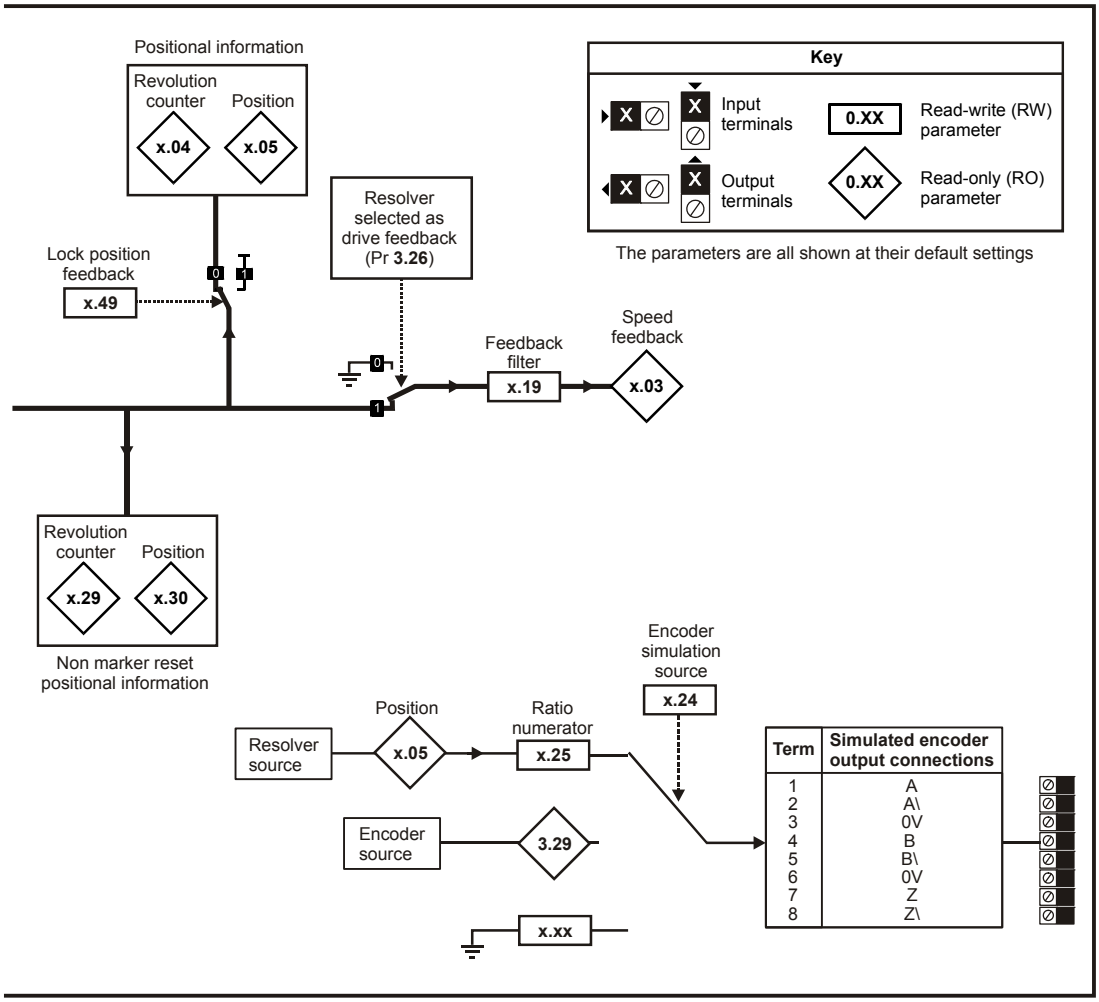

SM-Resolver parameters

	Parameter	Range(⇳)	Default(⇨)	Type					
x.01	Solutions Module ID	0 to 599	101	RO	Uni			PT	US
x.03	Speed	±40,000.0 rpm		RO	Bi	FI	NC	PT	
x.04	Revolution counter	0 to 65,535 revolutions		RO	Uni	FI	NC	PT	
x.05	Position	0 to 65,535 1/2^{16}ths of a revolution		RO	Uni	FI	NC	PT	
x.10	Equivalent lines per revolution	0 to 50,000	4096	RW	Uni				US
x.13	Resolver excitation	3:1 (0), 2:1 (1 or 2)	3:1 (0)	RW	Uni				US
x.15	Resolver poles	2 pole (0), 4 pole (1), 6 pole (2), 8 pole (3 to 12)	2 pole (0)	RW	Uni				US
x.17	Error detection level	Bit 0 (LSB) = Wire break detect Bit 1 = Not used Bit 2 (MSB) = Not used	1	RW	Uni				US
x.19	Feedback filter	0 (0), 1 (1), 2 (2), 4 (3), 8 (4), 16 (5) ms	0	RW	Txt				US
x.24	Encoder simulation source	Pr **0.00** to Pr **21.51**	Pr **0.00**	RW	Uni			PT	US
x.25	Encoder simulation ratio numerator	0.0000 to 3.0000	0.25	RW	Uni				US
x.29	Non-marker reset revolution counter	0 to 65,535 revolutions		RO	Uni		NC	PT	
x.30	Non-marker reset position	0 to 65,535 1/2^{16}ths of a revolution		RO	Uni		NC	PT	
x.35	Freeze revolution counter	0 to 65,535 revolutions		RO	Uni		NC	PT	
x.36	Freeze position	0 to 65,535 1/2^{16}ths of a revolution		RO	Uni		NC	PT	
x.39	Freeze flag	OFF (0) or On (1)	OFF (0)	RW	Bit		NC		
x.45	Position feedback initialized	OFF (0) or On (1)		RO	Bit		NC	PT	
x.49	Lock position feedback	OFF (0) or On (1)	OFF (0)	RW	Bit		NC		
x.50	Solutions Module error status*	0 to 255		RO	Uni		NC	PT	

RW	Read / Write	RO	Read only	Uni	Unipolar	Bi	Bi-polar	Bit	Bit parameter	Txt	Text string		
FI	Filtered	DE	Destination	NC	Not copied	RA	Rating dependent	PT	Protected	US	User save	PS	Power down save

*See trip SLX.Er, *Feedback module category* on page 292.

Figure 11-28 SM-Encoder Plus logic diagram

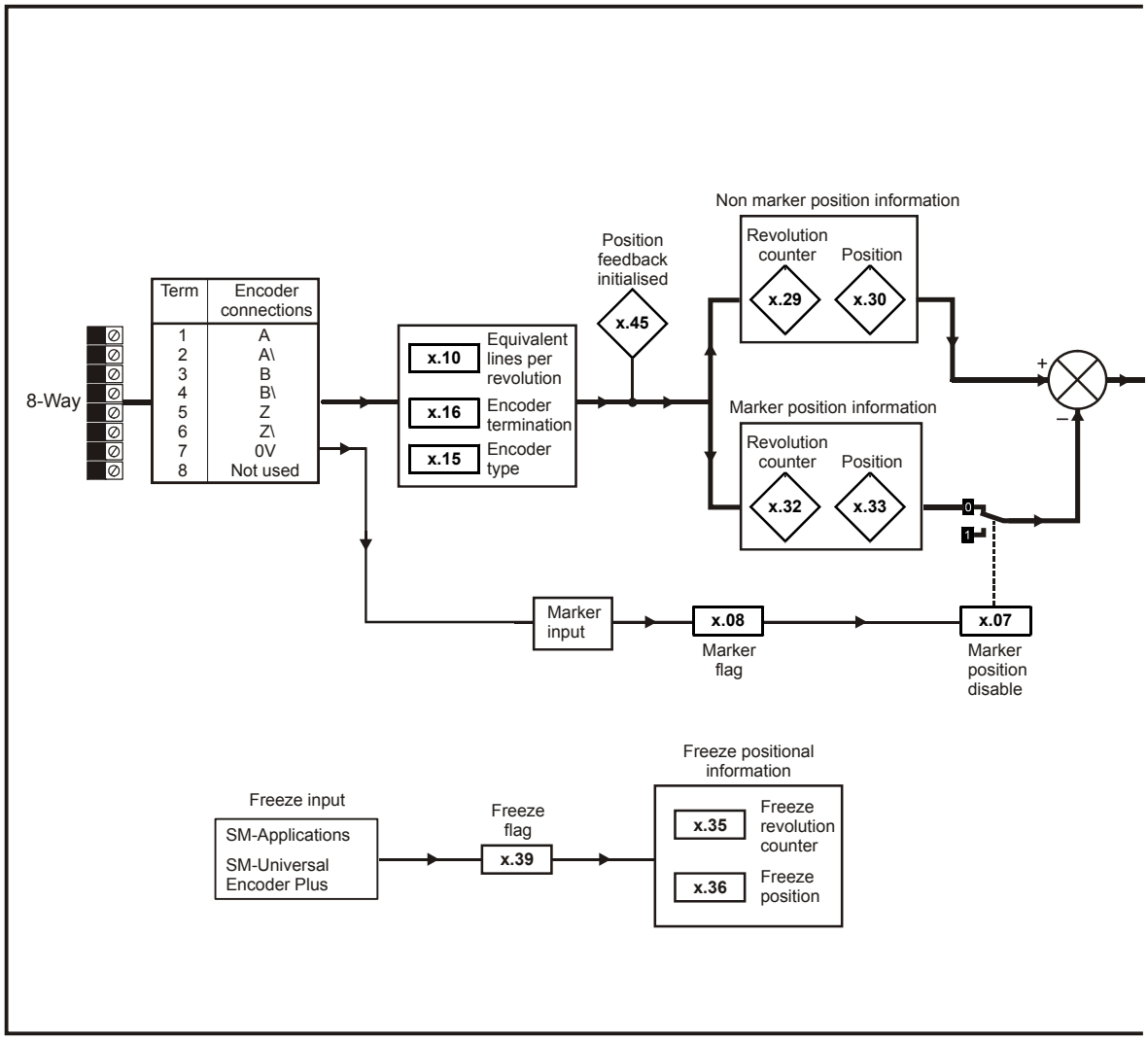

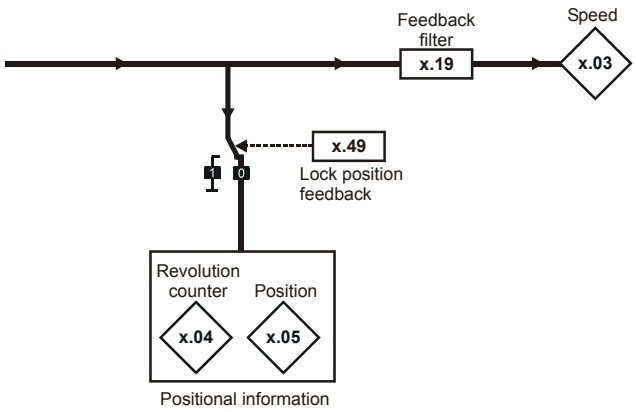

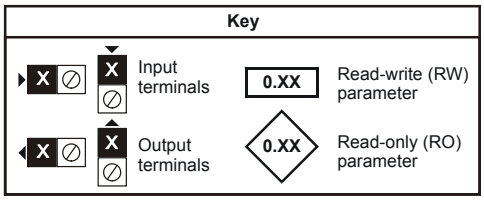

The parameters are all shown at their default settings

Figure 11-29 SM-Encoder Output Plus logic diagram

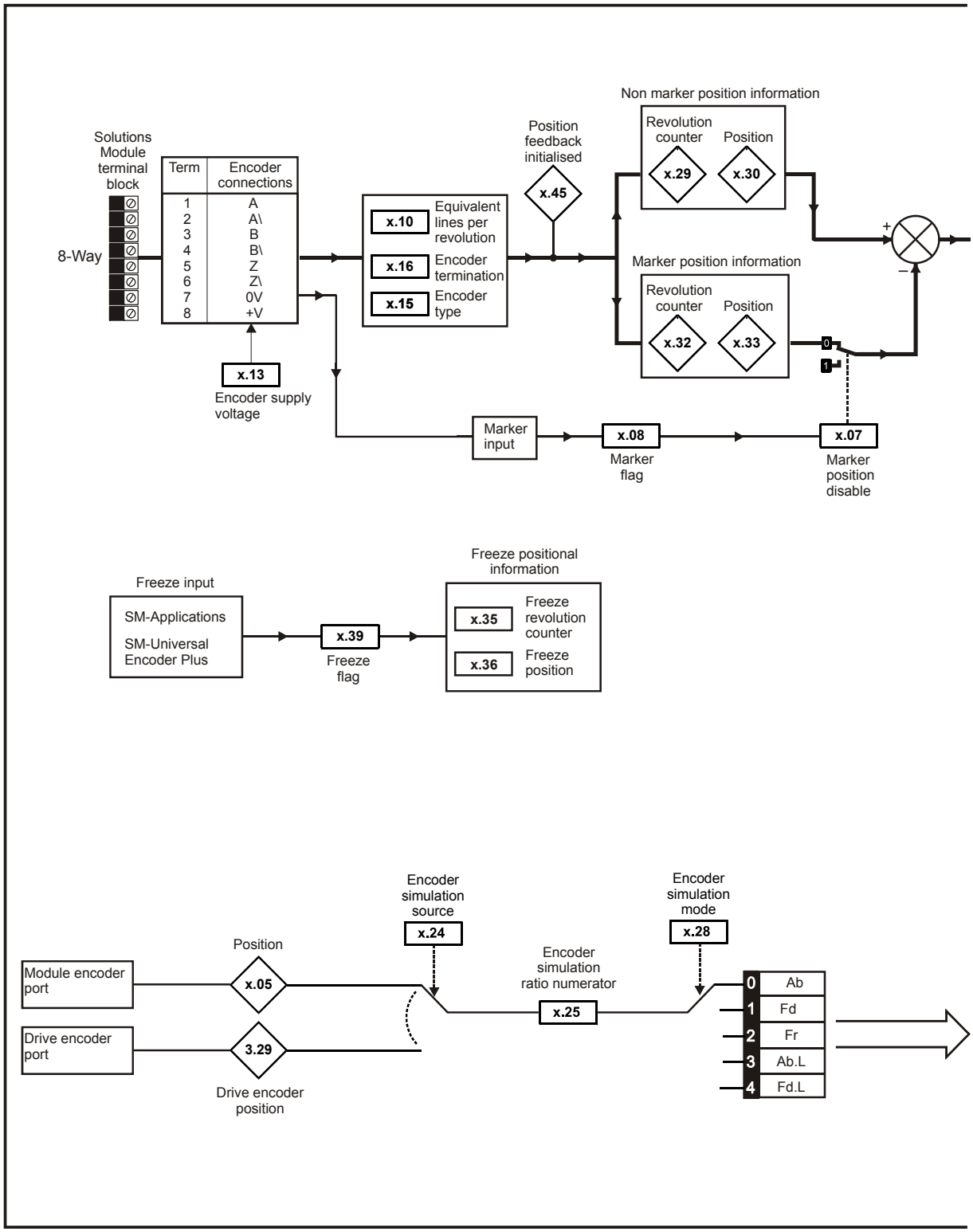

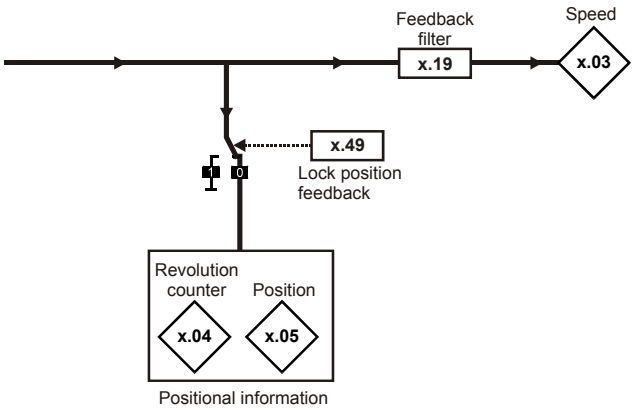

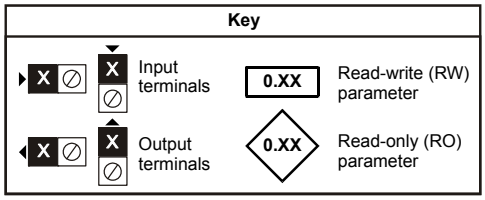

The parameters are all shown at their default settings

Ab	Fd	Fr	Ab.L	Fd.L	PL2 term
0V					1
0V					2
A	F	F	A	F	3
A\	F\	F\	A\	F\	4
B	D	R\	B	D	5
B\	D\	R\	B\	D\	6
0V					7
Z					8
Z\					9

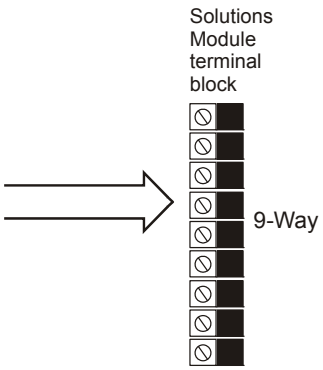

SM-Encoder Plus / SM-Encoder Output Plus parameters

Parameter		Range(⇳)	Default(⇨)	Type					
x.01	Solutions Module ID	0 to 599	104	RO	Uni			PT	US
x.03	Speed feedback	±40,000.0 rpm		RO	Bi	FI	NC	PT	
x.04	Revolution counter	0 to 65,535 revolutions		RO	Uni	FI	NC	PT	
x.05	Position	0 to 65,535 ($1/2^{16}$ths of a revolution)		RO	Uni	FI	NC	PT	
x.07	Marker position reset disable	OFF (0) or On (1)	OFF (0)	RW	Bit				US
x.08	Marker flag	OFF (0) or On (1)	OFF (0)	RW	Bit		NC		
x.10	Equivalent lines per revolution	0 to 50,000	4,096	RW	Uni				US
x.13*	Encoder supply voltage	0: 5V, 1: 8V, 2: 15V	0	RW	Uni				US
x.15	Encoder type	Ab (0), Fd (1), Fr (2 to 12)	Ab (0)	RW	Uni				US
x.16	Encoder termination	0 to 2	1	RW	Bit				US
x.19	Feedback filter	0 to 5 (0 to 16 ms)	0	RW	Uni				US
x.24*	Encoder simulation source	Pr **0.00** to Pr **21.51**	0.00	RW	Uni			PT	US
x.25*	Encoder simulation ratio numerator	0.0000 to 3.0000	0.2500	RW	Uni				US
x.28*	Encoder simulation mode	0: Ab, 1: Fd, 2: Fr, 3: Ab with marker lock, 4 to 7: Fd with marker lock	0	RW	Uni				US
x.29	Non-marker reset revolution counter	0 to 65,535 revolutions		RO	Uni		NC	PT	
x.30	Non-marker reset position	0 to 65,535 ($1/2^{16}$ths of a revolution)		RO	Uni		NC	PT	
x.32	Marker revolution counter	0 to 65,535 revolutions		RO	Uni		NC	PT	
x.33	Marker position	0 to 65,535 ($1/2^{16}$ths of a revolution)		RO	Uni		NC	PT	
x.35	Freeze revolution counter	0 to 65,535 revolutions		RO	Uni		NC	PT	
x.36	Freeze position	0 to 65,535 ($1/2^{16}$ths of a revolution)		RO	Uni		NC	PT	
x.39	Freeze flag	OFF (0) or On (1)	OFF (0)	RW	Bit		NC		
x.45	Position feedback initialized	OFF (0) or On (1)		RO	Bit		NC	PT	
x.49	Lock position feedback	OFF (0) or On (1)		RW	Bit				
x.50	Solutions Module error status**	0 to 255		RO	Uni		NC	PT	

RW	Read / Write	RO	Read only	Uni	Unipolar	Bi	Bi-polar	Bit	Bit parameter	Txt	Text string		
FI	Filtered	DE	Destination	NC	Not copied	RA	Rating dependent	PT	Protected	US	User save	PS	Power down save

*Pr **x.13**, Pr **x.24**, Pr **x.25** and Pr **x.28** are only used when operating with a SM-Encoder Output Plus module. These parameters are not used when operating with a SM-Encoder Plus module

**See trip SLX.Er, *Feedback module category* on page 292.

11.15.3 Automation module category

Figure 11-30 SM-I/O Plus analog logic diagram

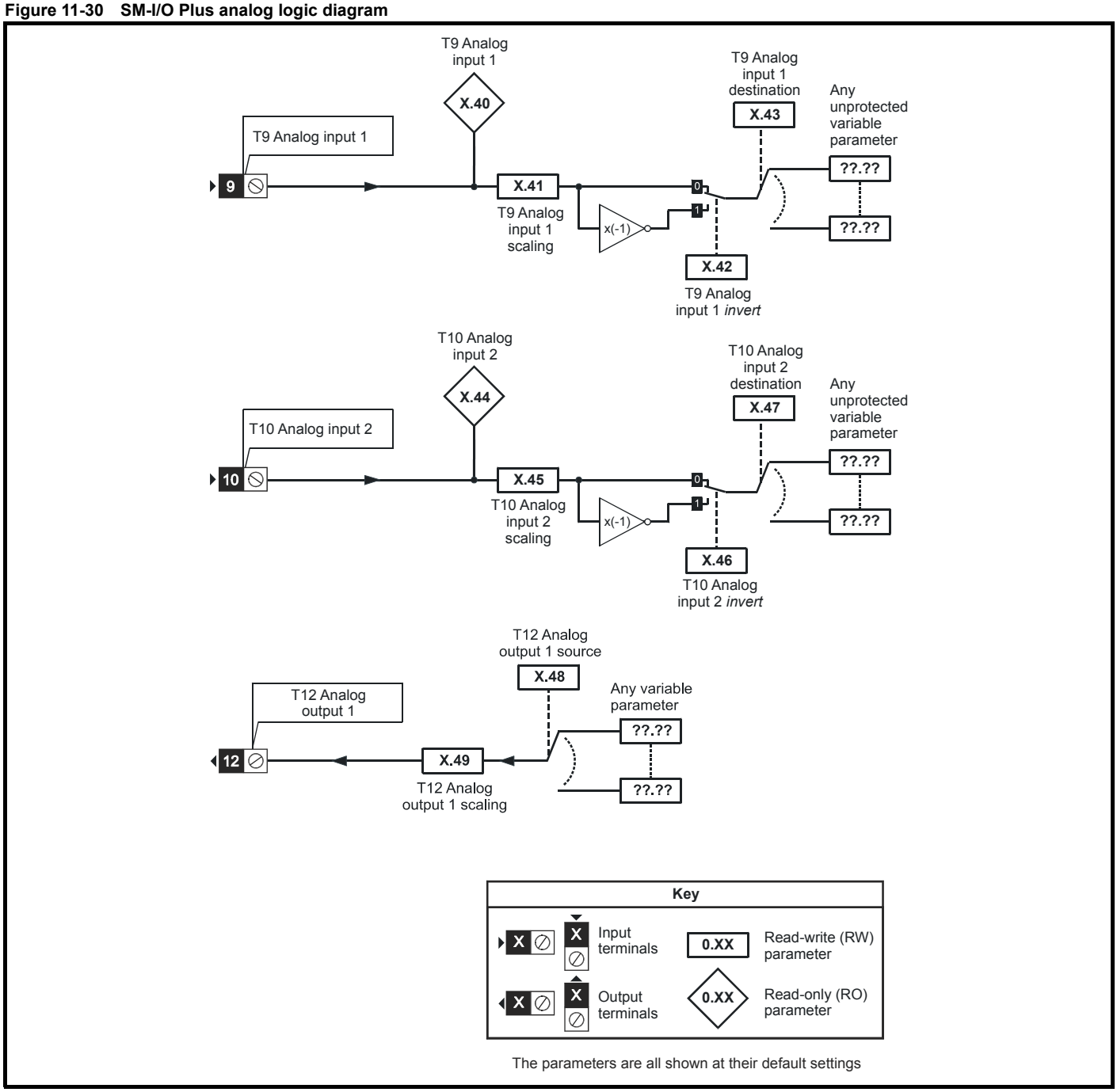

The parameters are all shown at their default settings

Figure 11-31 SM-I/O Plus digital logic diagram 1

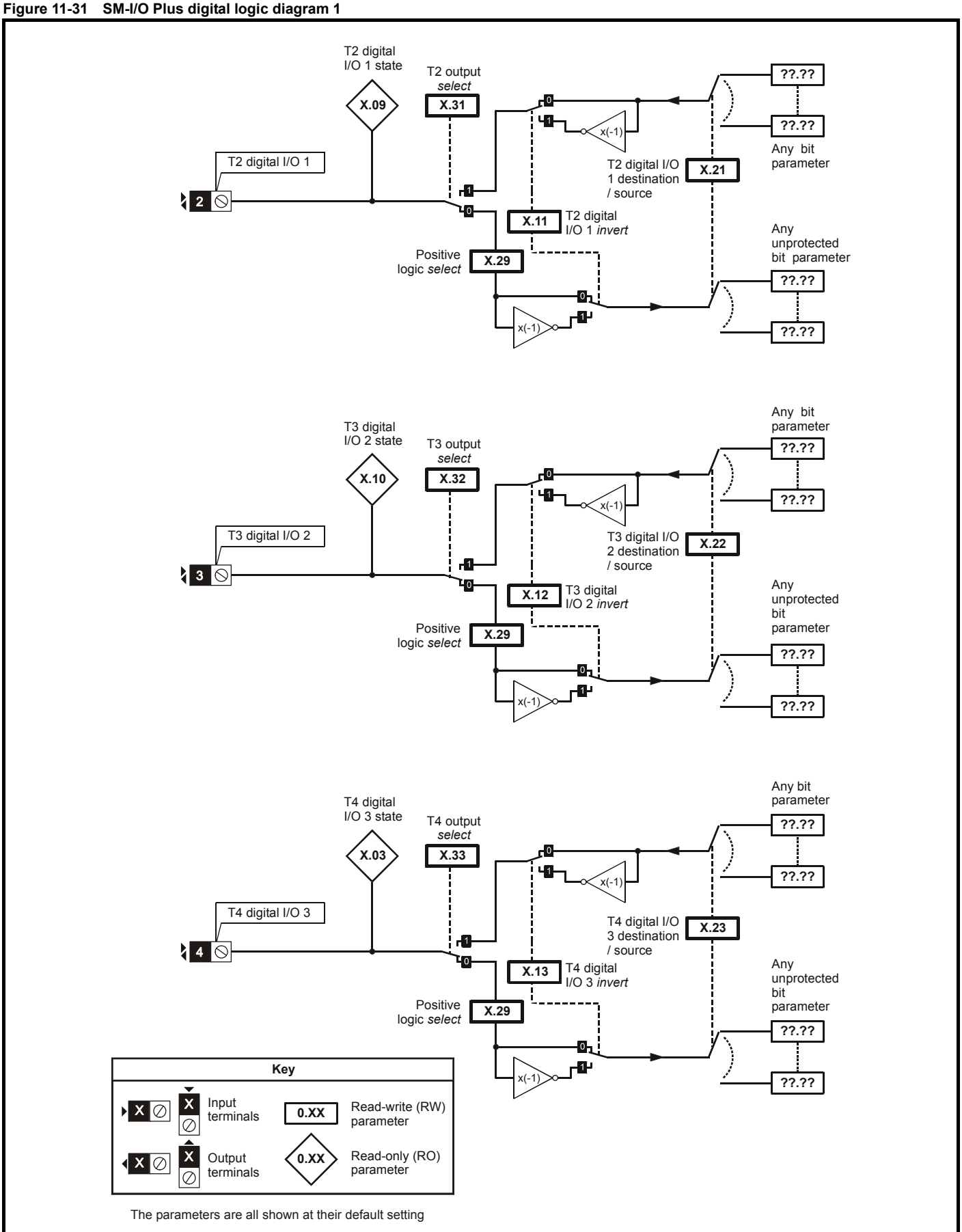

The parameters are all shown at their default setting

Figure 11-32 SM-I/O Plus digital logic diagram 2

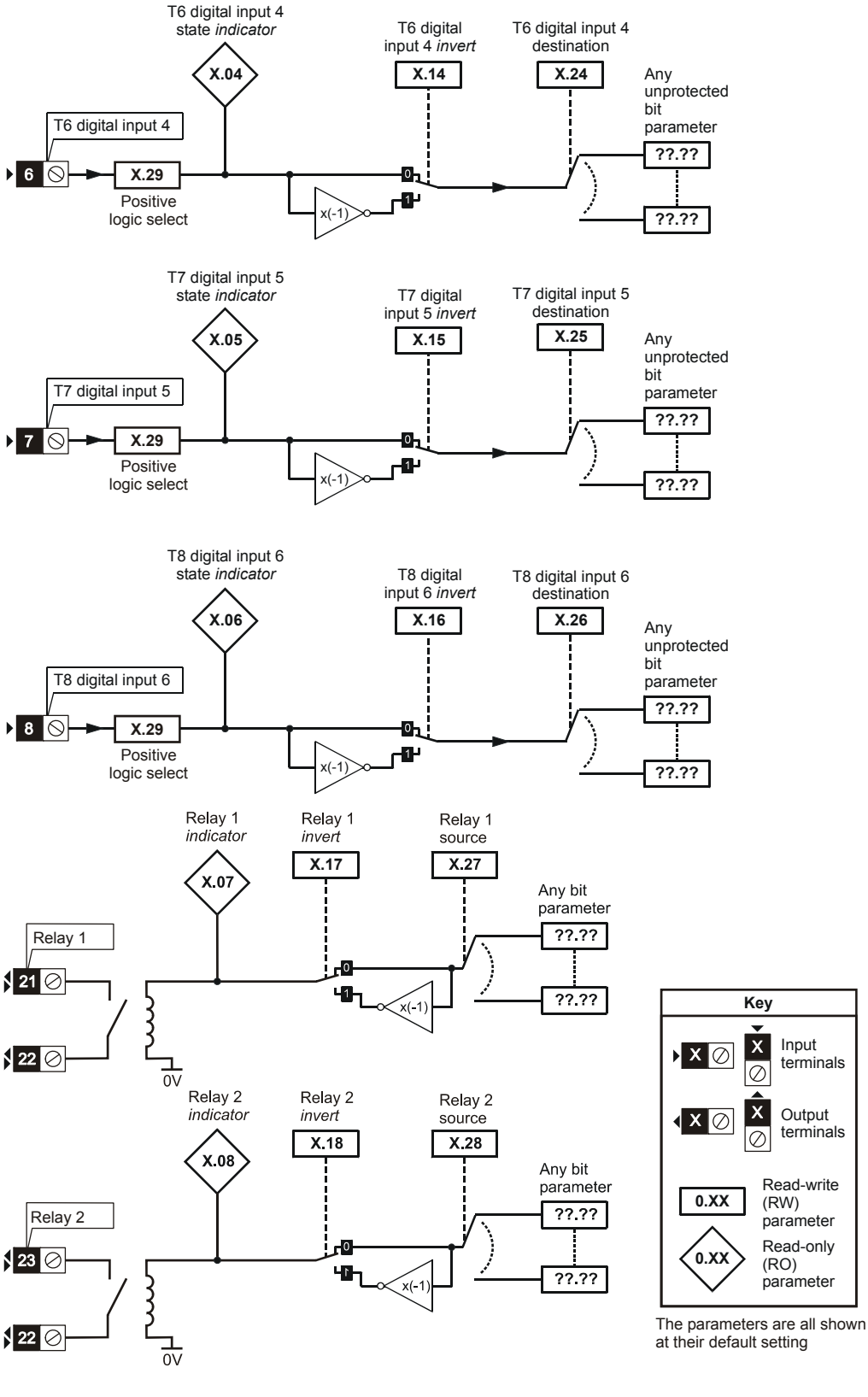

SM-I/O Plus parameters

Parameter		Range(⇳)	Default(⇨)	Type					
x.01	Solutions Module ID	0 to 599	201	RO	Uni			PT	US
x.03	T4 digital I/O 3 state	OFF (0) or On (1)		RO	Bit		NC	PT	
x.04	T6 digital input 4 state	OFF (0) or On (1)		RO	Bit		NC	PT	
x.05	T7 digital input 5 state	OFF (0) or On (1)		RO	Bit		NC	PT	
x.06	T8 digital input 6 state	OFF (0) or On (1)		RO	Bit		NC	PT	
x.07	Relay 1 state	OFF (0) or On (1)		RO	Bit		NC	PT	
x.08	Relay 2 state	OFF (0) or On (1)		RO	Bit		NC	PT	
x.09	T2 digital I/O 1 state	OFF (0) or On (1)		RO	Bit		NC	PT	
x.10	T3 digital I/O 2 state	OFF (0) or On (1)		RO	Bit		NC	PT	
x.11	T2 digital I/O 1 invert	OFF (0) or On (1)	OFF (0)	RW	Bit				US
x.12	T3 digital I/O 2 invert	OFF (0) or On (1)	OFF (0)	RW	Bit				US
x.13	T4 digital I/O 3 invert	OFF (0) or On (1)	OFF (0)	RW	Bit				US
x.14	T6 digital input 4 invert	OFF (0) or On (1)	OFF (0)	RW	Bit				US
x.15	T7 digital input 5 invert	OFF (0) or On (1)	OFF (0)	RW	Bit				US
x.16	T8 digital input 6 invert	OFF (0) or On (1)	OFF (0)	RW	Bit				US
x.17	Relay 1 invert	OFF (0) or On (1)	OFF (0)	RW	Bit				US
x.18	Relay 2 invert	OFF (0) or On (1)	OFF (0)	RW	Bit				US
x.20	Digital I/O read word	0 to 511		RO	Uni		NC	PT	
x.21	T2 digital I/O 1 source/ destination	Pr **0.00** to Pr **21.51**	Pr **0.00**	RW	Uni	DE		PT	US
x.22	T3 digital I/O 2 source/ destination	Pr **0.00** to Pr **21.51**	Pr **0.00**	RW	Uni	DE		PT	US
x.23	T4 digital I/O 3 source/ destination	Pr **0.00** to Pr **21.51**	Pr **0.00**	RW	Uni	DE		PT	US
x.24	T6 digital input 4 destination	Pr **0.00** to Pr **21.51**	Pr **0.00**	RW	Uni	DE		PT	US
x.25	T7 digital input 5 destination	Pr **0.00** to Pr **21.51**	Pr **0.00**	RW	Uni	DE		PT	US
x.26	T8 digital input 6 destination	Pr **0.00** to Pr **21.51**	Pr **0.00**	RW	Uni	DE		PT	US
x.27	Relay 1 source	Pr **0.00** to Pr **21.51**	Pr **0.00**	RW	Uni			PT	US
x.28	Relay 2 source	Pr **0.00** to Pr **21.51**	Pr **0.00**	RW	Uni			PT	US
x.29	Input polarity select	OFF (0) or On (1)	On (1) (positive logic)	RW	Bit			PT	US
x.31	T2 digital I/O 1 output select	OFF (0) or On (1)	OFF (0)	RW	Bit				US
x.32	T3 digital I/O 2 output select	OFF (0) or On (1)	OFF (0)	RW	Bit				US
x.33	T4 digital I/O 3 output select	OFF (0) or On (1)	OFF (0)	RW	Bit				US
x.40	Analog input 1	±100.0%		RO	Bi		NC	PT	
x.41	Analog input 1 scaling	0 to 4.000	1.000	RW	Uni				US
x.42	Analog input 1 invert	OFF (0) or On (1)	OFF (0)	RW	Bit				US
x.43	Analog input 1 destination	Pr **0.00** to Pr **21.51**	Pr **0.00**	RW	Uni	DE		PT	US
x.44	Analog input 2	±100.0%		RO	Bi		NC	PT	
x.45	Analog input 2 scaling	0.000 to 4.000	1.000	RW	Uni				US
x.46	Analog input 2 invert	OFF (0) or On (1)	OFF (0)	RW	Bit				US
x.47	Analog input 2 destination	Pr **0.00** to Pr **21.51**	Pr **0.00**	RW	Uni	DE		PT	US
x.48	Analog output 1 source	Pr **0.00** to Pr **21.51**	Pr **0.00**	RW	Uni			PT	US
x.49	Analog output 1 scaling	0.000 to 4.000	1.000	RW	Uni				US
x.50	Solutions Module error status*	0 to 255		RO	Uni		NC	PT	

RW	Read / Write	RO	Read only	Uni	Unipolar	Bi	Bi-polar	Bit	Bit parameter	Txt	Text string		
FI	Filtered	DE	Destination	NC	Not copied	RA	Rating dependent	PT	Protected	US	User save	PS	Power down save

*See trip SLX.Er, *Automation (I/O Expansion) module category* on page 294.

Figure 11-33 SM-I/O Lite & SM-I/O Timer digital I/O logic diagram

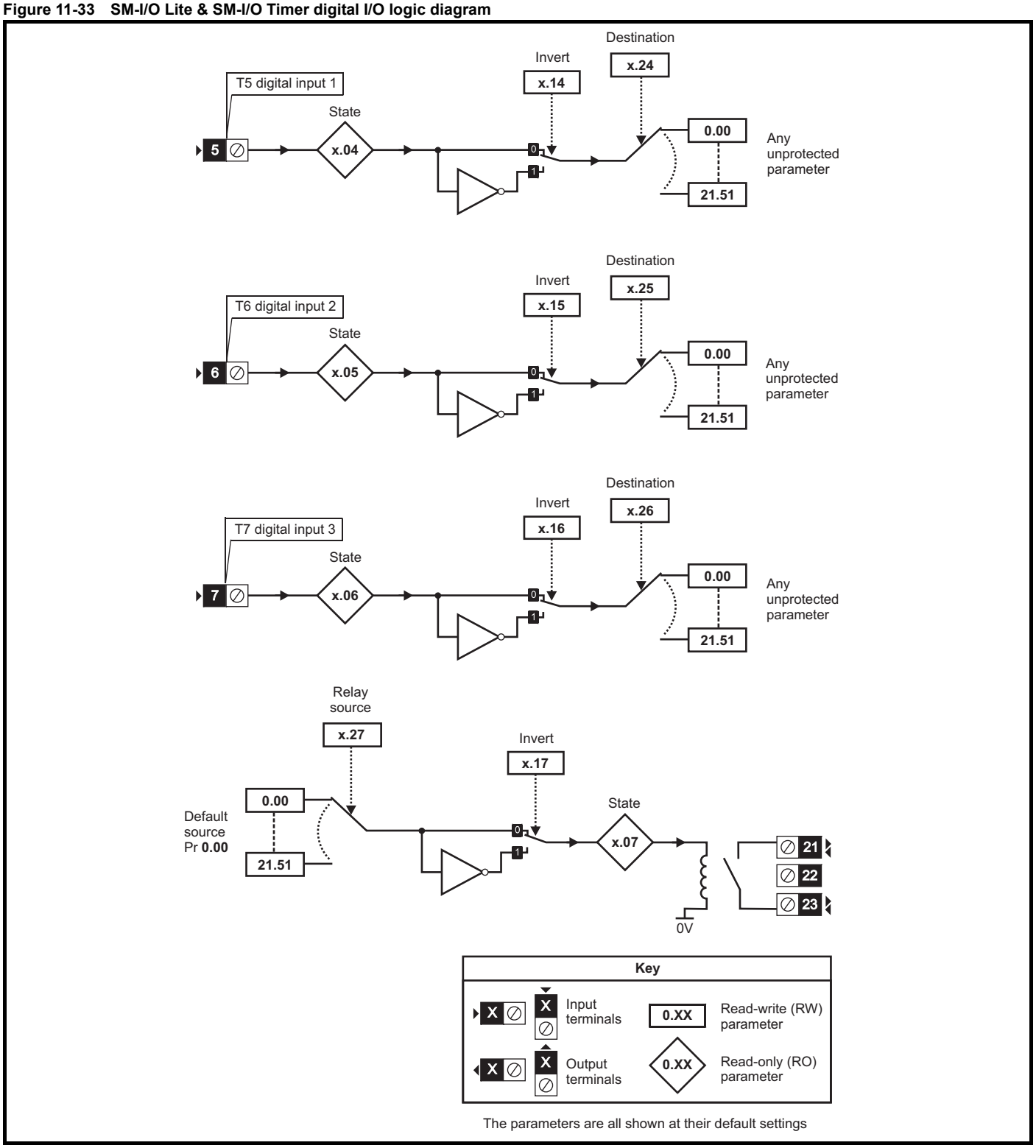

The parameters are all shown at their default settings

Figure 11-34 SM-I/O Lite & SM-I/O Timer analog I/O logic diagram

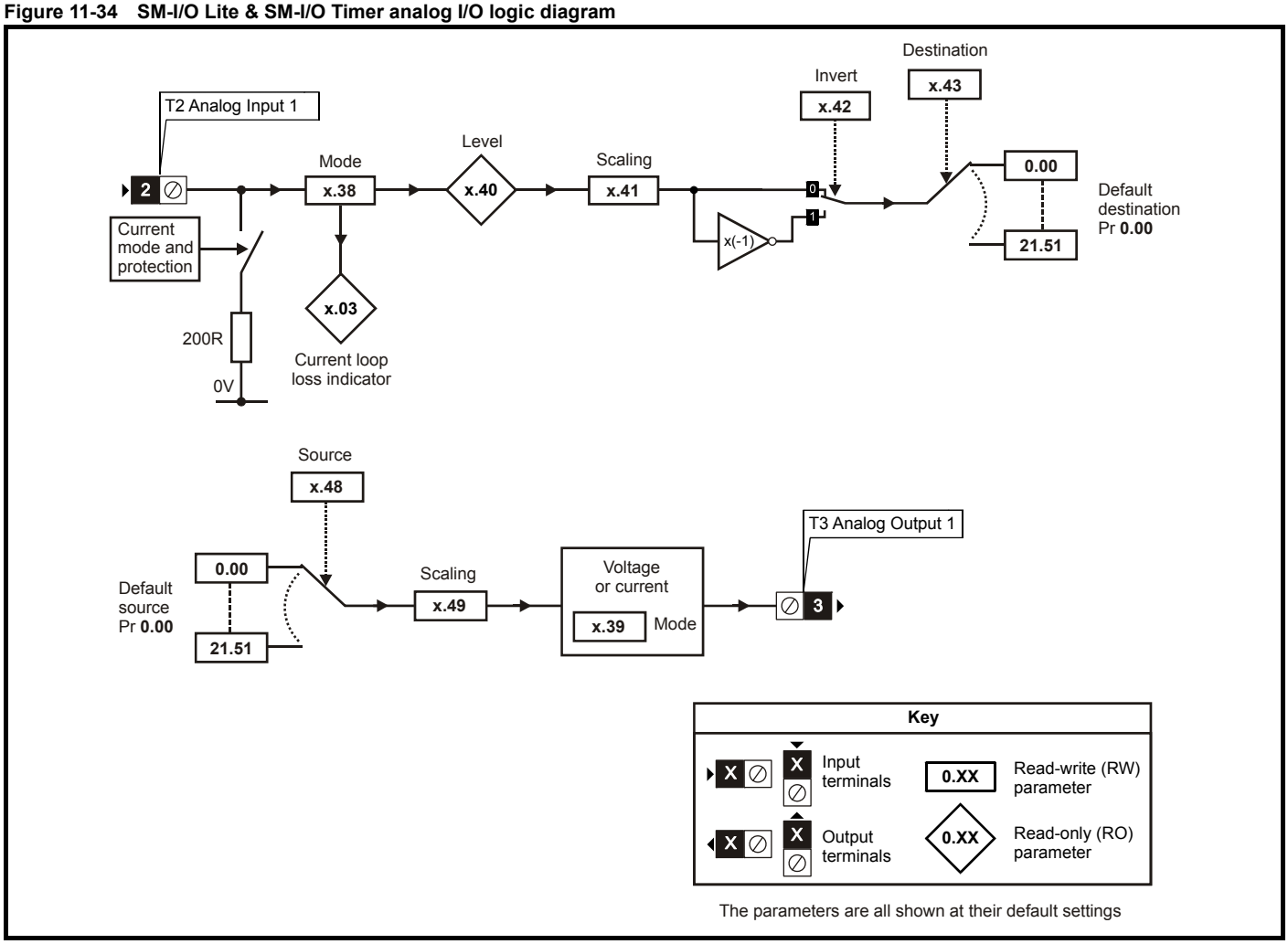

Figure 11-35 SM-I/O Timer real time clock logic diagram

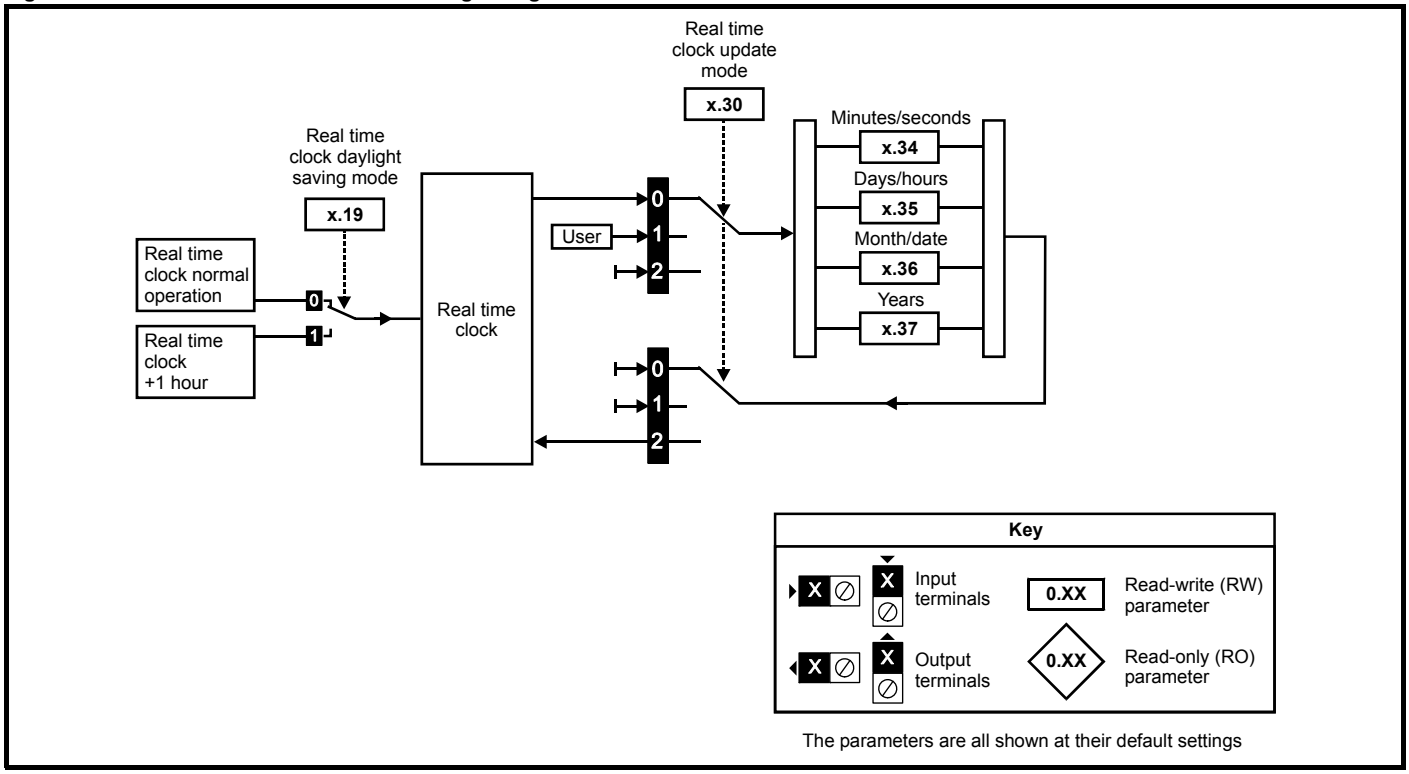

SM-I/O Timer & SM-I/O Lite parameters

Parameter		Range(⇳)	Default(⇨)	Type						SM-I/O	
										Lite	Timer
x.01	Solutions Module ID	0 to 599	SM-I/O Timer: 203 SM-I/O Lite: 207	RO	Uni			PT	US	✓	✓
x.02	Solutions Module software version	0.00 to 99.99		RO	Uni		NC	PT		✓	✓
x.03	Current loop loss indicator	OFF (0) or On (1)		RO	Bit		NC	PT		✓	✓
x.04	T5 digital input 1 state	OFF (0) or On (1)		RO	Bit		NC	PT		✓	✓
x.05	T6 digital input 2 state	OFF (0) or On (1)		RO	Bit		NC	PT		✓	✓
x.06	T7 digital input 3 state	OFF (0) or On (1)		RO	Bit		NC	PT		✓	✓
x.07	Relay 1 state	OFF (0) or On (1)		RO	Bit		NC	PT		✓	✓
x.14	T5 digital input 1 invert	OFF (0) or On (1)	OFF (0)	RW	Bit				US	✓	✓
x.15	T6 digital input 2 invert	OFF (0) or On (1)	OFF (0)	RW	Bit				US	✓	✓
x.16	T7 digital input 3 invert	OFF (0) or On (1)	OFF (0)	RW	Bit				US	✓	✓
x.17	Relay 1 invert	OFF (0) or On (1)	OFF (0)	RW	Bit				US	✓	✓
x.19	Real time clock daylight saving mode	OFF (0) or On (1)	OFF (0)	RW	Bit				US		✓
x.20	Digital I/O read word	0 to 255		RO	Uni		NC	PT		✓	✓
x.24	T5 digital input 1 destination	Pr **0.00** to Pr **21.51**	Pr **0.00**	RW	Uni	DE		PT	US	✓	✓
x.25	T6 digital input 2 destination	Pr **0.00** to Pr **21.51**	Pr **0.00**	RW	Uni	DE		PT	US	✓	✓
x.26	T7 digital input 3 destination	Pr **0.00** to Pr **21.51**	Pr **0.00**	RW	Uni	DE		PT	US	✓	✓
x.27	Relay 1 source	Pr **0.00** to Pr **21.51**	Pr **0.00**	RW	Uni			PT	US	✓	✓
x.30	Real time clock update mode	0 to 2	0	RW	Uni		NC				✓
x.34	Real time clock time: minutes.seconds	0.00 to 59.59		RW	Uni		NC	PT			✓
x.35	Real time clock time: days.hours	1.00 to 7.23		RW	Uni		NC	PT			✓
x.36	Real time clock time: months.days	0.00 to 12.31		RW	Uni		NC	PT			✓
x.37	Real time clock time: years	2000 to 2099		RW	Uni		NC	PT			✓
x.38	Analog input 1 mode	0-20 (0), 20-0 (1), 4-20.tr (2), 20-4.tr (3), 4-20 (4), 20-4 (5), VOLt(6)	0-20 (0)	RW	Txt				US	✓	✓
x.39	Analog output mode	0-20 (0), 20-0 (1), 4-20 (2), 20-4 (3), VOLt (4)	0-20 (0)	RW	Txt				US	✓	✓
x.40	Analog input 1	±100.0%		RO	Bi		NC	PT		✓	✓
x.41	Analog input 1 scaling	0 to 4.000	1.000	RW	Uni				US	✓	✓
x.42	Analog input 1 invert	OFF (0) or On (1)	OFF (0)	RW	Bit				US	✓	✓
x.43	Analog input 1 destination	Pr **0.00** to Pr **21.51**	Pr **0.00**	RW	Uni	DE		PT	US	✓	✓
x.48	Analog output 1 source	Pr **0.00** to Pr **21.51**	Pr **0.00**	RW	Uni			PT	US	✓	✓
x.49	Analog output 1 scaling	0.000 to 4.000	1.000	RW	Uni				US	✓	✓
x.50	Solutions Module error status*	0 to 255		RO	Uni		NC	PT		✓	✓
x.51	Solutions Module software sub-version	0 to 99		RO	Uni		NC	PT		✓	✓

RW	Read / Write	RO	Read only	Uni	Unipolar	Bi	Bi-polar	Bit	Bit parameter	Txt	Text string		
FI	Filtered	DE	Destination	NC	Not copied	RA	Rating dependent	PT	Protected	US	User save	PS	Power down save

*See trip SLX.Er, *Automation (I/O Expansion) module category* on page 294.

Figure 11-36 SM-I/O PELV digital I/O logic diagram

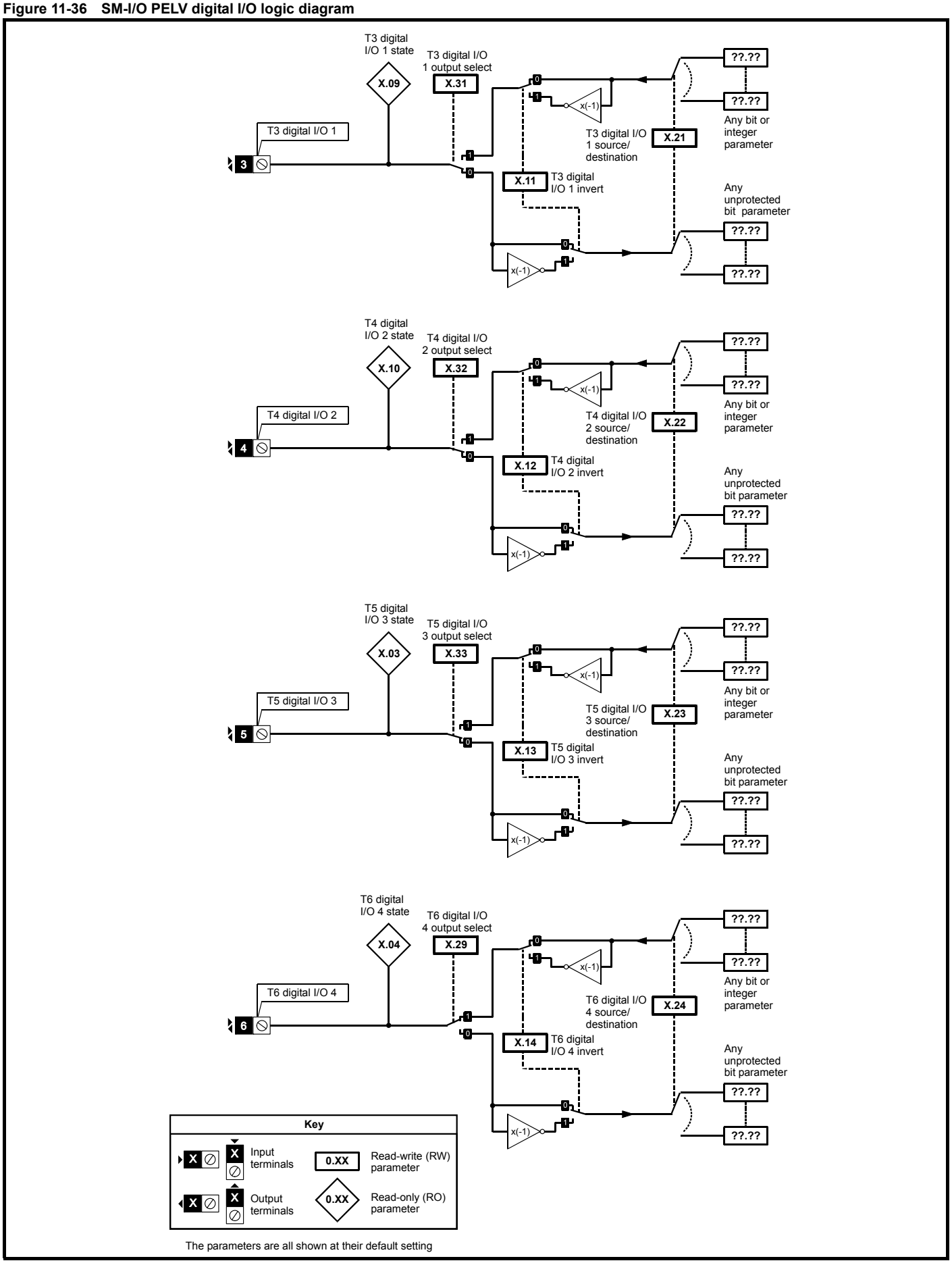

The parameters are all shown at their default setting

Figure 11-37 SM-I/O PELV digital input logic diagram

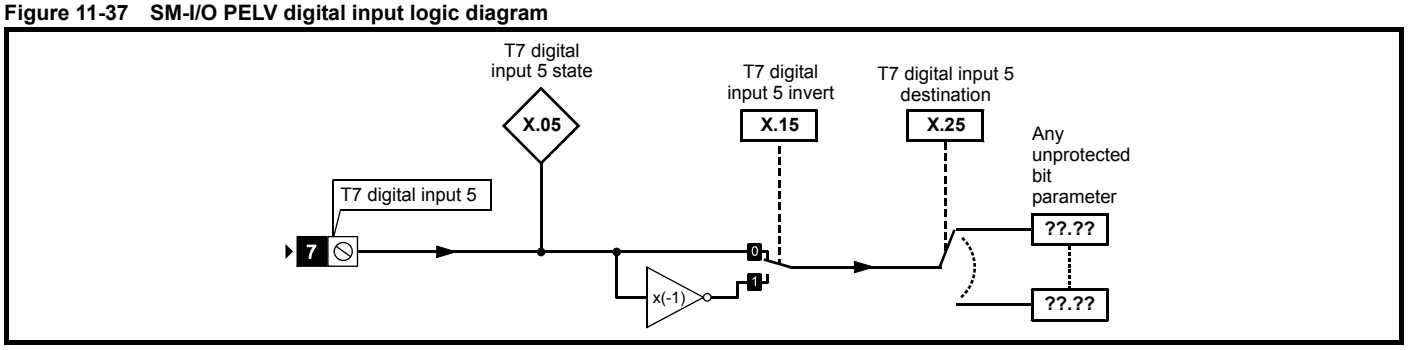

Figure 11-38 SM-I/O PELV relay logic diagram

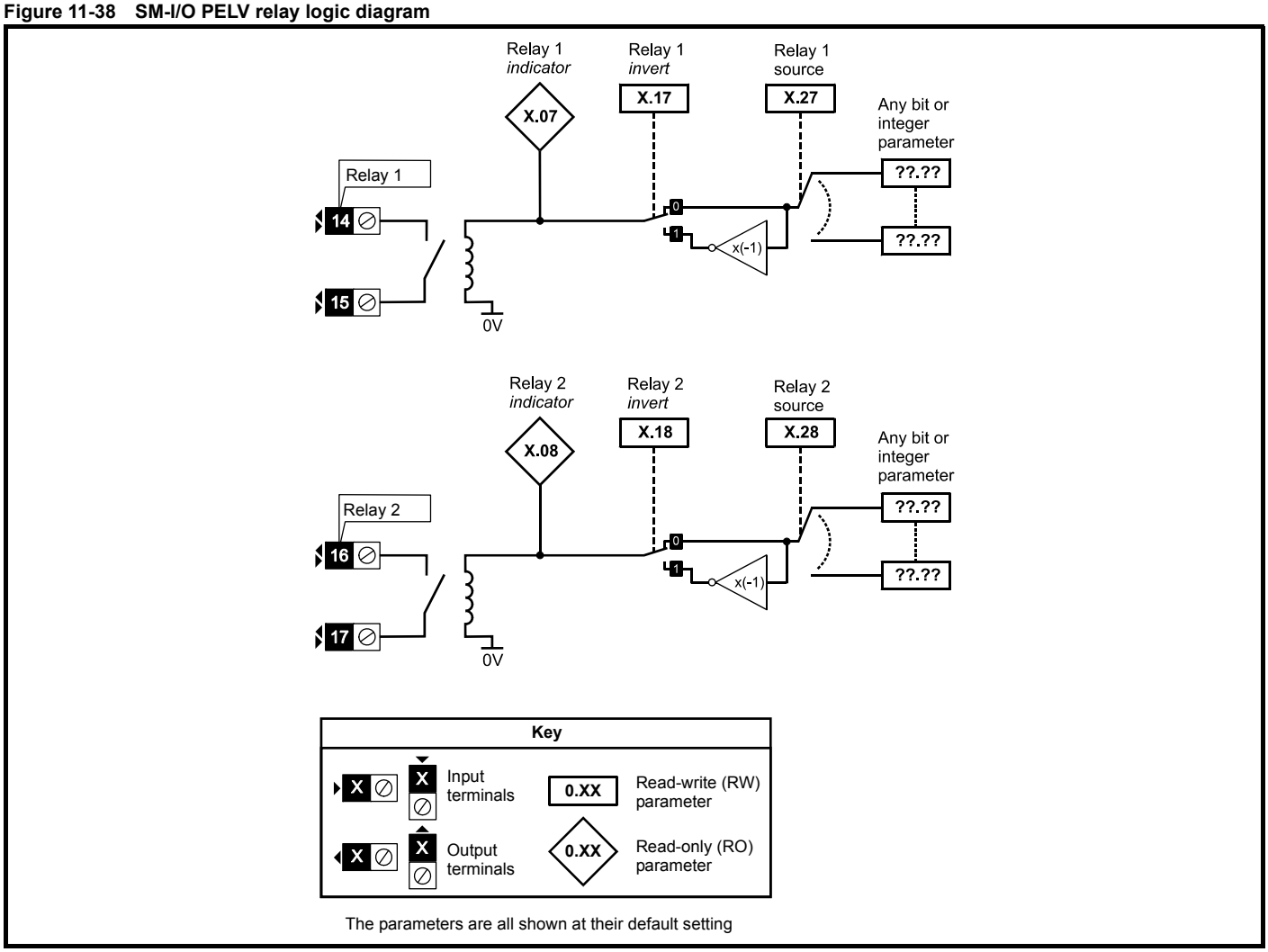

The parameters are all shown at their default setting

Figure 11-39 SM-I/O PELV analog input logic diagram

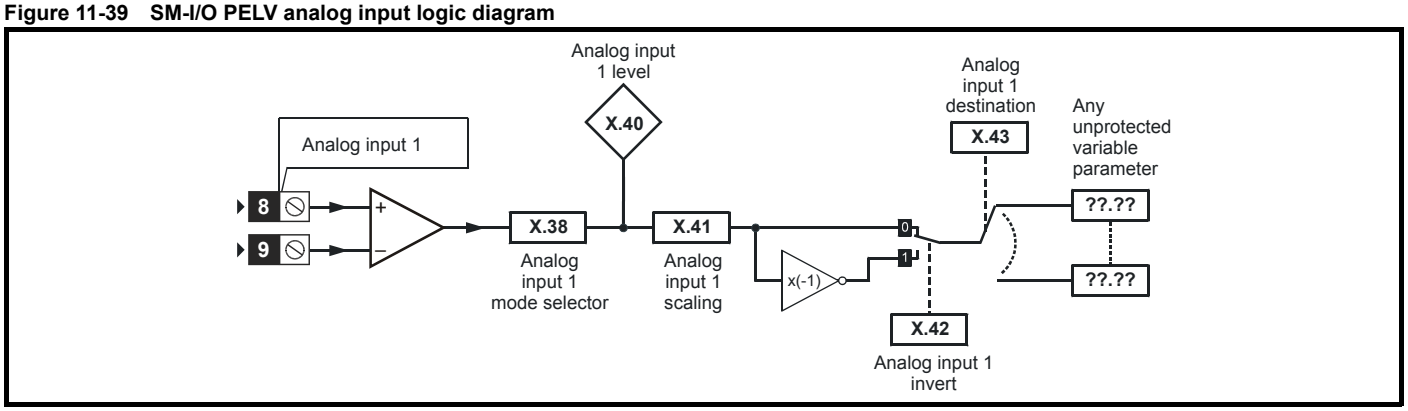

Figure 11-40 SM-I/O PELV analog output logic diagram

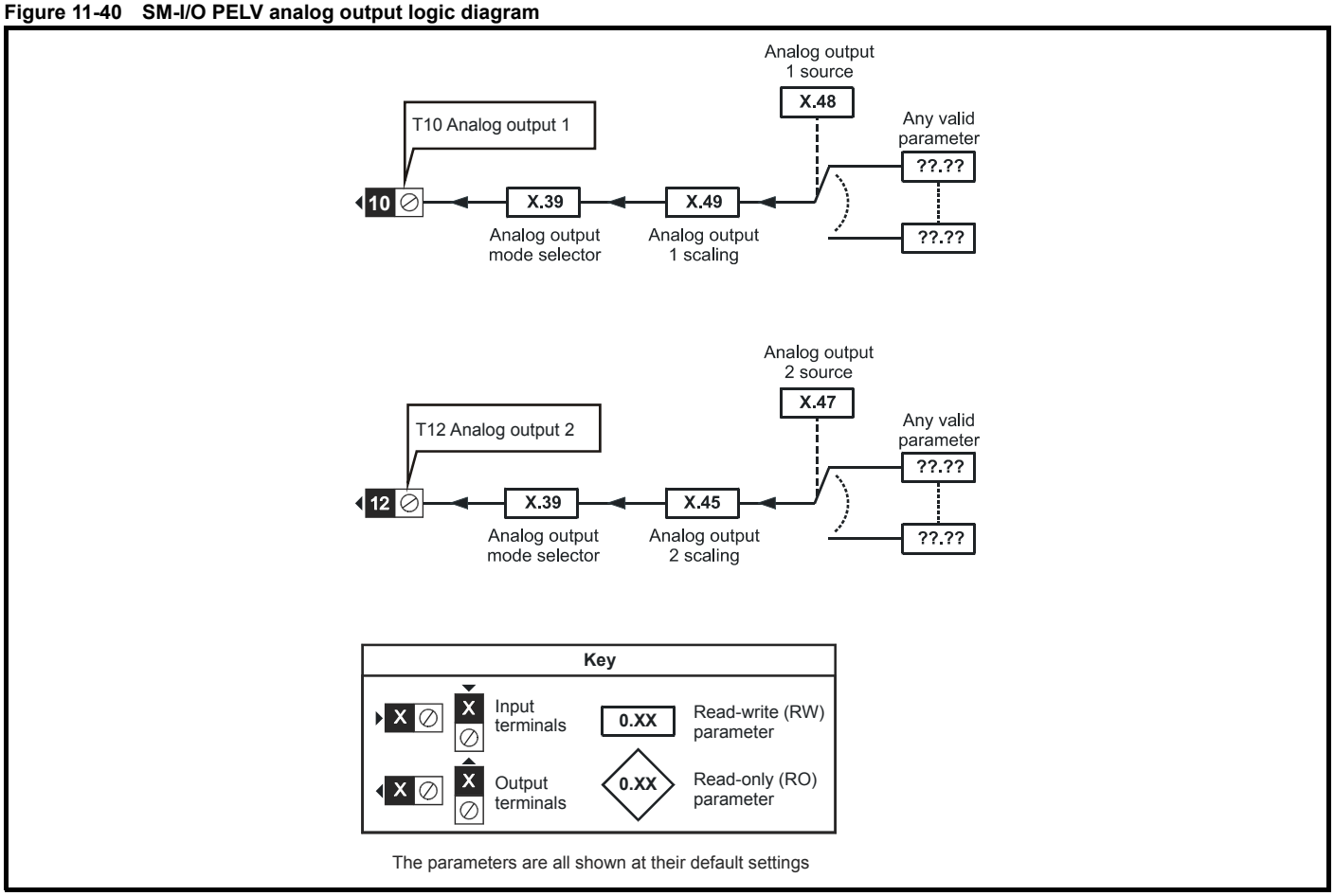

The parameters are all shown at their default settings

SM-I/O PELV parameters

Parameter		Range(⇳)	Default(⇨)	Type					
x.01	Solutions Module ID	0 to 599	204	RO	Uni			PT	US
x.02	Solutions Module software version	0.00 to 99.99		RO	Uni		NC	PT	
x.03	T5 digital I/O 3 state	OFF (0) or On (1)		RO	Bit		NC	PT	
x.04	T6 digital I/O 4 state	OFF (0) or On (1)		RO	Bit		NC	PT	
x.05	T7 digital input 5 state	OFF (0) or On (1)		RO	Bit		NC	PT	
x.07	Relay 1 state	OFF (0) or On (1)		RO	Bit		NC	PT	
x.08	Relay 2 state	OFF (0) or On (1)		RO	Bit		NC	PT	
x.09	T3 digital I/O 1 state	OFF (0) or On (1)		RO	Bit		NC	PT	
x.10	T4 digital I/O 2 state	OFF (0) or On (1)		RO	Bit		NC	PT	
x.11	T3 digital I/O 1 invert	OFF (0) or On (1)	OFF (0)	RW	Bit				US
x.12	T4 digital I/O 2 invert	OFF (0) or On (1)	OFF (0)	RW	Bit				US
x.13	T5 digital I/O 3 invert	OFF (0) or On (1)	OFF (0)	RW	Bit				US
x.14	T6 digital I/O 4 invert	OFF (0) or On (1)	OFF (0)	RW	Bit				US
x.15	T7 digital input 5 invert	OFF (0) or On (1)	OFF (0)	RW	Bit				US
x.16	Disable PELV User power supply absent trip	OFF (0) or On (1)	OFF (0)	RW	Bit				US
x.17	Relay 1 invert	OFF (0) or On (1)	OFF (0)	RW	Bit				US
x.18	Relay 2 invert	OFF (0) or On (1)	OFF (0)	RW	Bit				US
x.19	Freeze flag	OFF (0) or On (1)	OFF (0)	RW	Bit				US
x.20	Digital I/O read word	0 to 255		RO	Uni		NC	PT	
x.21	T3 digital I/O 1 source/destination	Pr **0.00** to Pr **21.51**	Pr **0.00**	RW	Uni	DE		PT	US
x.22	T4 digital I/O 2 source/destination	Pr **0.00** to Pr **21.51**	Pr **0.00**	RW	Uni	DE		PT	US
x.23	T5 digital I/O 3 source/destination	Pr **0.00** to Pr **21.51**	Pr **0.00**	RW	Uni	DE		PT	US
x.24	T6 digital I/O 4 source/destination	Pr **0.00** to Pr **21.51**	Pr **0.00**	RW	Uni	DE		PT	US
x.25	T7 digital input 5 destination	Pr **0.00** to Pr **21.51**	Pr **0.00**	RW	Uni	DE		PT	US
x.27	Relay 1 source	Pr **0.00** to Pr **21.51**	Pr **0.00**	RW	Uni			PT	US
x.28	Relay 2 source	Pr **0.00** to Pr **21.51**	Pr **0.00**	RW	Uni			PT	US
x.29	T6 digital I/O 4 output select	OFF (0) or On (1)	On (1)	RW	Bit				US
x.31	T3 digital I/O 1 output select	OFF (0) or On (1)	OFF (0)	RW	Bit				US
x.32	T4 digital I/O 2 output select	OFF (0) or On (1)	OFF (0)	RW	Bit				US
x.33	T5 digital I/O 3 output select	OFF (0) or On (1)	OFF (0)	RW	Bit				US
x.38	Analog input 1 mode	0-20 (0), 20-0 (1), 4-20.tr (2), 20-4.tr (3), 4-20 (4), 20-4 (5)	0-20 (0)	RW	Txt				US
x.39	Analog output mode	0-20 (0), 20-0 (1), 4-20 (2), 20-4 (3)	0-20 (0)	RW	Txt				US
x.40	Analog input 1 level	0.0 to 100.0%		RO	Bi		NC	PT	
x.41	Analog input 1 scaling	0.000 to 4.000	1.000	RW	Uni				US
x.42	Analog input 1 invert	OFF (0) or On (1)	OFF (0)	RW	Bit				US
x.43	Analog input 1 destination	Pr **0.00** to Pr **21.51**	Pr **0.00**	RW	Uni	DE		PT	US
x.45	Analog output 2 scaling	0.000 to 4.000	1.000	RW	Uni				US
x.47	Analog output 2 source	Pr **0.00** to Pr **21.51**	Pr **0.00**	RW	Uni			PT	US
x.48	Analog output 1 source	Pr **0.00** to Pr **21.51**	Pr **0.00**	RW	Uni			PT	US
x.49	Analog output 1 scaling	0.000 to 4.000	1.000	RW	Uni				US
x.50	Solutions Module error status*	0 to 255		RO	Uni		NC	PT	
x.51	Solutions Module software sub-version	0 to 99		RO	Uni		NC	PT	

RW	Read / Write	RO	Read only	Uni	Unipolar	Bi	Bi-polar	Bit	Bit parameter	Txt	Text string		
FI	Filtered	DE	Destination	NC	Not copied	RA	Rating dependent	PT	Protected	US	User save	PS	Power down save

*See trip SLX.Er, *Automation (I/O Expansion) module category* on page 294.

Figure 11-41 SM-I/O 24V Protected digital I/O logic diagram

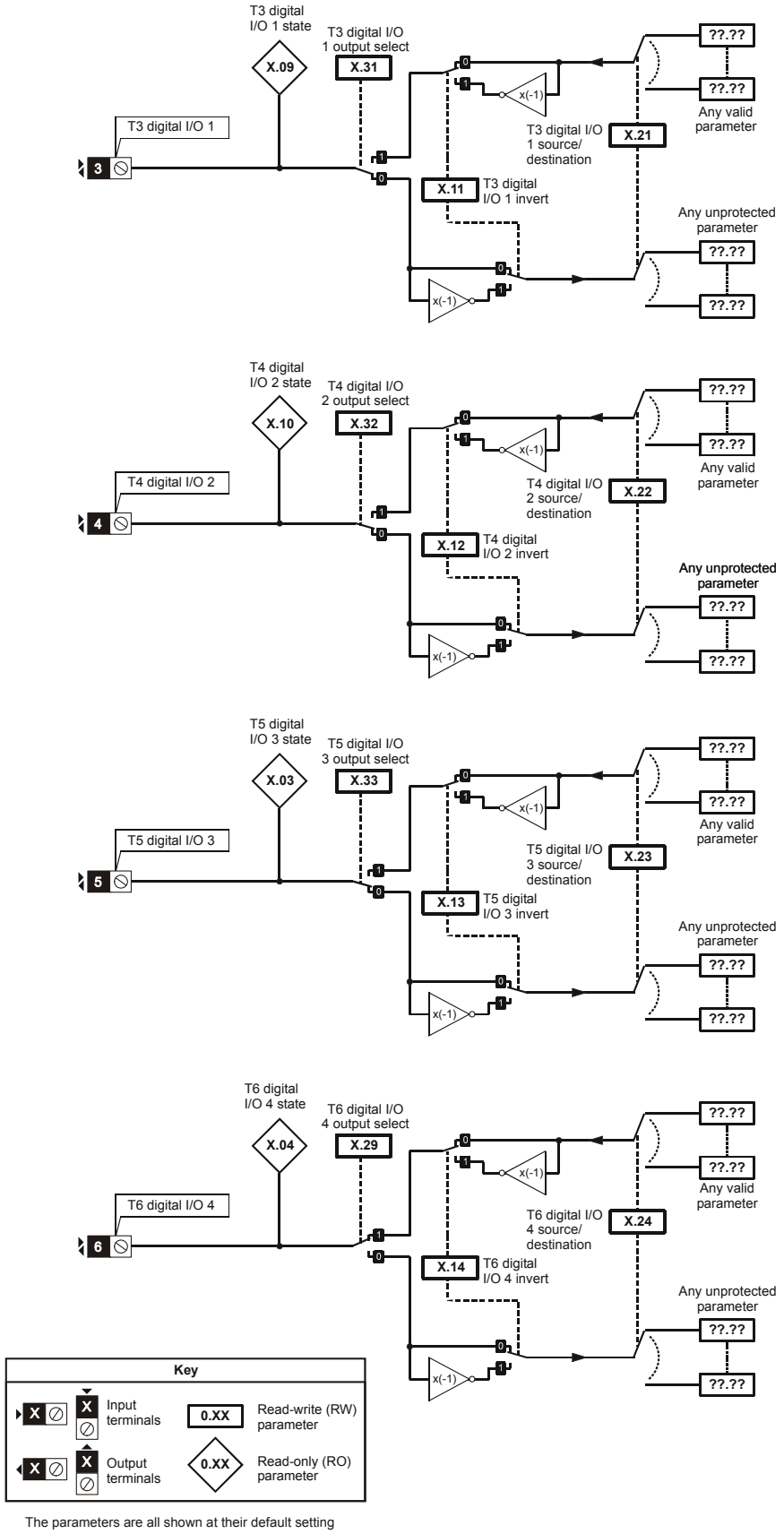

The parameters are all shown at their default setting

Figure 11-42 SM-I/O 24V Protected digital I/O logic diagram

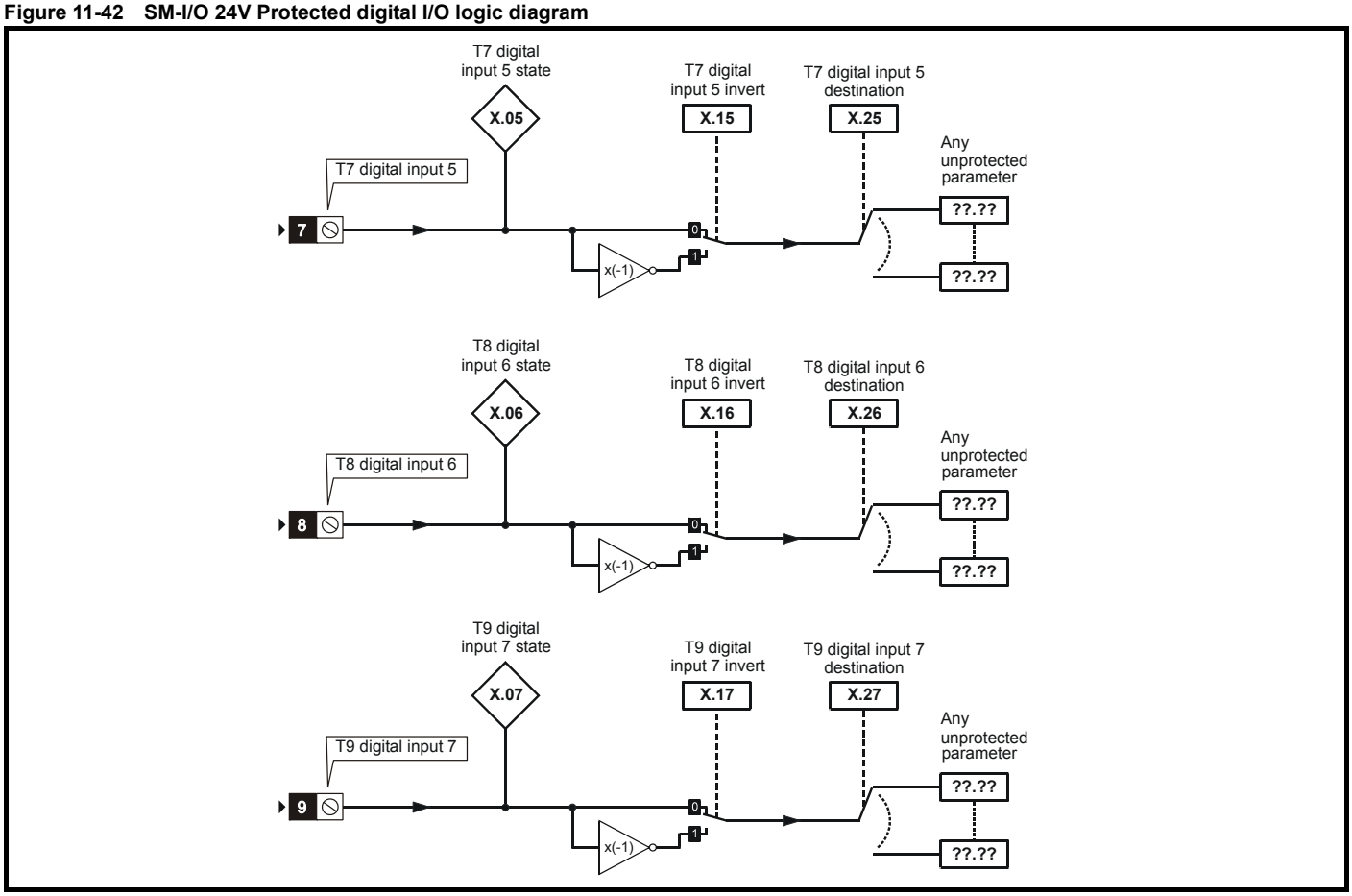

Figure 11-43 SM-I/O 24V Protected relay logic diagram

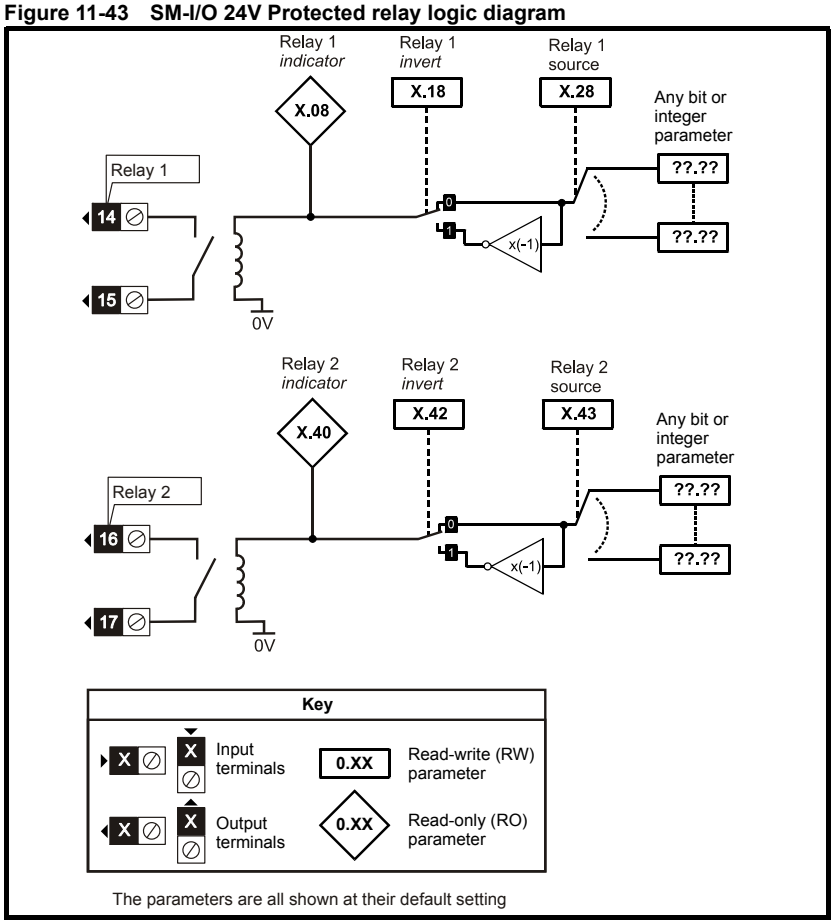

Figure 11-44 SM-I/O 24V Protected analog output logic diagram

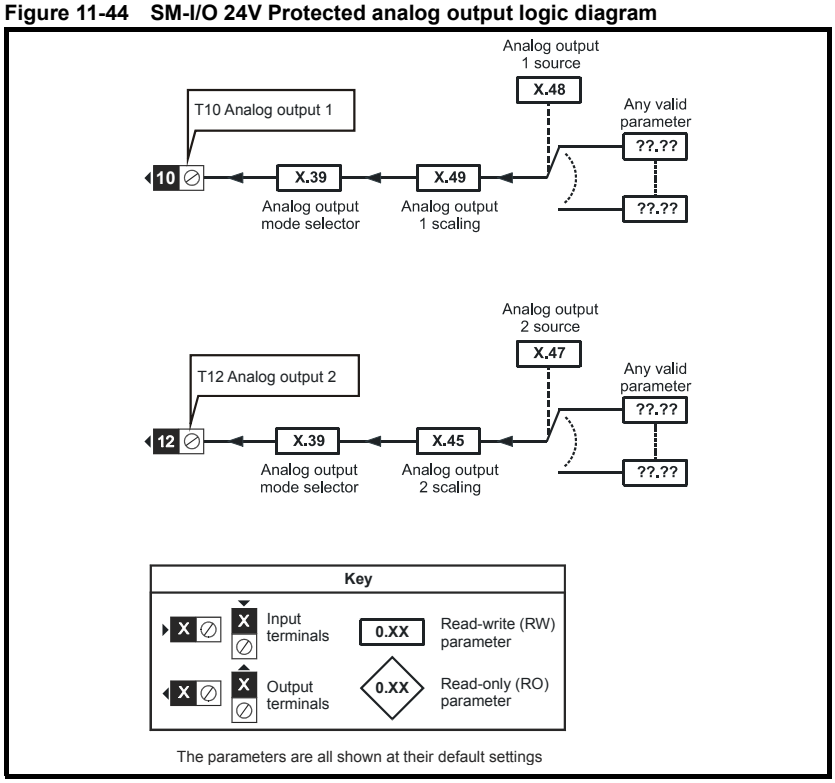

SM-I/O 24V Protected parameters

Parameter		Range(⇳)	Default(⇨)	Type					
x.01	Solutions Module ID	0 to 599	205	RO	Uni			PT	US
x.02	Solutions Module Main Software Version	0.00 to 99.99		RO	Uni		NC	PT	
x.03	T5 digital I/O 3 state	OFF (0) or On (1)		RO	Bit		NC	PT	
x.04	T6 digital I/O 4 state	OFF (0) or On (1)		RO	Bit		NC	PT	
x.05	T7 digital input 5 state	OFF (0) or On (1)		RO	Bit		NC	PT	
x.06	T8 digital input 6 state	OFF (0) or On (1)		RO	Bit		NC	PT	
x.07	T9 digital input 7 state	OFF (0) or On (1)		RO	Bit		NC	PT	
x.08	Relay 1 state	OFF (0) or On (1)		RO	Bit		NC	PT	
x.09	T3 digital I/O 1 state	OFF (0) or On (1)		RO	Bit		NC	PT	
x.10	T4 digital I/O 2 state	OFF (0) or On (1)		RO	Bit		NC	PT	
x.11	T3 digital I/O 1 invert	OFF (0) or On (1)	OFF (0)	RW	Bit				US
x.12	T4 digital I/O 2 invert	OFF (0) or On (1)	OFF (0)	RW	Bit				US
x.13	T5 digital I/O 3 invert	OFF (0) or On (1)	OFF (0)	RW	Bit				US
x.14	T6 digital I/O 4 invert	OFF (0) or On (1)	OFF (0)	RW	Bit				US
x.15	T7 digital input 5 invert	OFF (0) or On (1)	OFF (0)	RW	Bit				US
x.16	T8 digital input 6 invert	OFF (0) or On (1)	OFF (0)	RW	Bit				US
x.17	T9 digital input 7 invert	OFF (0) or On (1)	OFF (0)	RW	Bit				US
x.18	Relay 1 invert	OFF (0) or On (1)	OFF (0)	RW	Bit				US
x.20	Digital I/O read word	0 to 255		RO	Uni		NC	PT	
x.21	T3 digital I/O 1 source/destination	Pr **0.00** to Pr **21.51**	Pr **0.00**	RW	Uni	DE			US
x.22	T4 digital I/O 2 source/destination	Pr **0.00** to Pr **21.51**	Pr **0.00**	RW	Uni	DE			US
x.23	T5 digital I/O 3 source/destination	Pr **0.00** to Pr **21.51**	Pr **0.00**	RW	Uni	DE			US
x.24	T6 digital I/O 4 source/destination	Pr **0.00** to Pr **21.51**	Pr **0.00**	RW	Uni	DE			US
x.25	T7 digital input 5 destination	Pr **0.00** to Pr **21.51**	Pr **0.00**	RW	Uni	DE			US
x.26	T8 digital input 6 destination	Pr **0.00** to Pr **21.51**	Pr **0.00**	RW	Uni	DE			US
x.27	T9 digital input 7 destination	Pr **0.00** to Pr **21.51**	Pr **0.00**	RW	Uni	DE			US
x.28	Relay 1 source	Pr **0.00** to Pr **21.51**	Pr **0.00**	RW	Uni				US
x.29	T6 digital I/O 4 output select	OFF (0) or On (1)	On (1)	RW	Bit				US
x.31	T3 digital I/O 1 output select	OFF (0) or On (1)	OFF (0)	RW	Bit				US
x.32	T4 digital I/O 2 output select	OFF (0) or On (1)	OFF (0)	RW	Bit				US
x.33	T5 digital I/O 3 output select	OFF (0) or On (1)	OFF (0)	RW	Bit				US
x.39	Analog output mode	0-20, 20-0, 4-20, 20-4	0-20	RW	Uni				US
x.40	Relay 2 state	0.0 or 100.0 %		RO	Bit		NC	PT	
x.42	Relay 2 invert	OFF (0) or On (1)	OFF (0)	RW	Bit				US
x.43	Relay 2 source	Pr **0.00** to Pr **21.51**	Pr **0.00**	RW	Uni				US
x.45	Analog output 2 scaling	0.000 to 4.000	1.000	RW	Uni				US
x.47	Analog output 2 source	Pr **0.00** to Pr **21.51**	Pr **0.00**	RW	Uni				US
x.48	Analog output 1 source	Pr **0.00** to Pr **21.51**	Pr **0.00**	RW	Uni				US
x.49	Analog output 1 scaling	0.000 to 4.000	1.000	RW	Uni				US
x.50	Solutions Module error status	0 to 255		RO	Uni		NC	PT	
x.51	Solutions Module software sub-version	0 to 99		RO	Uni		NC	PT	

Figure 11-45 SM-I/O 120V digital input logic diagram

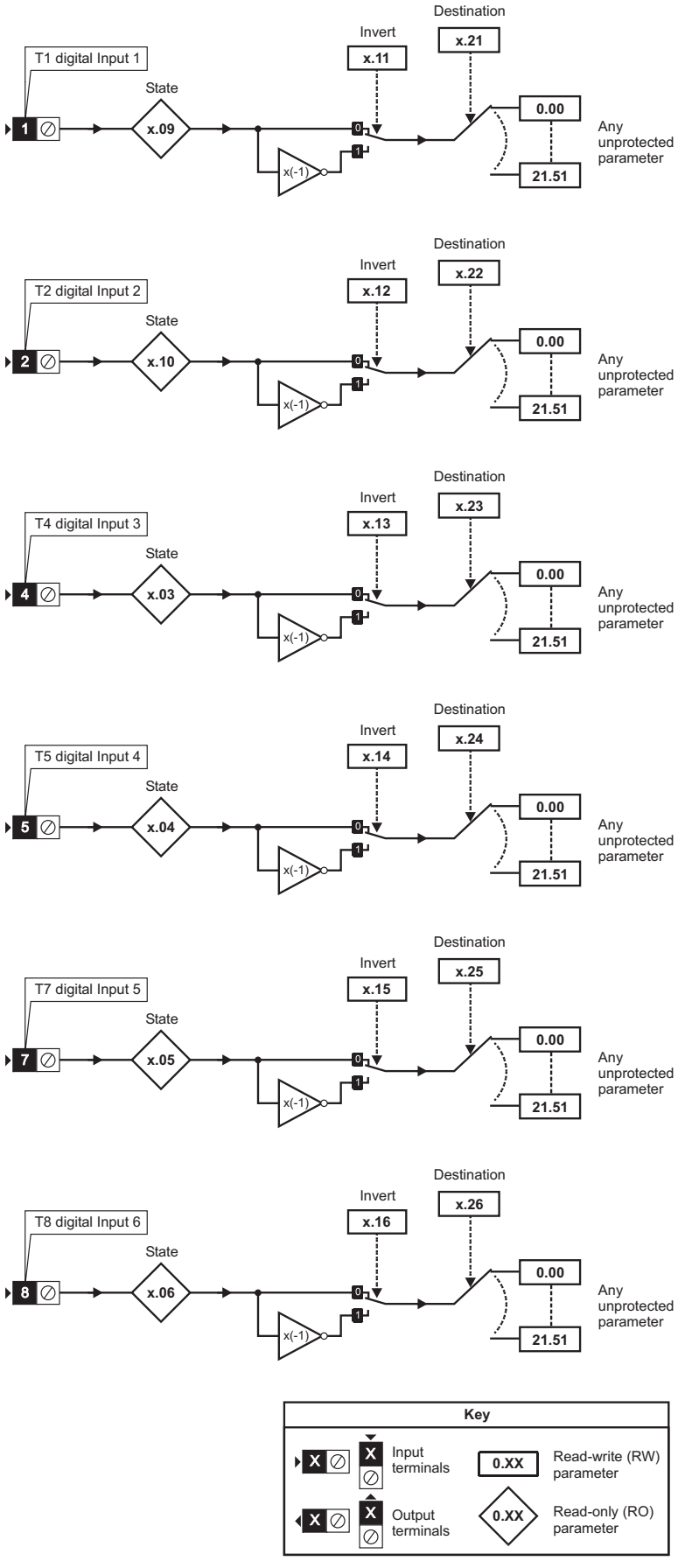

The parameters are all shown at their default settings

Figure 11-46 SM-I/O 120V relay diagram

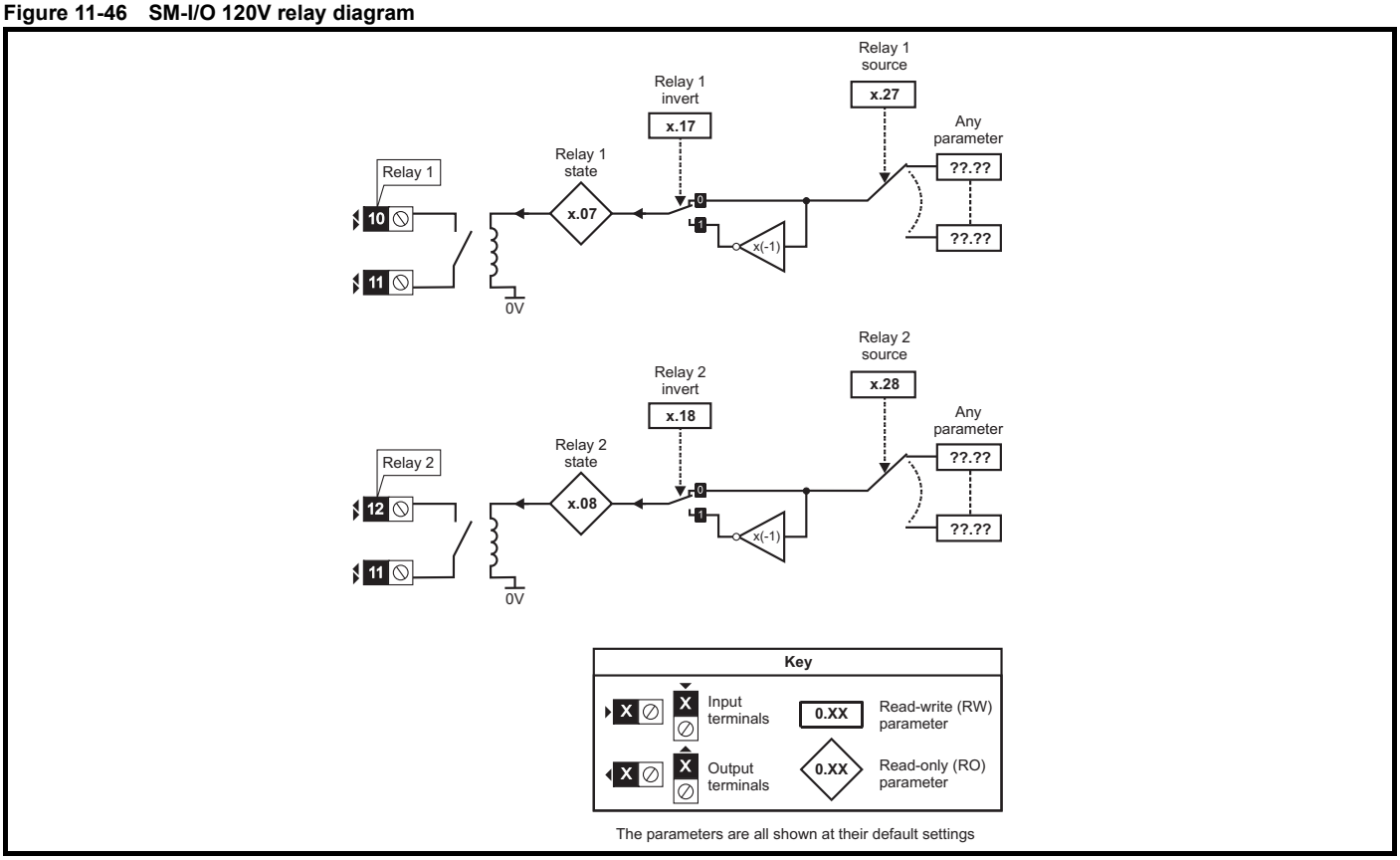

The parameters are all shown at their default settings

SM-I/O 120V parameters

	Parameter	Range(⇳)	Default(⇨)	Type					
x.01	Solutions Module ID	0 to 599	206	RO	Uni			PT	US
x.02	Solutions Module software version	0.00 to 99.99		RO	Uni		NC	PT	
x.03	T4 digital input 3 state	OFF (0) or On (1)		RO	Bit		NC	PT	
x.04	T5 digital input 4 state	OFF (0) or On (1)		RO	Bit		NC	PT	
x.05	T7 digital input 5 state	OFF (0) or On (1)		RO	Bit		NC	PT	
x.06	T8 digital input 6 state	OFF (0) or On (1)		RO	Bit		NC	PT	
x.07	Relay 1 state	OFF (0) or On (1)		RO	Bit		NC	PT	
x.08	Relay 2 state	OFF (0) or On (1)		RO	Bit		NC	PT	
x.09	T1 digital input 1 state	OFF (0) or On (1)		RO	Bit		NC	PT	
x.10	T2 digital input 2 state	OFF (0) or On (1)		RO	Bit		NC	PT	
x.11	T1 digital input 1 invert	OFF (0) or On (1)	OFF (0)	RW	Bit				US
x.12	T2 digital input 2 invert	OFF (0) or On (1)	OFF (0)	RW	Bit				US
x.13	T4 digital input 3 invert	OFF (0) or On (1)	OFF (0)	RW	Bit				US
x.14	T5 digital input 4 invert	OFF (0) or On (1)	OFF (0)	RW	Bit				US
x.15	T7 digital input 5 invert	OFF (0) or On (1)	OFF (0)	RW	Bit				US
x.16	T8 digital input 6 invert	OFF (0) or On (1)	OFF (0)	RW	Bit				US
x.17	Relay 1 invert	OFF (0) or On (1)	OFF (0)	RW	Bit				US
x.18	Relay 2 invert	OFF (0) or On (1)	OFF (0)	RW	Bit				US
x.20	Digital I/O read word	0 to 255		RO	Uni		NC	PT	
x.21	T1 digital input 1 destination	Pr **0.00** to Pr **21.51**	Pr **0.00**	RW	Uni	DE		PT	US
x.22	T2 digital input 2 destination	Pr **0.00** to Pr **21.51**	Pr **0.00**	RW	Uni	DE		PT	US
x.23	T4 digital input 3 destination	Pr **0.00** to Pr **21.51**	Pr **0.00**	RW	Uni	DE		PT	US
x.24	T5 digital input 4 destination	Pr **0.00** to Pr **21.51**	Pr **0.00**	RW	Uni	DE		PT	US
x.25	T7 digital input 5 destination	Pr **0.00** to Pr **21.51**	Pr **0.00**	RW	Uni	DE		PT	US
x.26	T8 digital input 6 destination	Pr **0.00** to Pr **21.51**	Pr **0.00**	RW	Uni	DE		PT	US
x.27	Relay 1 source	Pr **0.00** to Pr **21.51**	Pr **0.00**	RW	Uni			PT	US
x.28	Relay 2 source	Pr **0.00** to Pr **21.51**	Pr **0.00**	RW	Uni			PT	US
x.50	Solutions Module error status*	0 to 255		RO	Uni		NC	PT	
x.51	Solutions Module software sub-version	0 to 99		RO	Uni		NC	PT	

RW	Read / Write	RO	Read only	Uni	Unipolar	Bi	Bi-polar	Bit	Bit parameter	Txt	Text string		
FI	Filtered	DE	Destination	NC	Not copied	RA	Rating dependent	PT	Protected	US	User save	PS	Power down save

*See trip SLX.Er, *Automation (I/O Expansion) module category* on page 294.

Figure 11-47 SM-I/O 32 logic diagram

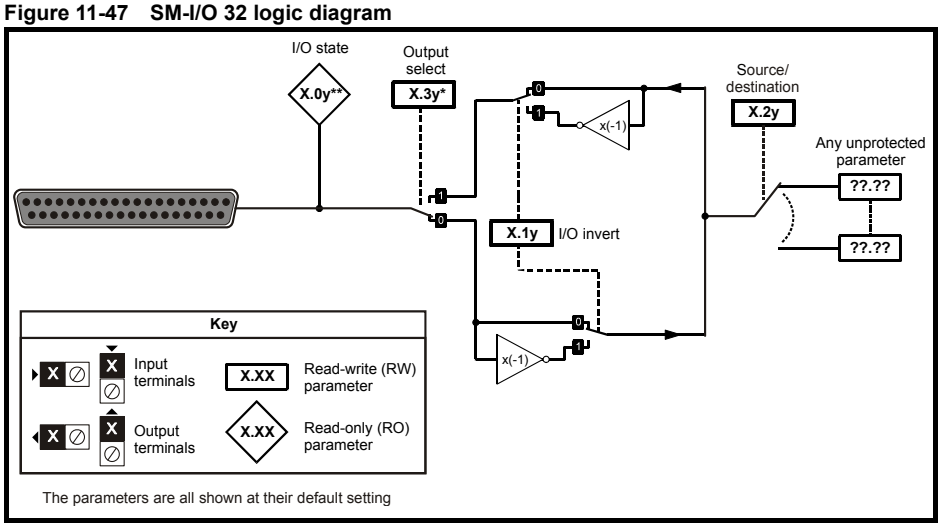

SM-I/O 32 parameters

	Parameter	Range(⇳)	Default(⇨)	Type					
x.01	Solutions Module ID code	0 to 599	208	RO	Uni			PT	US
x.02	Solutions Module main software version	0.00 to 99.99	99.00	RO	Uni		NC	PT	
x.03	Digital I/O 3 state	OFF(0) or On(1)	OFF (0)	RO	Bit		NC	PT	
x.04	Digital I/O 4 state	OFF(0) or On(1)	OFF (0)	RO	Bit		NC	PT	
x.05	Digital I/O 5 state	OFF(0) or On(1)	OFF (0)	RO	Bit		NC	PT	
x.06	Digital I/O 6 state	OFF(0) or On(1)	OFF (0)	RO	Bit		NC	PT	
x.07	Digital I/O 7 state	OFF(0) or On(1)	OFF (0)	RO	Bit		NC	PT	
x.08	Digital I/O 8 state	OFF(0) or On(1)	OFF (0)	RO	Bit		NC	PT	
x.09	Digital I/O 1 state	OFF(0) or On(1)	OFF (0)	RO	Bit		NC	PT	
x.10	Digital I/O 2 state	OFF(0) or On(1)	OFF (0)	RO	Bit		NC	PT	
x.11	Digital I/O 1 invert	OFF(0) or On(1)	OFF (0)	RW	Bit				US
x.12	Digital I/O 2 invert	OFF(0) or On(1)	OFF (0)	RW	Bit				US
x.13	Digital I/O 3 invert	OFF(0) or On(1)	OFF (0)	RW	Bit				US
x.14	Digital I/O 4 invert	OFF(0) or On(1)	OFF (0)	RW	Bit				US
x.15	Digital I/O 5 invert	OFF(0) or On(1)	OFF (0)	RW	Bit				US
x.16	Digital I/O 6 invert	OFF(0) or On(1)	OFF (0)	RW	Bit				US
x.17	Digital I/O 7 invert	OFF(0) or On(1)	OFF (0)	RW	Bit				US
x.18	Digital I/O 8 invert	OFF(0) or On(1)	OFF (0)	RW	Bit				US
x.20	Digital I/O read word	0 to 255	0	RO	Uni		NC	PT	
x.21	Digital I/O 1 source/destination	Pr **0.00** to Pr **21.51**	Pr **0.00**	RW	Uni	DE		PT	US
x.22	Digital I/O 2 source/destination	Pr **0.00** to Pr **21.51**	Pr **0.00**	RW	Uni	DE		PT	US
x.23	Digital I/O 3 source/destination	Pr **0.00** to Pr **21.51**	Pr **0.00**	RW	Uni	DE		PT	US
x.24	Digital I/O 4 source/destination	Pr **0.00** to Pr **21.51**	Pr **0.00**	RW	Uni	DE		PT	US
x.25	Digital I/O 5 source/destination	Pr **0.00** to Pr **21.51**	Pr **0.00**	RW	Uni	DE		PT	US
x.26	Digital I/O 6 source/destination	Pr **0.00** to Pr **21.51**	Pr **0.00**	RW	Uni	DE		PT	US
x.27	Digital I/O 7 source/destination	Pr **0.00** to Pr **21.51**	Pr **0.00**	RW	Uni	DE		PT	US
x.28	Digital I/O 8 source/destination	Pr **0.00** to Pr **21.51**	Pr **0.00**	RW	Uni	DE		PT	US
x.29	Digital I/O 4 output select	OFF(0) or On(1)	On(1)	RW	Bit			PT	US
x.31	Digital I/O 1 output select	OFF(0) or On(1)	OFF (0)	RW	Bit				US
x.32	Digital I/O 2 output select	OFF(0) or On(1)	OFF (0)	RW	Bit				US
x.33	Digital I/O 3 output select	OFF(0) or On(1)	OFF (0)	RW	Bit				US
x.43	First update method direction register	Pr **0.00** to Pr **21.51**	Pr **0.00**	RW	Uni	DE		PT	US
x.47	Fast update method read register	Pr **0.00** to Pr **21.51**	Pr **0.00**	RW	Uni	DE		PT	US
x.48	Fast update method write register	Pr **0.00** to Pr **21.51**	Pr **0.00**	RW	Uni			PT	US
x.50	Solutions Module error status*	0 to 255		RO	Uni		NC	PT	
x.51	Solutions Module software sub-version	0 to 99		RO	Uni		NC	PT	

RW	Read / Write	RO	Read only	Uni	Unipolar	Bi	Bi-polar	Bit	Bit parameter	Txt	Text string		
FI	Filtered	DE	Destination	NC	Not copied	RA	Rating dependent	PT	Protected	US	User save	PS	Power down save

*See trip SLX.Er, *Automation (I/O Expansion) module category* on page 294.

Applications module parameters

Parameter		Range(⇳)	Default(⇨)	Type					
x.01	Solutions Module ID	0 to 599		RO	Uni			PT	US
x.02	Solutions Module software version	0.00 to 99.99		RO	Uni		NC	PT	
x.03	DPL program status	None (0), Stop (1), Run (2), Trip (3)		RO	Txt		NC	PT	
x.04	Available system resource	0 to 100		RO	Uni		NC	PT	
x.05	RS485 address	0 to 255	11	RW	Uni				US
x.06	RS485 mode	0 to 255	1	RW	Uni				US
x.07	RS485 baud rate	300 (0), 600 (1), 1200 (2), 2400 (3), 4800 (4), 9600 (5), 19200 (6), 38400 (7), 57600 (8), 115200 (9) baud	4800 (4)	RW	Txt				US
x.08	RS485 Turnaround delay	0 to 255 ms	2	RW	Uni				US
x.09	RS485 Tx enable delay	0 to 1 ms	0	RW	Uni				US
x.10	DPL Print Routing	SYPT: OFF (0), RS485: On (1)	SYPT: OFF (0)	RW	Bit				US
x.11	Clock task scheduling (ms)	0 to 200	10	RW	Uni				US
x.12	POS task scheduling rate	dISAbLEd (0), 0.25 ms (1), 0.5 ms (2), 1 ms (3), 2 ms (4), 4 ms (5), 8 ms (6)	dISAbLEd (0)	RW	Txt				US
x.13	Enable autorun	OFF (0) or On (1)	On (1)	RW	Bit				US
x.14	Global run time trip enable	OFF (0) or On (1)	OFF (0)	RW	Bit				US
x.15	Disable reset on trip cleared	OFF (0) or On (1)	OFF (0)	RW	Bit				US
x.16	Encoder data update rate	0 to 3	0	RW	Uni				US
x.17	Enable parameter over range trips	OFF (0) or On (1)	OFF (0)	RW	Bit				US
x.18	Watchdog enable	OFF (0) or On (1)	OFF (0)	RW	Bit				US
x.19	Save request	OFF (0) or On (1)	OFF (0)	RW	Bit		NC		
x.20	Enable power down save	OFF (0) or On (1)	OFF (0)	RW	Bit				US
x.21	Enable menu 20 save and restore	OFF (0) or On (1)	OFF (0)	RW	Bit				US
x.22	CTNet Token Ring ID	0 to 255	0	RW	Uni				US
x.23	CTNet node address	0 to 255	0	RW	Uni				US
x.24	CTNet baud rate	5.000 (0), 2.500 (1), 1.250 (2), 0.625 (3)	2.500 (1)	RW	Txt				US
x.25	CTNet sync setup	0,000 to 9,999	0,000	RW	Uni				US
x.26	CTNet easy mode - first cyclic parameter destination node	0 to 25,503	0	RW	Uni				US
x.27	CTNet easy mode - first cyclic source parameter	0 to 9,999	0	RW	Uni				US
x.28	CTNet easy mode - second cyclic parameter destination node	0 to 25,503	0	RW	Uni				US
x.29	CTNet easy mode - second cyclic source parameter	0 to 9,999	0	RW	Uni				US
x.30	CTNet easy mode - third cyclic parameter destination node	0 to 25,503	0	RW	Uni				US
x.31	CTNet easy mode - third cyclic source parameter	0 to 9,999	0	RW	Uni				US
x.32	CTNet easy mode set-up - Transfer slot 1 destination parameter	0 to 9,999	0	RW	Uni				US
x.33	CTNet easy mode set-up - Transfer slot 2 destination parameter	0 to 9,999	0	RW	Uni				US
x.34	CTNet easy mode set-up - Transfer slot 3 destination parameter	0 to 9,999	0	RW	Uni				US
x.35	CTNet sync event task ID	Disabled (0), Event (1), Event1 (2), Event2 (3), Event3 (4)	Disabled (0)	RW	Txt				US
x.36	CTNet diagnostic parameter	-3 to +32,767		RO	Uni		NC	PT	
x.37	Reject download if drive enabled	OFF (0) or On (1)	OFF (0)	RW	Bit				US
x.38	APC run-time trip	OFF (0) or On (1)	OFF (0)	RW	Bit				US
x.39	Inter-module synchronisation status	0 to 3	0	RO	Uni		NC		
x.41	Indexer control	0 to 255	0	RW	Uni		NC		
x.42	Pass freeze through drive	OFF (0) or On (1)	OFF (0)	RW	Bit				US
x.43	Freeze invert	OFF (0) or On (1)	OFF (0)	RW	Bit				US
x.44	Task priority level	0 to 255	0	RW	Uni				US
x.45	User set-up parameter 1	0 to 65535		RO	Uni		NC		
x.46	User set-up parameter 2	-32,768 to +32,767		RO	Uni		NC		
x.47	User set-up parameter 3	0 to 255		RO	Uni		NC		
x.48	DPL line number in error	0 to 2,147,483,647	0	RO	Uni		NC	PT	
x.49	User program ID	-32,768 to +32,767	0	RO	Bi		NC	PT	
x.50	Solutions Module error status*	0 to 255		RO	Uni		NC	PT	
x.51	Solutions Module software sub-version	0 to 99		RO	Uni		NC	PT	

RW	Read / Write	RO	Read only	Uni	Unipolar	Bi	Bi-polar	Bit	Bit parameter	Txt	Text string		
FI	Filtered	DE	Destination	NC	Not copied	RA	Rating dependent	PT	Protected	US	User save	PS	Power down save

*See trip SLX.Er, *Automation (Applications) module category* on page 293.

11.15.4 Fieldbus module category

Fieldbus module parameters

For information regarding fieldbus module parameters, refer to the appropriate Solutions Module User Guide.

11.15.5 SLM module category

Figure 11-48 SM-SLM logic diagram

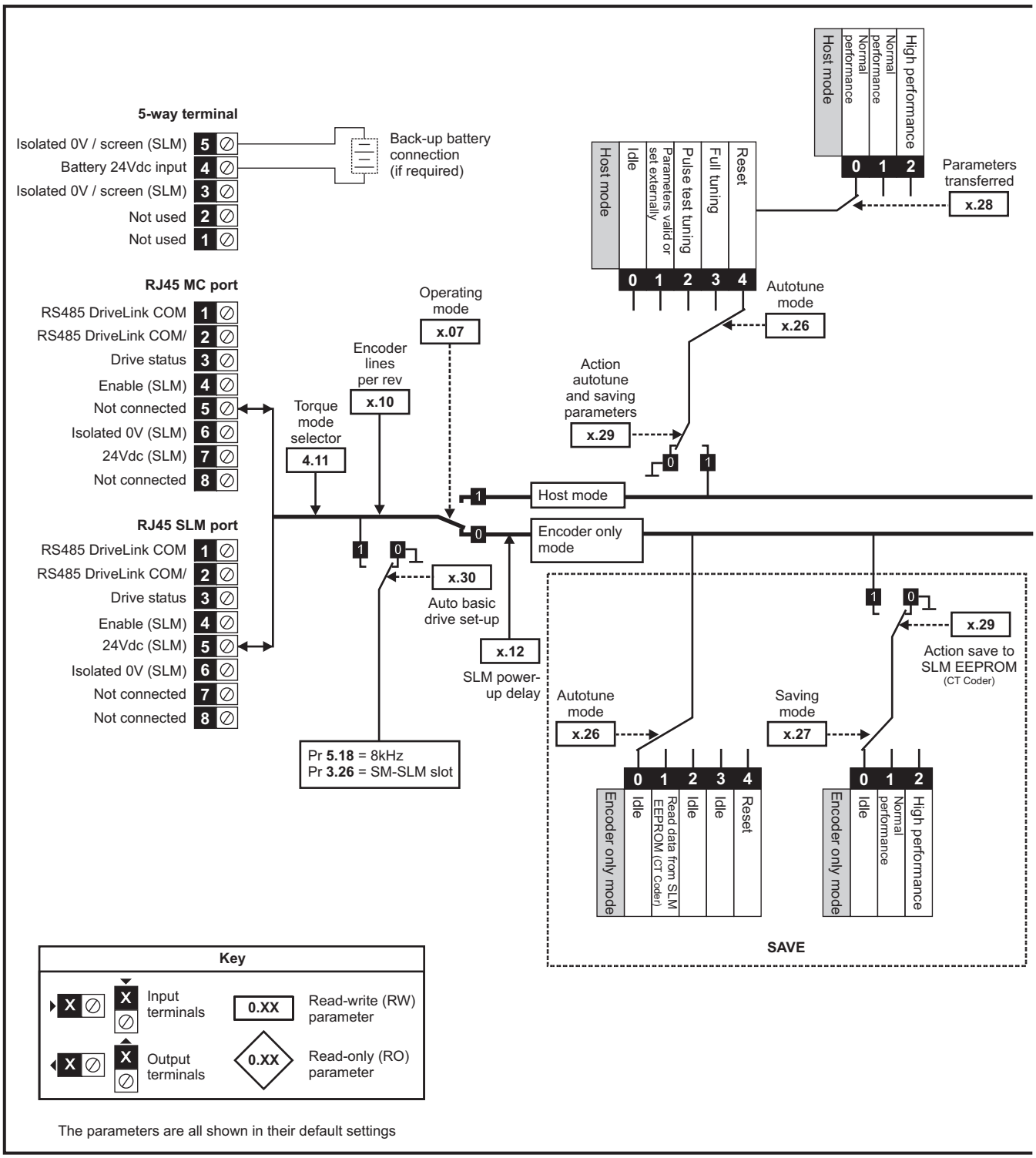

The parameters are all shown in their default settings

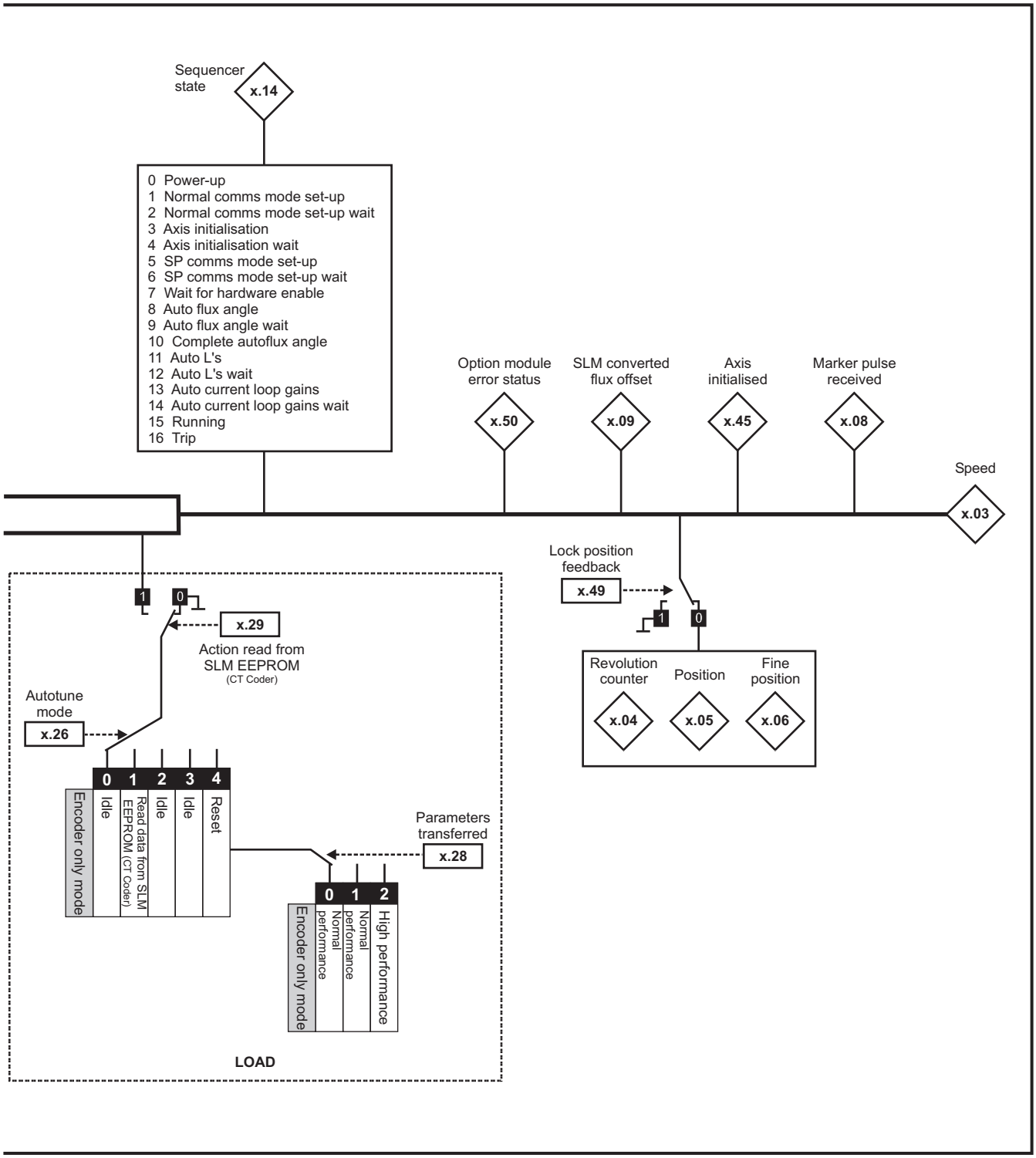
Sequencer state
x.14
0 Power-up
1 Normal comms mode set-up
2 Normal comms mode set-up wait
3 Axis initialisation
4 Axis initialisation wait
5 SP comms mode set-up
6 SP comms mode set-up wait
7 Wait for hardware enable
8 Auto flux angle
9 Auto flux angle wait
10 Complete autoflux angle
11 Auto L's
12 Auto L's wait
13 Auto current loop gains
14 Auto current loop gains wait
15 Running
16 Trip
Option module error status
x.50
SLM converted flux offset
x.09
Axis initialised
x.45
Marker pulse received
x.08
Speed
x.03
Lock position feedback
x.49
x.29
Action read from SLM EEPROM
(CT Coder)
Autotune mode
x.26
0 1 2 3 4
Encoder only mode
Idle
Read data from SLM EEPROM (CT Coder)
Idle
Idle
Reset
Parameters transferred
x.28
0 1 2
Encoder only mode
Normal performance
Normal performance
High performance
Revolution counter
x.04
Position
x.05
Fine position
x.06
LOAD

SM-SLM parameters

Parameter		Range(⇳)	Default(⇨)	Type					
x.01	Solutions Module ID	0 to 499		RO	Uni			PT	US
x.02	Solutions Module software version	0.0 to 99.99		RO	Uni		NC	PT	
x.03	Speed	±40,000.0 rpm		RO	Bi	FI	NC	PT	
x.04	Revolution counter	0 to 65,535 revolutions		RO	Uni	FI	NC	PT	
x.05	Position	0 to 65,535 ($1/2^{16}$ths of a revolution)		RO	Uni	FI	NC	PT	
x.06	Fine position	0 to 65,535 ($1/2^{32}$nds of a revolution)		RO	Uni	FI	NC	PT	
x.07	Operating mode	HoSt (0), Enc.Only (1)	HoSt (0)	RW	Txt				US
x.08	Marker pulse received indicator	OFF (0) or On (1)	OFF (0)	RO	Bit		NC		
x.09	SLM converted flux offset	0 to 65,535	0	RO	Uni				
x.10	Encoder lines per revolution	0 to 50,000	1024	RW	Uni				US
x.11	SLM software version	0.000 to 9.999	0.000	RO	Uni		NC	PT	
x.12	SLM power-up delay	0.000 (0), 0.250 (1), 0.500 (2), 0.750 (3), 1.000 (4), 1.250 (5), 1.500 (6) s	0.250 (1)	RW	Txt				US
x.13	Not used*								
x.14	Sequencer status	0 to 16		RO	Uni		NC	PT	
x.15	Not used*								
x.16	Not used*								
x.17	Not used*								
x.18	Not used*								
x.19	Feedback filter	0 (0), 1 (1), 2 (2), 4 (3), 8 (4), 16 (5) ms	0 (0)	RW	Txt				US
x.20	Not used*								
x.21	Not used*								
x.22	Not used*								
x.23	Not used*								
x.24	Not used*								
x.26	Autotune mode	0 to 4	0	RW	Uni				US
x.27	Saving mode	0 to 2	0	RW	Uni				US
x.28	Parameters transferred	0 to 2	0	RW	Uni				US
x.29	Action the tuning and saving parameters	OFF (0) or On (1)	OFF (0)	RW	Bit				US
x.30	Automatic basic drive set-up request	0 to 1	0	RW	Uni				US
x.32	Not used*								
x.33	Not used*								
x.34	Not used*								
x.35	Not used*								
x.36	Not used*								
x.37	Not used*								
x.38	Not used*								
x.39	Not used*								
x.40	Not used*								
x.41	Not used*								
x.42	Not used*								
x.43	Not used*								
x.44	Not used*								
x.45	Axis initialised	OFF (0) or On (1)		RO	Bit			PT	
x.46	Not used*								
x.47	Not used*								
x.48	Not used*								
x.49	Lock position feedback	OFF (0) or On (1)	OFF (0)	RW	Bit			PT	
x.50	Solutions Module error status**	0 to 255		RO	Uni		NC	PT	
x.51	Solutions Module software sub-version	0 to 99		RO	Uni		NC	PT	

RW	Read / Write	RO	Read only	Uni	Unipolar	Bi	Bi-polar	Bit	Bit parameter	Txt	Text string		
FI	Filtered	DE	Destination	NC	Not copied	RA	Rating dependent	PT	Protected	US	User save	PS	Power down save

* Some of the parameters which are not used will be introduced in scheduled product enhancement.

**See trip SLX.Er, *SLM module category* on page 295.

11.16 Menu 18: Application menu 1

Parameter		Range(⇳)	Default(⇨)	Type					
18.01	Application menu 1 power-down saved integer	-32,768 to +32,767	0	RW	Bi		NC		PS
18.02 to 18.10	Application menu 1 read-only integer	-32,768 to +32,767	0	RO	Bi		NC		
18.11 to 18.30	Application menu 1 read-write integer	-32,768 to +32,767	0	RW	Bi				US
18.31 to 18.50	Application menu 1 read-write bit	OFF (0) or On (1)	0	RW	Bit				US

11.17 Menu 19: Application menu 2

Parameter		Range(⇳)	Default(⇨)	Type					
19.01	Application menu 2 power-down saved integer	-32,768 to +32,767	0	RW	Bi		NC		PS
19.02 to 19.10	Application menu 2 read-only integer	-32,768 to +32,767	0	RO	Bi		NC		
19.11 to 19.30	Application menu 2 read-write integer	-32,768 to +32,767	0	RW	Bi				US
19.31 to 19.50	Application menu 2 read-write bit	OFF (0) or On (1)	0	RW	Bit				US

11.18 Menu 20: Application menu 3

Parameter		Range(⇳)	Default(⇨)	Type					
20.01 to 20.20	Application menu 3 read-write integer	-32,768 to +32,767	0	RW	Bi		NC		
20.21 to 20.40	Application menu 3 read-write long integer	-2^{31} to $2^{31}-1$	0	RW	Bi		NC		

With software V01.07.00 and later, all menu 20 parameters are transferred to the SMARTCARD when a 4yyy transfer is performed. See section 9.2.1 *Writing to the SMARTCARD* on page 151 for more information.

RW	Read / Write	RO	Read only	Uni	Unipolar	Bi	Bi-polar	Bit	Bit parameter	Txt	Text string		
FI	Filtered	DE	Destination	NC	Not copied	RA	Rating dependent	PT	Protected	US	User save	PS	Power down save

11.19 Menu 21: Second motor parameters

Parameter			Range(⇳)		Default(⇨)			Type					
			OL	CL	OL	VT	SV						
21.01	Maximum reference clamp	{**0.02**}*	0 to 3,000.0 Hz	SPEED_LIMIT_MAX rpm	EUR> 50.0 USA> 60.0	EUR> 1,500.0 USA> 1,800.0	3,000.0	RW	Uni				US
21.02	Minimum reference clamp	{**0.01**}*	±3,000.0 Hz	±SPEED_LIMIT_MAX rpm	0.0			RW	Bi			PT	US
21.03	Reference selector	{**0.05**}*	A1.A2 (0), A1.Pr (1), A2.Pr (2), Pr (3), PAd (4), Prc (5)		A1.A2 (0)			RW	Txt				US
21.04	Acceleration rate	{**0.03**}*	0.0 to 3,200.0 s/100Hz	0.000 to 3,200.000 s/1000rpm	5.0	2.000	0.200	RW	Uni				US
21.05	Deceleration rate	{**0.04**}*	0.0 to 3200.0 s/100Hz	0.000 to 3,200.000 s/1000rpm	10.0	2.000	0.200	RW	Uni				US
21.06	Rated frequency	{**0.47**}*	0 to 3000.0 Hz	VT> 0 to 1250.0Hz	EUR> 50 USA> 60			RW	Uni				US
21.07	Rated current	{**0.46**}*	0 to RATED_CURRENT_MAX A		Drive rated current (Pr **11.32**)			RW	Uni		RA		US
21.08	Rated load rpm	{**0.45**}*	0 to 180,000 rpm	0.00 to 40,000.00 rpm	EUR> 1,500 USA> 1,800	EUR> 1,450.00 USA> 1,770.00	3,000.00	RW	Uni				US
21.09	Rated voltage	{**0.44**}*	0 to AC_VOLTAGE_SET_MAX V		200V rating drive: 230V 400V rating drive: EUR> 400V, USA> 460V 575V rating drive: 575V 690V rating drive: 690V			RW	Uni		RA		US
21.10	Rated power factor	{**0.43**}*	0.000 to 1.000	VT> 0.000 to 1.000	0.85			RW	Uni		RA		US
21.11	Number of motor poles	{**0.42**}*	Auto to 120 pole (0 to 60)		Auto (0)		6 POLE (3)	RW	Txt				US
21.12	Stator resistance		Size 0: 0.000 to 65.000 x 10 Ω Size 1 to 5: 0.000 to 65.000 Ω Size 6: 0.000 to 65.000 x 10 mΩ		0.0			RW	Uni		RA		US
21.13	Voltage offset		0.0 to 25.0 V		0.0			RW	Uni		RA		US
21.14	Transient inductance (σL_s)		0.000 to 500.000mH		0.000			RW	Uni		RA		US
21.15	Motor 2 active		OFF (0) or On (1)					RO	Bit		NC	PT	
21.16	Thermal time constant	{**0.45**}*	0.0 to 3000.0		89.0		20.0	RW	Uni				US
21.17	Speed controller Kp gain	{**0.07**}*		0.000 to 6.5535 rad s^{-1}		0.0300	0.0100	RW	Uni				US
21.18	Speed controller Ki gain	{**0.08**}*		0.00 to 655.35 s/rad s^{-1}		0.10	1.00	RW	Uni				US
21.19	Speed controller Kd gain	{**0.09**}*		0.00000 to 0.65535 s^{-1}/rad s^{-1}		0.00000		RW	Uni				US
21.20	Encoder phase angle	{**0.43**}*		0.0 to 359.9 ° electrical			0.0	RW	Uni				US
21.21	Speed feedback selector			drv (0), SLot1 (1), SLot2 (2), SLot3 (3)		drv (0)		RW	Txt				US
21.22	Current controller Kp gain	{**0.38**}*	0 to 30,000		20	200V: 75, 400V: 150, 575V: 180, 690V: 215		RW	Uni				US
21.23	Current controller Ki gain	{**0.39**}*	0 to 30,000		40	200V: 1,000, 400V: 2,000, 575V: 2,400, 690V: 3,000		RW	Uni				US
21.24	Stator inductance (L_s)			VT> 0.00 to 5,000.00 mH		0.00		RW	Uni		RA		US
21.25	Motor saturation breakpoint 1			VT> 0 to 100% of rated flux		50		RW	Uni				US
21.26	Motor saturation breakpoint 2			VT> 0 to 100% of rated flux		75		RW	Uni				US
21.27	Motoring current limit		0 to MOTOR2_CURRENT_LIMIT_MAX %		165.0	175.0		RW	Uni		RA		US
21.28	Regen current limit		0 to MOTOR2_CURRENT_LIMIT_MAX %		165.0	175.0		RW	Uni		RA		US
21.29	Symmetrical current limit	{**0.06**}*	0 to MOTOR2_CURRENT_LIMIT_MAX %		165.0	175.0		RW	Uni		RA		US
21.30	Motor volts per 1,000 rpm, K_e			SV> 0 to 10,000 V			98	RW	Uni				US
21.31	Motor pole pitch		0.00 to 655.35 mm		0.00			RW	Uni				US

RW	Read / Write	RO	Read only	Uni	Unipolar	Bi	Bi-polar	Bit	Bit parameter	Txt	Text string		
FI	Filtered	DE	Destination	NC	Not copied	RA	Rating dependent	PT	Protected	US	User save	PS	Power down save

* The menu 0 references are only valid when the second motor map parameters have been made active by setting Pr **11.45** to 1. (The second motor map only becomes effective when the output stage of the drive is not enabled, i.e. inh, rdY, or trip states.)

When the second motor map parameters are active, the symbol 'Mot2' will appear in the lower left hand corner of the LCD display or the decimal point that is second from the right on the first row of the LED display is lit.

WARNING

Encoder phase angle (servo mode only)

With drive software version V01.08.00 onwards, the encoder phase angles in Pr **3.25** and Pr **21.20** are copied to the SMARTCARD when using any of the SMARTCARD transfer methods.

With drive software version V01.05.00 to V01.07.01, the encoder phase angles in Pr **3.25** and Pr **21.20** are only copied to the SMARTCARD when using either Pr **0.30** set to Prog (2) or Pr **xx.00** set to 3yyy.

This is useful when the SMARTCARD is used to back-up the parameter set of a drive but caution should be used if the SMARTCARD is used to transfer parameter sets between drives.

Unless the encoder phase angle of the servo motor connected to the destination drive is known to be the same as the servo motor connected to the source drive, an autotune should be performed or the encoder phase angle should be entered manually into Pr **3.25** (or Pr **21.20**). If the encoder phase angle is incorrect the drive may lose control of the motor resulting in an O.SPd or Enc10 trip when the drive is enabled.

With drive software version V01.04.00 and earlier, or when using software version V01.05.00 to V01.07.01 and Pr **xx.00** set to 4yyy is used, then the encoder phase angles in Pr **3.25** and Pr **21.20** are not copied to the SMARTCARD. Therefore, Pr **3.25** and Pr **21.20** in the destination would not be changed during a transfer of this data block from the SMARTCARD.

11.20 Menu 22: Additional Menu 0 set-up

Parameter		Range(⇳)	Default(⇨)			Type					
			OL	VT	SV						
22.01	Parameter **0.31** set-up	Pr **1.00** to Pr **21.51**	Pr **11.33**			RW	Uni			PT	US
22.02	Parameter **0.32** set-up	Pr **1.00** to Pr **21.51**	Pr **11.32**			RW	Uni			PT	US
22.03	Parameter **0.33** set-up	Pr **1.00** to Pr **21.51**	Pr **6.09**	Pr **5.16**	Pr **0.00**	RW	Uni			PT	US
22.04	Parameter **0.34** set-up	Pr **1.00** to Pr **21.51**	Pr **11.30**			RW	Uni			PT	US
22.05	Parameter **0.35** set-up	Pr **1.00** to Pr **21.51**	Pr **11.24**			RW	Uni			PT	US
22.06	Parameter **0.36** set-up	Pr **1.00** to Pr **21.51**	Pr **11.25**			RW	Uni			PT	US
22.07	Parameter **0.37** set-up	Pr **1.00** to Pr **21.51**	Pr **11.23**			RW	Uni			PT	US
22.10	Parameter **0.40** set-up	Pr **1.00** to Pr **21.51**	Pr **5.12**			RW	Uni			PT	US
22.11	Parameter **0.41** set-up	Pr **1.00** to Pr **21.51**	Pr **5.18**			RW	Uni			PT	US
22.18	Parameter **0.48** set-up	Pr **1.00** to Pr **21.51**	Pr **11.31**			RW	Uni			PT	US
22.20	Parameter **0.50** set-up	Pr **1.00** to Pr **21.51**	Pr **11.29**			RW	Uni			PT	US
22.21	Parameter **0.51** set-up	Pr **1.00** to Pr **21.51**	Pr **10.37**			RW	Uni			PT	US
22.22	Parameter **0.52** set-up	Pr **1.00** to Pr **21.51**	Pr **0.00**			RW	Uni			PT	US
22.23	Parameter **0.53** set-up	Pr **1.00** to Pr **21.51**	Pr **0.00**			RW	Uni			PT	US
22.24	Parameter **0.54** set-up	Pr **1.00** to Pr **21.51**	Pr **0.00**			RW	Uni			PT	US
22.25	Parameter **0.55** set-up	Pr **1.00** to Pr **21.51**	Pr **0.00**			RW	Uni			PT	US
22.26	Parameter **0.56** set-up	Pr **1.00** to Pr **21.51**	Pr **0.00**			RW	Uni			PT	US
22.27	Parameter **0.57** set-up	Pr **1.00** to Pr **21.51**	Pr **0.00**			RW	Uni			PT	US
22.28	Parameter **0.58** set-up	Pr **1.00** to Pr **21.51**	Pr **0.00**			RW	Uni			PT	US
22.29	Parameter **0.59** set-up	Pr **1.00** to Pr **21.51**	Pr **0.00**			RW	Uni			PT	US

RW	Read / Write	RO	Read only	Uni	Unipolar	Bi	Bi-polar	Bit	Bit parameter	Txt	Text string		
FI	Filtered	DE	Destination	NC	Not copied	RA	Rating dependent	PT	Protected	US	User save	PS	Power down save

11.21 Advanced features

This section gives information on some of the advanced functions of the drive. For additional information see the *Advanced User Guide*.

Reference modes	Pr **1.14**, Pr **1.15** and Pr **8.39**
Braking modes	Pr **2.04** and Pr **2.08**
S ramps	Pr **2.06** and Pr **2.07**
Torque modes	Pr **4.08** and Pr **4.11**
Stop modes	Pr **6.01**, Pr **6.06**, Pr **6.07** and Pr **6.08**
Main loss modes	Pr **6.03**, Pr **6.48**, Pr **4.13** and Pr **4.14**
Start/stop logic modes	Pr **6.04** and Pr **6.40**
Catch a spinning motor	Pr **6.09** and Pr **5.40**
Position loop modes	Pr **13.10**
Fast disable	Pr **6.29**

11.21.1 Reference modes

1.14	**Reference selector**								
RW	Txt					NC		US	
⇳	A1.A2 (0), A1.Pr (2), A2.Pr (2), Pr (3), PAd (4), Prc (5)				⇨	A1.A2 (0)			

1.15	**Preset reference selector**								
RW	Uni					NC		US	
⇳	0 to 9				⇨	0			

8.39	**T28 and T29 auto-selection disable**								
RW	Bit							US	
⇳	OFF (0) or On (1)				⇨	OFF (0)			

If Pr **8.39** is set to OFF (0), then the setting of Pr **1.14** automatically changes the operation of digital inputs T28 and T29 by configuring the destination parameters Pr **8.25** and Pr **8.26**. To allow Pr **8.25** and Pr **8.26** to be changed manually by the user, the automatic set-up must be disabled by setting Pr **8.39** to 1.

If Pr **8.39** is 0 and Pr **1.14** is changed, then a drive reset is required before the function of terminal T28 or T29 will become active.

Table 11-7 Active reference

Pr 1.14	Pr 1.15	Digital Input T28		Digital Input T29		Pr 1.49	Pr 1.50	Active Reference
		State	Function	State	Function			
A1.A2 (0)	0 or 1	0	Local Remote		Jog forward**	1	1	Analog input 1
		1				2	1	Analog input 2
	2 to 8		No function			1 or 2	2 to 8	Preset reference 2 to 8
	9 *	0	Local Remote			1	1	Analog input 1
		1				2	1	Analog input 2
			No function			1 or 2	2 to 8	Preset reference 2 to 8
A1.Pr (1)	0	0	Preset select bit 0	0	Preset select bit 1	1	1	Analog input 1
		1					2	Preset reference 2
		0		1			3	Preset reference 3
		1					4	Preset reference 4
	1		No function		No function		1	Analog input 1
	2 to 8						2 to 8	Preset reference 2 to 8
	9 *						1	Analog input 1
							2 to 8	Preset reference 2 to 8
A2.Pr (2)	0	0	Preset select bit 0	0	Preset select bit 1	2	1	Analog input 2
		1					2	Preset reference 2
		0		1			3	Preset reference 3
		1					4	Preset reference 4
	1		No function		No function		1	Analog input 2
	2 to 8						2 to 8	Preset reference 2 to 8
	9 *						1	Analog input 2
							2 to 8	Preset reference 2 to 8
Pr (3)	0	0	Preset select bit 0	0	Preset select bit 1	3	1	Preset reference 1
		1					2	Preset reference 2
		0		1			3	Preset reference 3
		1					4	Preset reference 4
	1 to 8		No function		No function		1 to 8	Preset reference 1 to 8
	9 *						1 to 8	Preset reference 1 to 8
PAd (4)			No function		No function	4		Keypad reference
Prc (5)			No function		No function	5		Precision reference

* Setting Pr **1.15** to 9 enables the Preset reference scan timer. With the scan timer enabled analog 1 and preset references 2 to 8 are selected automatically in turn. Pr **1.16** defines the time between each change.

** Jog forward can only be selected when the drive is in either the ready (rdy), inhibit (inh) or trip states.

Preset references
Preset references 1 to 8 are contained in Pr **1.21** to Pr **1.28**.

Keypad reference
If Keypad reference is selected the drive sequencer is controlled directly by the keypad keys and the keypad reference parameter (Pr **1.17**) is selected. The sequencing bits, Pr **6.30** to Pr **6.34**, and Pr **6.37** have no effect and jog is disabled.

Precision reference
If Precision reference is selected the speed reference is given Pr **1.18** and Pr **1.19**.

11.21.2 Braking Modes

2.04		Ramp mode select								
RW	Txt								US	
OL	⇳	FASt (0), Std (1), Std.hV (2)				⇨	Std (1)			
CL		FASt (0), Std (1)								

This parameter does not affect the acceleration ramp, as the ramp output always rises at the programmed acceleration rate subject to the current limits. It is possible in under some unusual circumstances in open-loop mode (i.e. highly inductive supply) for the motor to reach a low speed in standard ramp mode, but not completely stop. It is also possible if the drive attempts to stop the motor with an overhauling load in any mode that the motor will not stop when standard ramp mode or fast ramp mode is used. If the drive is in the deceleration state the rate of fall of the frequency or speed is monitored. If this does not fall for 10 seconds the drive forces the frequency or the speed reference to zero. This only applies when the drive is in the deceleration state and not when the reference is simply set to zero.

0: Fast ramp

Fast ramp is used where the deceleration follows the programmed deceleration rate subject to current limits.

1: Standard ramp

Standard ramp is used. During deceleration, if the voltage rises to the standard ramp level (Pr **2.08**) it causes a controller to operate, the output of which changes the demanded load current in the motor. As the controller regulates the link voltage, the motor deceleration increases as the speed approaches zero speed. When the motor deceleration rate reaches the programmed deceleration rate the controller ceases to operate and the drive continues to decelerate at the programmed rate. If the standard ramp voltage (Pr **2.08**) is set lower than the nominal DC bus level the drive will not decelerate the motor, but it will coast to rest. The output of the ramp controller (when active) is a current demand that is fed to the frequency changing current controller (Open-loop modes) or the torque producing current controller (Closed-loop vector or Servo modes). The gain of these controllers can be modified with Pr **4.13** and Pr **4.14**.

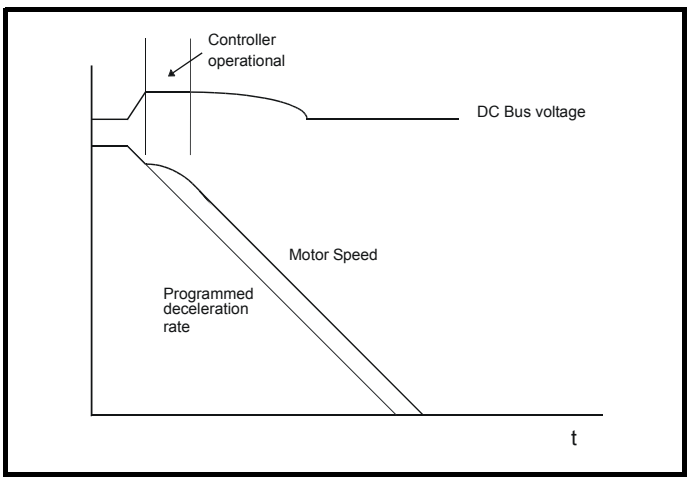

2: Standard ramp with motor voltage boost

This mode is the same as normal standard ramp mode except that the motor voltage is boosted by 20%. This increases the losses in the motor giving faster deceleration.

2.08		Standard ramp voltage								
RW	Uni			RA					US	
⇳	0 to DC_VOLTAGE_SET_MAX V					⇨	200V drive: 375 400V drive: EUR> 750 USA> 775 575V drive: 895 690V drive: 1075			

This voltage is used as the control level for standard ramp mode. If this parameter is set too low the machine will coast to rest, and if it is set too high and no braking resistor is used the drive may give an over-volt 'OV' trip. The minimum level should be greater than the voltage produced on the DC bus by the highest supply voltage. Normally the DC bus voltage will be approximately the rms supply line voltage x √2.

WARNING

Care should be taken in the setting of this parameter. It is recommended that the setting should be at least 50V higher than the maximum expected level of the DC bus voltage. If this is not done, the motor may fail to decelerate on a STOP command.

11.21.3 S ramps

2.06		S ramp enable								
RW	Bit								US	
⇳	OFF (0) or On (1)					⇨	OFF (0)			

Setting this parameter enables the S ramp function. S ramp is disabled during deceleration using standard ramp. When the motor is accelerated again after decelerating in standard ramp the acceleration ramp used by the S ramp function is reset to zero.

2.07		S ramp acceleration limit								
RW	Uni								US	
OL	⇳	0.0 to 300.0 s^2/100Hz				⇨	3.1			
VT		0.000 to 100.000 s^2/1000rpm					1.500			
SV							0.030			

This parameter defines the maximum rate of change of acceleration/ deceleration. The default values have been chosen such that for the default ramps and maximum speed, the curved parts of the S will be 25% of the original ramp if S ramp is enabled.

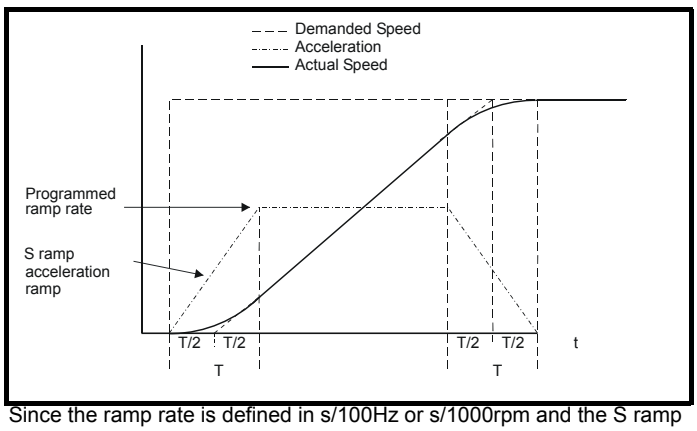

Since the ramp rate is defined in s/100Hz or s/1000rpm and the S ramp parameter is defined in s^2/100Hz or s^2/1000rpm, the time T for the 'curved' part of the S can be determined from:

T = S ramp rate of change / Ramp rate

Enabling S ramp increases the total ramp time by the period T since an additional T/2 is added to each end of the ramp in producing the S.

11.21.4 Torque modes

4.08	Torque reference								
RW	Bi							US	
⇳	±USER_CURRENT_MAX %				⇨	0.00			

Parameter for main torque reference. The normal update rate for the torque reference is 4ms. However if analog inputs 2 or 3 on the drive are used as the source of the reference, the drive is in closed-loop vector or servo mode and the analog inputs are in voltage mode with zero offset, the sample time is reduced to 250μs.

4.11	Torque mode selector								
RW	Uni							US	
OL	⇳	0 to 1			⇨	0			
CL		0 to 4							

Open loop

If this parameter is 0 normal frequency control is used. If this parameter is set to 1 the current demand is connected to the current PI controller giving closed loop torque/current demand as shown below. The current error is passed through proportional and integral terms to give a frequency reference which is limited to the range: -SPEED_FREQ_MAX to +SPEED_FREQ_MAX.

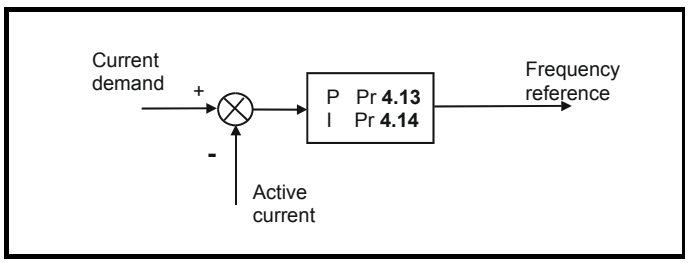

Closed loop vector and Servo

When this parameter is set to 1, 2 or 3 the ramps are not active while the drive is in the run state. When the drive is taken out of the run state, but not disabled, the appropriate stopping mode is used. It is recommended that coast stopping or stopping without ramps are used. However, if ramp stop mode is used the ramp output is pre-loaded with the actual speed at the changeover point to avoid unwanted jumps in the speed reference.

0: Speed control mode

The torque demand is equal to the speed loop output.

1: Torque control

The torque demand is given by the sum of the torque reference and the torque offset, if enabled. The speed is not limited in any way, however, the drive will trip at the overspeed threshold if runaway occurs.

2: Torque control with speed override

The output of the speed loop defines the torque demand, but is limited between 0 and the resultant torque reference (Pr **4.08** and Pr **4.09** (if enabled)). The effect is to produce an operating area as shown below if the final speed demand and the resultant torque reference are both positive. The speed controller will try and accelerate the machine to the final speed demand level with a torque demand defined by the resultant torque reference. However, the speed cannot exceed the reference because the required torque would be negative, and so it would be clamped to zero.

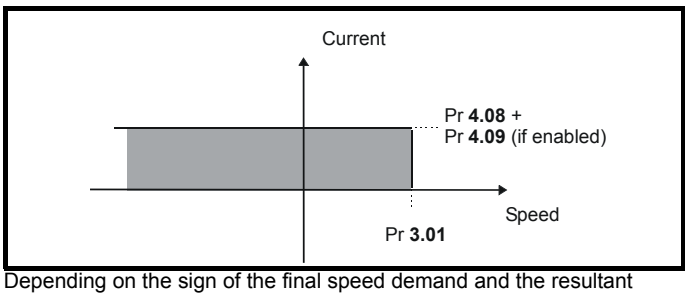

Depending on the sign of the final speed demand and the resultant torque, the four areas of operation shown are possible.

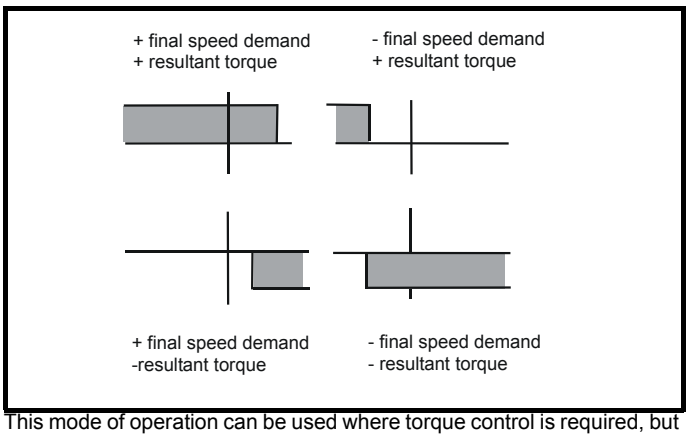

This mode of operation can be used where torque control is required, but the maximum speed must be limited by the drive.

3: Coiler/uncoiler mode

Positive final speed demand:

A positive resultant torque will give torque control with a positive speed limit defined by the final speed demand. A negative resultant torque will give torque control with a negative speed limit of -5rpm.

Negative final speed demand:

A negative resultant torque will give torque control with a negative speed limit defined by the final speed demand. A positive resultant torque will give torque control with a positive speed limit of +5rpm.

Example of coiler operation:

This is an example of a coiler operating in the positive direction. The final speed demand is set to a positive value just above the coiler reference speed. If the resultant torque demand is positive the coiler operates with a limited speed, so that if the material breaks the speed does not exceed a level just above the reference. It is also possible to decelerate the coiler with a negative resultant torque demand. The coiler will decelerate down to -5rpm until a stop is applied. The operating area is shown in the following diagram.

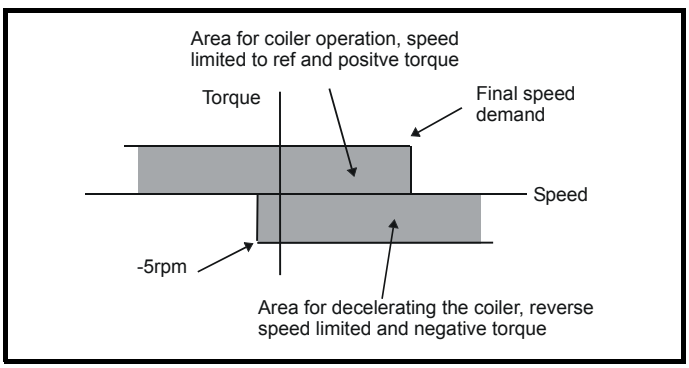

Example of uncoiler operation:

This is an example for an uncoiler operating in the positive direction. The final speed demand should be set to a level just above the maximum normal speed. When the resultant torque demand is negative the uncoiler will apply tension and try and rotate at 5rpm in reverse, and so take up any slack. The uncoiler can operate at any positive speed applying tension. If it is necessary to accelerate the uncoiler a positive

resultant torque demand is used. The speed will be limited to the final speed demand.

The operating area is the same as that for the coiler and is shown below:

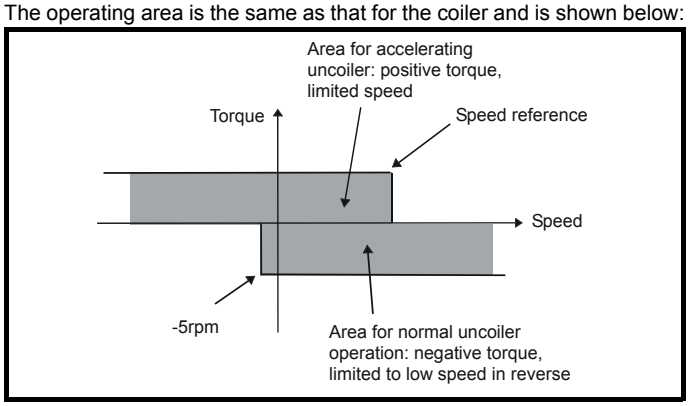

4: Speed control with torque feed-forward

The drive operates under speed control, but a torque value may be added to the output of the speed controller. This can be used to improve the regulation of systems where the speed loop gains need to be low for stability.

11.21.5 Stop modes

6.01		Stop mode								
RW		Txt							US	
OL	⇳	COASt (0), rP (1), rP.dcl (2), dcl (3), td.dcl (4), diSAbLE (5)					⇨	rP (1)		
VT		COASt (0), rP (1), no.rP (2)								
SV								no.rP (2)		

Open-loop

Stopping is in two distinct phases: decelerating to stop, and stopped.

Stopping Mode	Phase 1	Phase 2	Comments
0: Coast	Inverter disabled	Drive cannot be re-enabled for 1s	Delay in phase 2 allows rotor flux to decay
1: Ramp	Ramp down to zero frequency	Wait for 1s with inverter enabled	
2: Ramp followed by DC injection	Ramp down to zero frequency	Inject DC at level specified by Pr **6.06** for time defined by Pr **6.07**	
3: DC injection with zero speed detection	Low frequency current injection with detection of low speed before next phase	Inject DC at level specified by Pr **6.06** for time defined by Pr **6.07**	The drive automatically senses low speed and therefore it adjusts the injection time to suit the application. If the injection current level is too small the drive will not sense low speed (normally a minimum of 50-60% is required).
4: Timed DC injection braking stop	Inject DC at level specified by Pr **6.06** for time specified by Pr **6.07**		
5: Disable	Inverter disabled		Allows the drive to be immediately disabled and then re-enabled again immediately if required.

Once modes 3 or 4 have begun the drive must go through the ready state before being restarted either by stopping, tripping or being disabled.

If this parameter is set to DiASbLE (5), the disable stopping mode is used when the run command is removed. This mode will allow the drive to be started immediately by re-applying the run command. However, if the drive is disabled by removing the drive enable (i.e. via the Enable SAFE TORQUE OFF input or Pr **6.15** *Drive enable*) then the drive cannot be re-enabled for 1s.

Closed loop vector and Servo

Only one stopping phases exists and the ready state is entered as soon as the single stopping action is complete.

Stopping Mode	Action
0: Coast	Inhibits the inverter
1: Ramp	Stop with ramp
2: No ramp	Stop with no ramp

The motor can be stopped with position orientation after stopping. This mode is selected with the position controller mode parameter (Pr **13.10**). When this mode is selected Pr **6.01** has no effect.

6.06		Injection braking level								
RW		Uni					RA		US	
OL	⇳	0.0 to 150.0 %			⇨	100.0				

Defines the current level used during DC injection braking as a percentage of motor rated current as defined by Pr **5.07**.

6.07	Injection braking time								
RW	Uni							US	
OL	⇳	0.0 to 25.0 s			⇨	1.0			

Defines the time of injection braking during phase 1 with stopping modes 3 and 4, and during phase 2 with stopping mode 2 (see Pr **6.01**).When this bit is set the drive remains active even when the run command has been removed and the motor has reached standstill. The drive goes to the 'StoP' state instead of the 'rdy' state.

6.08	Hold zero speed								
RW	Bit							US	
OL	⇳	OFF (0) or On (1)			⇨	OFF (0)			
VT									
SV						On (1)			

When this bit is set the drive remains active even when the run command has been removed and the motor has reached standstill. The drive goes to the 'StoP' state instead of the 'rdy' state.

11.21.6 Line power supply loss modes

6.03	Line power supply loss mode								
RW	Txt							US	
⇳	diS (0), StoP (1), ridE.th (2)				⇨	diS (0)			

0: diS
There is no line power supply loss detection and the drive operates normally only as long as the DC bus voltage remains within specification (i.e. >Vuu). Once the voltage falls below Vuu an under-voltage 'UV' trip occurs. The under voltage trip will be reset automatically if the voltage rises above Vuu Restart, as stated in Table 11-8 on page 260.

1: StoP - Open-loop
The action taken by the drive is the same as for ride through mode, except the ramp down rate is at least as fast as the deceleration ramp setting and the drive will continue to decelerate and stop even if the line power supply is re-applied. If normal or timed injection braking is selected the drive will use ramp mode to stop on loss of the supply. If ramp stop followed by injection braking is selected, the drive will ramp to a stop and then attempt to apply dc injection. At this point, unless the line power supply has been restored, the drive is likely to initiate a trip.

1: StoP - Closed-loop vector or Servo
The speed reference is set to zero and the ramps are disabled allowing the drive to decelerate the motor to a stop under current limit. If the Line power supply is re-applied while the motor is stopping any run signal is ignored until the motor has stopped. If the current limit value is set very low level the drive may trip UV before the motor has stopped.

2: ridE.th
The drive detects line power supply loss when the DC bus voltage falls below Vml_1. The drive then enters a mode where a closed-loop controller attempts to hold the DC bus level at Vml_1. This causes the motor to decelerate at a rate that increases as the speed falls. If the line power supply is re-applied it will force the DC bus voltage above the detection threshold Vml_3 and the drive will continue to operate normally.

The output of the line power supply loss controller is a current demand that is fed into the current control system and therefore the gain Pr **4.13** and Pr **4.14** must be set up for optimum control. See parameters Pr **4.13** and Pr **4.14** for set-up details.

Table 11-8 shows the voltage levels used by drives with each voltage rating.

Table 11-8 DC bus voltage thresholds

Voltage level	200V drive	400V drive	575V drive	690V drive
Vuu	175	330	435	
Vml_1	205*	410*	540*	
Vml_2	Vml_1 - 10V	Vml_1 - 20V	Vml_1 - 25V	
Vml_3	Vml_1 + 10V	Vml_1 + 15V	Vml_1 + 50V	
Vuu Restart	215	425	590	

* Vml_1 is defined by Pr **6.48**. The values in the table above are the default values.

6.48	Line power supply loss ride through detection level								
RW	Uni					RA		US	
⇳	0 to DC_VOLTAGE_SET_MAX V				⇨	200V drive: 205 400V drive: 410 575V drive: 540 690V drive: 540			

The line power supply loss detection level can be adjusted using this parameter. If the value is reduced below the default value, the default value is used by the drive. If the level is set too high, so that the line power supply loss detection becomes active under normal operating conditions, the motor will coast to a stop.

4.13	Current loop P gain								
RW	Uni							US	
OL	⇳	0 to 30,000			⇨	All voltage ratings: 20			
CL	⇳				⇨	200V drive: 75 400V drive: 150 575V drive: 180 690V drive: 215			

4.14	Current loop I gain								
RW	Uni							US	
OL	⇳	0 to 30,000			⇨	All voltage ratings: 40			
CL	⇳				⇨	200V drive: 1,000 400V drive: 2,000 575V drive: 2,400 690V drive: 3,000			

Open-loop
These parameters control the proportional and integral gains of the current controller used in the open loop drive. As already mentioned the current controller either provides current limits or closed loop torque control by modifying the drive output frequency. The control loop is also used in its torque mode during line power supply loss, or when the controlled mode standard ramp is active and the drive is decelerating, to regulate the flow of current into the drive.

Although the default settings have been chosen to give suitable gains for less demanding applications it may be necessary for the user to adjust the performance of the controller. The following is a guide to setting the gains for different applications.

Current limit operation:

The current limits will normally operate with an integral term only, particularly below the point where field weakening begins. The proportional term is inherent in the loop. The integral term must be increased enough to counter the effect of the ramp which is still active even in current limit. For example, if the drive is operating at constant frequency and is overloaded the current limit system will try to reduce the output frequency to reduce the load. At the same time the ramp will try to increase the frequency back up to the demand level. If the integral gain is increased too far the first signs of instability will occur when operating around the point where field

weakening begins. These oscillations can be reduced by increasing the proportional gain. A system has been included to prevent regulation because of the opposite actions of the ramps and the current limit. This can reduce the actual level that the current limit becomes active by 12.5%. This still allows the current to increase up to the current limit set by the user. However the current limit flag (Pr **10.09**) could become active up to 12.5% below the current limit depending on the ramp rate used.

Torque control:

Again the controller will normally operate with an integral term only, particularly below the point where field weakening begins. The first signs of instability will appear around base speed, and can be reduced by increasing the proportional gain. The controller can be less stable in torque control mode rather than when it is used for current limiting. This is because load helps to stabilise the controller, and under torque control the drive may operate with light load. Under current limit the drive is often under heavy load unless the current limits are set at a low level.

Line power supply loss and controlled standard ramp:

The DC bus voltage controller becomes active if line power supply loss detection is enabled and the drive supply is lost or controlled standard ramp is being used and the machine is regenerating. The DC bus controller attempts to hold the DC bus voltage at a fixed level by controlling the flow of current from the drive inverter into its DC bus capacitors.

The output of the DC bus controller is a current demand which is fed into the current PI controller as shown in the following diagram.

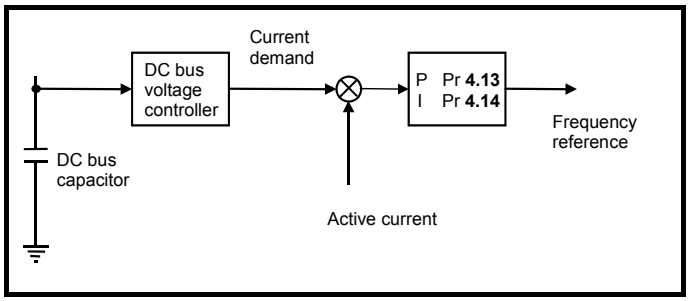

Although it is not usually necessary the DC bus voltage controller can be adjusted with Pr **5.31**. However, it may often be necessary to adjust the current controller gains to obtain the required performance. If the gains are not suitable it is best to set up the drive in torque control first. Set the gains to a value that does not cause instability around the point at which field weakening occurs. Then revert back to open loop speed control in standard ramp mode. To test the controller the supply should be removed while the motor is running. It is likely that the gains can be increased further if required because the DC bus voltage controller has a stabilising effect, provided that the drive is not required to operate in torque control mode.

Closed-loop vector and Servo

The Kp and Ki gains are used in the voltage based current controller. The default values give satisfactory operation with most motors. However it may be necessary to change the gains to improve the performance. The proportional gain (Pr **4.13**) is the most critical value in controlling the performance. Either the value can be set by auto-tuning (see Pr **5.12**) or it can be set by the user so that

Pr **4.13** = Kp = (L / T) x (I_{fs} / V_{fs}) x (256 / 5)

Where:

T is the sample time of the current controllers. The drive compensates for any change of sample time, and so it should be assumed that the sample time is equivalent to the lowest sample rate of 167µs.

L is the motor inductance. For a servo motor this is half the phase to phase inductance that is normally specified by the manufacturer. For an induction motor this is the per phase transient inductance (σL_s). This is the inductance value stored in Pr **5.24** after the autotune test is carried out. If σL_s cannot be measured it can be calculated from the steady state per-phase equivalent circuit of the motor as follows:

$$\sigma L_s = L_s - \left(\frac{L_m^2}{L_r}\right)$$

I_{fs} is the peak full scale current feedback = K_C x √2 / 0.45. Where K_C is defined in Table 11-5.

V_{fs} is the maximum DC bus voltage.

Therefore:

Pr **4.13** = Kp = (L / 167µs) x (K_C x √2 / 0.45 / V_{fs}) x (256 / 5)

= K x L x K_C

Where:

K = [√2 / (0.45 x V_{fs} x 167µs)] x (256 / 5)

Drive voltage rating	Vfs	K
200V	415V	2322
400V	830V	1161
575V	990V	973
690V	1190V	809

This set-up will give a step response with minimum overshoot after a step change of current reference. The approximate performance of the current controllers will be as given below. The proportional gain can be increased by a factor of 1.5 giving a similar increase in bandwidth, however, this gives at step response with approximately 12.5% overshoot.

Switching frequency kHz	Current control sample time µs	Gain bandwidth Hz	Phase delay µs
3	167	TBA	1160
4	125	TBA	875
6	83	TBA	581
8	125	TBA	625
12	83	TBA	415
16	125	TBA	625

The integral gain (Pr **4.14**) is less critical and should be set so that

Pr **4.14** = Ki = Kp x 256 x T / τ_m

Where:

τ_m is the motor time constant (L / R).

R is the per phase stator resistance of the motor (i.e. half the resistance measured between two phases).

Therefore

Pr **4.14** = Ki = (K x L x K_C) x 256 x 167µs x R / L

= 0.0427 x K x R x K_C

The above equation gives a conservative value of integral gain. In some applications where it is necessary for the reference frame used by the drive to dynamically follow the flux very closely (i.e. high speed closed-loop induction motor applications) the integral gain may need to have a significantly higher value.

11.21.7 Start / stop logic modes

6.04	**Start / stop logic select**								
RW	Uni							US	
⇳	0 to 4				⇨	0			

This parameter is provided to allow the user to select several predefined digital input routing macros to control the sequencer. When a value between 0 and 3 is selected the drive processor continuously updates the destination parameters for digital I/O T25, T26 and T27, and the enable sequencer latching bit (Pr **6.40**). When a value of 4 is selected the destination parameters for these digital I/O and Pr **6.40** can be modified by the user.

If Pr **6.04** is changed then a drive reset is required before the function of T25, T26 or T27 will become active.

Pr 6.04	T25 (Pr 8.22)	T26 (Pr 8.23)	T27 (Pr 8.24)	Pr 6.40
0	Pr **6.29** (Fast Disable)	Pr **6.30** (Run Forward)	Pr **6.32** (Run Reverse)	0 (Non Latching)
1	Pr **6.39** (Run Permit)	Pr **6.30** (Run Forward)	Pr **6.32** (Run Reverse)	1 (Latching)
2	Pr **6.29** (Fast Disable)	Pr **6.34** (Run)	Pr **6.33** (Fwd/Rev)	0 (Non Latching)
3	Pr **6.39** (Run Permit)	Pr **6.34** (Run)	Pr **6.33** (Fwd/Rev)	1 (Latching)
4	User programmable	User programmable	User programmable	User programmable

If Pr **6.04** has been set to a value of 0 to 3, then setting Pr **6.04** to 4 does not automatically reconfigure terminals T25, T26 and T27 to their default functions. To return terminals T25, T26 and T27 to their default functions, one of the following operations should be performed.

- Drive defaults should be restored. See section 5.8 *Restoring parameter defaults* on page 104 for details.
- Manually set Pr **6.04** to 4, Pr **6.40** to 0, Pr **8.22** to 10.33, Pr **8.23** to 6.30, and Pr **8.24** to 6.32.

Figure 11-49 Digital input connections when Pr 6.04 is set to 0 to 3

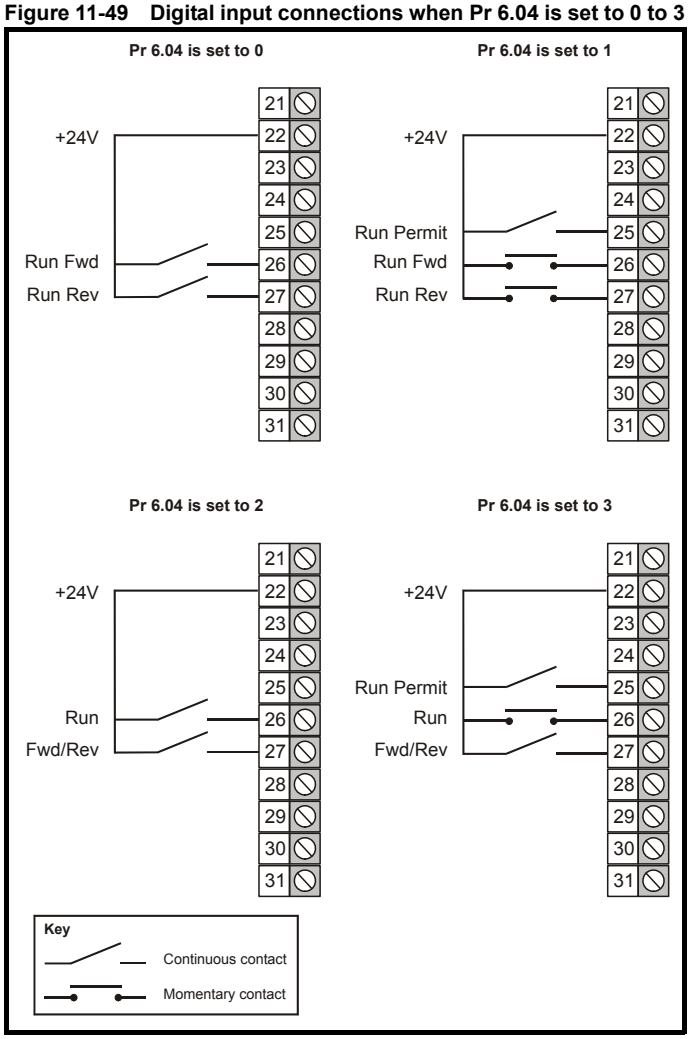

6.40	Enable sequencer latching								
RW	Bit							US	
⇳	OFF (0) or On (1)				⇨	OFF (0)			

This parameter enables sequencer latching. When sequencer latching is used, a digital input must be used as a run permit or not stop input. The digital input should write to Pr **6.39**. The run permit or not stop input must be made active to allow the drive to run. Making the run permit or not stop input inactive resets the latch and stops the drive.

11.21.8 Catch a spinning motor

6.09	Catch a spinning motor								
RW	Uni							US	
OL	⇳	0 to 3			⇨	0			
CL		0 to 1				1			

Open-loop

When the drive is enabled with this parameter at zero, the output frequency starts at zero and ramps to the required reference. When the drive is enabled with this parameter at a non-zero value, the drive performs a start-up test to determine the motor speed and then sets the initial output frequency to the synchronous frequency of the motor.

The test is not carried out and the motor frequency starts at zero if one of the following is true.

- The run command is given when the drive is in the stop state
- The drive is first enabled after power-up with Ur_I voltage mode (Pr **5.14** = Ur_I).
- The run command is given with Ur_S voltage mode (Pr **5.14** = Ur_S).

With default parameters the length of the test is approximately 250ms, however, if the motor has a long rotor time constant (usually large motors) it may be necessary to extend the test time. The drive will do this automatically if the motor parameters including the rated load rpm are set up correctly for the motor.

For the test to operate correctly it is important that the stator resistance (Pr **5.17** or Pr **21.12**) is set up correctly. This applies even if fixed boost (Pr **5.14** = Fd) or square law (Pr **5.14** = SrE) voltage mode is being used. The test uses the rated magnetizing current of the motor during the test, therefore the rated current (Pr **5.07**, Pr **21.07** and Pr **5.10**, Pr **21.10**) and power factor should be set to values close to those of the motor, although these parameters are not as critical as the stator resistance. For larger motors it may be necessary to increase Pr **5.40** *Spin start boost* from its default value of 1.0 for the drive to successfully detect the motor speed.

It should be noted that a stationary lightly loaded motor with low inertia might move slightly during the test. The direction of the movement is undefined. Restrictions may be placed on the direction of this movement and on the frequencies detected by the drive as follows:

Pr 6.09	Function
0	Disabled
1	Detect all frequencies
2	Detect positive frequencies only
3	Detect negative frequencies only

Closed-loop vector and Servo

When the drive is enabled with this bit at zero, the post ramp reference (Pr **2.01**) starts at zero and ramps to the required reference. When the drive is enabled with this bit at one, the post ramp reference is set to the motor speed.

When closed-loop vector mode is used without position feedback, and catch a spinning motor is not required, this parameter should be set to

zero as this avoids unwanted movement of the motor shaft when zero speed is required. When closed-loop vector mode without position feedback is used with larger motors it may be necessary to increase Pr **5.40** *Spin start boost* from its default value of 1.0 for the drive to successfully detect the motor speed.

5.40		**Spin start boost**							
RW	Uni							US	
OL	⇳	0.0 to 10.0			⇨	1.0			
VT									

If Pr **6.09** is set to enable the catch a spinning motor function in open-loop mode or closed-loop vector mode without position feedback, (Pr **3.24** = 1 or 3) this parameter defines a scaling function used by the algorithm that detects the speed of the motor.It is likely that for smaller motors the default value of 1.0 is suitable, but for larger motors this parameter may need to be increased. If the value of this parameter is too large the motor may accelerate from standstill when the drive is enabled. If the value of this parameter is too small the drive will detect the motor speed as zero even if the motor is spinning.

11.21.9 Position modes

13.10		**Position controller mode**							
RW	Uni							US	
OL	⇳	0 to 2			⇨	0			
CL		0 to 6							

This parameter is used to set the position controller mode as shown in the table below.

Parameter value	Mode	Feed forward active
0	Position controller disabled	
1	Rigid position control	✓
2	Rigid position control	
3	Non-rigid position control	✓
4	Non-rigid position control	
5	Orientation on stop	
6	Orientation on stop and when drive enabled	

Rigid position control

In rigid position control the position error is always accumulated. This means that, if for example, the slave shaft is slowed down due to excessive load, the target position will eventually be recovered by running at a higher speed when the load is removed.

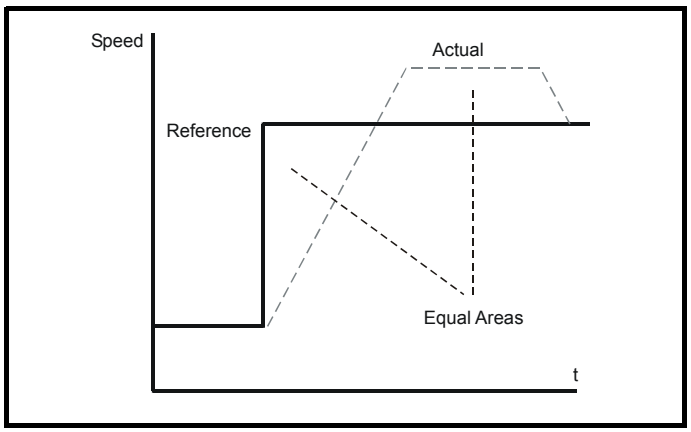

Non-rigid position control

In non-rigid position control the position loop is only active when the 'At Speed' condition is met (see Pr **3.06**). This allows slippage to occur while the speed error is high.

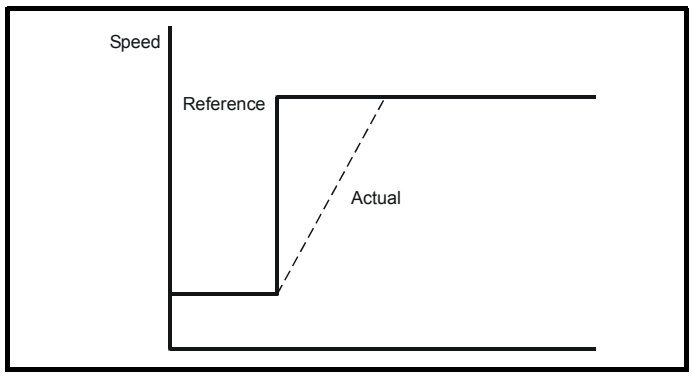

Velocity feed forward

The position controller can generate a velocity feed forwards value from the speed of the reference encoder. The feed-forwards value is passed to menu, and so ramps may be included if required. Because the position controller only has a proportional gain, it is necessary to use velocity feed-forwards to prevent a constant position error that would be proportional to the speed of the reference position.

If for any reason the user wishes to provide the velocity feed forward from a source other than the reference position, the feed forward system can be made inactive, i.e. Pr **13.10** = 2 or 4. The external feed forward can be provided via Menu 1 from any of the frequency/speed references. However, if the feed forward level is not correct a constant position error will exist.

Relative jogging

If relative jogging is enabled the feedback position can be made to move relative the reference position at the speed defined by Pr **13.17**.

Orientation

If Pr **13.10** is 5 the drive orientates the motor following a stop command. If hold zero speed is enabled (Pr **6.08** = 1) the drive remains in position control when orientation is complete and hold the orientation position. If hold zero speed is not enabled the drive is disabled when orientation is complete.

If Pr **13.10** is 6 the drive orientates the motor following a stop command and whenever the drive is enabled provided that hold zero speed is enabled (Pr **6.08** = 1). This ensures that the spindle is always in the same position following the drive being enabled.

When orientating from a stop command the drive goes through the following sequence:

1. The motor is decelerated or accelerated to the speed limit programmed in Pr **13.12**, using ramps if these are enabled, in the direction the motor was previously running.
2. When the ramp output reaches the speed set in Pr **13.12**, ramps are disabled and the motor continues to rotate until the position is found to be close to the target position (i.e. within 1/32 of a revolution). At this point the speed demand is set to 0 and the position loop is closed.
3. When the position is within the window defined by Pr **13.14**, the orientation complete indication is given in Pr **13.15**.

The stop mode selected by Pr **6.01** has no effect if orientation is enabled.

11.21.10 Fast Disable

Software V01.10.00 and later

6.29	Hardware enable								
RO	Bit					NC	PT		
⇳	OFF (0) or On (1)				⇨				

This bit is a duplicate of Pr **8.09** and reflects the state of the enable input.With software V01.10.00 and later, if the destination of one of the drive digital I/O (Pr **8.21** to Pr **8.26**) is set to Pr **6.29** and the I/O is set as an input, the state of the input does not affect the value of this parameter as it is protected, however, it does provide a fast disable function.

The SAFE TORQUE OFF input to the drive (T31) disables the drive in hardware by removing the gate drive signals from the inverter IGBT's and also disables the drive via the software system. When the drive is disabled by de-activating the SAFE TORQUE OFF input (T31) there can be a delay of up to 20ms (typically 8ms) before the drive is disabled. However, if a digital I/O is set up to provide the fast disable function it is possible to disable the drive within 600μs of de-activating the input. To do this an enable signal should be given to both the SAFE TORQUE OFF input (T31) and to the digital I/O selected for the fast disable function. The state of the digital I/O including the effect of its associated invert parameter is ANDed with the SAFE TORQUE OFF (T31) to enable the drive.



If the safety function of the SAFE TORQUE OFF input is required then there must not be a direct connection between the SAFE TORQUE OFF input (T31) and any other digital I/O on the drive. If the safety function of the SAFE TORQUE OFF input and the fast disable function is required then the drive should be given two separate independent enable signals. A safety related enable from a safe source connected to the SAFE TORQUE OFF input on the drive. A second enable connected to the digital I/O on the drive selected for the fast disable function. The circuit must be arranged so that a fault which causes the fast input to be forced high cannot cause the SAFE TORQUE OFF input to be forced high, including the case where a component such as a blocking diode has failed.

12 Technical Data

12.1 Drive technical data

12.1.1 Power and current ratings (Derating for switching frequency and temperature)

For a full explanation of 'Normal Duty' and 'Heavy Duty' refer to section 2.1 *Ratings* on page 13.

Table 12-1 Maximum permissible continuous output current @ 40°C (104°F) ambient

Model	Normal Duty								Heavy Duty							
	Nominal rating		Maximum permissible continuous output current (A) for the following switching frequencies						Nominal rating		Maximum permissible continuous output current (A) for the following switching frequencies					
	kW	hp	3kHz	4kHz	6kHz	8kHz	12kHz	16kHz	kW	hp	3kHz	4kHz	6kHz	8kHz	12kHz	16kHz
SP0201*	0.37	0.5	2.2						0.37	0.5	2.2					
SP0202*	0.55	0.75	3.1						0.55	0.75	3.1					
SP0203*	0.75	1.0	4.0						0.75	1.0	4.0					
SP0204*	1.1	1.5	5.7						1.1	1.5	5.7					
SP0205*	1.5	2.0	7.5						1.5	2.0	7.5					
SP1201	1.1	1.5	5.2						0.75	1.0	4.3					
SP1202	1.5	2.0	6.8						1.1	1.5	5.8					
SP1203	2.2	3.0	9.6						1.5	2.0	7.5					
SP1204	3.0	3.0	11.0						2.2	3.0	10.6					
SP2201	4.0	5.0	15.5						3.0	3.0	12.6					
SP2202	5.5	7.5	22.0						4.0	5.0	17.0					
SP2203	7.5	10	28.0			27.9	24.8	21.8	5.5	7.5	25.0		24.2	22.5	19.6	17.2
SP3201	11	15	42.0						7.5	10	31.0					
SP3202	15	20	54.0				48.5		11	15	42.0				41.3	
SP4201	18.5	25	68.0						15	20	56.0					
SP4202	22	30	80.0						18.5	25	68.0					
SP4203	30	40	104						22	30	80.0					
SP5201	37	50	130						30	40	105					
SP5202	45	60	154			143.2			37	50	130		121.7	102.1		
SP0401*	0.37	0.5	1.3						0.37	0.5	1.3					
SP0402*	0.55	0.75	1.7						0.55	0.75	1.7					
SP0403*	0.75	1.0	2.1						0.75	1.0	2.1					
SP0404*	1.1	1.5	3.0					2.53	1.1	1.5	3.0					2.53
SP0405*	1.5	2.0	4.2				3.57	2.53	1.5	2.0	4.2				3.57	2.53
SP1401	1.1	1.5	2.8						0.75	1.0	2.1					
SP1402	1.5	2.0	3.8						1.1	1.5	3.0					
SP1403	2.2	3.0	5.0						1.5	2.0	4.2					
SP1404	3.0	5.0	6.9					5.9	2.2	3.0	5.8				5.4	4.3
SP1405	4.0	5.0	8.8				7.4	5.7	3.0	5.0	7.6				5.6	4.4
SP1406	5.5	7.5	11.0			10.0	7.4	5.7	4.0	5.0	9.5		9.2	7.7	5.6	4.4
SP2401	7.5	10	15.3				12.7	10.1	5.5	10	13.0			12.6	9.6	7.6
SP2402	11	15	21.0		19.5	16.7	12.7	10.0	7.5	10	16.5		14.9	12.6	9.6	7.6
SP2403	15	20	29.0	27.2	23.2	20.0	15.0	11.8	11	20	25.0	23.7	19.9	16.9	12.8	10.1
SP2404*	15	20	29.0		26.6	22.5	16.5	12.5	15	20	29.0	25.8	20.5	16.8	12.1	7.9
SP3401	18.5	25	35.0			30.3	22.4	17.4	15	25	32.0		30.3	25.3	18.6	14.5
SP3402	22	30	43.0		39.5	32.8	24.0	18.5	18.5	30	40.0		33.8	28.1	20.5	15.7
SP3403	30	40	56.0	48.7	39.5	32.8	24.0		22	30	46.0	41.8	33.8	28.1	20.5	
SP4401	37	50	68.0			62.0			30	50	60.0		51.9	42.4		
SP4402	45	60	83.0		74.0	63.0			37	60	74.0	65.0	51.9	42.4		
SP4403	55	75	104		95.1	78.8			45	75	96.0	83.6	66.6	55.2		
SP5401	75	100	138		118	97.1			55	100	124	106.5	82.4	67.0		
SP5402	90	125	168	158	129	107			75	125	156	137	109	91.0		
SP6401	110	150	205		164.1				90	150	180	174.4	134.5			
SP6402	132	200	236	210.4	157.7				110	150	210	174.8	129.7			
SP3501	3.0	3.0	5.4						2.2	2.0	4.1					
SP3502	4.0	5.0	6.1						3.0	3.0	5.4					
SP3503	5.5	7.5	8.4						4.0	5.0	6.1					
SP3504	7.5	10	11.0						5.5	7.5	9.5					
SP3505	11	15	16.0						7.5	10	12.0					
SP3506	15	20	22.0		21.6	18.2			11	15	18.0			15.5		
SP3507	18.5	25	27.0	26.0	21.6	18.1			15	20	22.0		18.4	15.5		
SP4601	18.5	25	22.0						15	20	19.0					
SP4602	22	30	27.0						18.5	25	22.0					
SP4603	30	40	36.0			33.9			22	30	27.0					
SP4604	37	50	43.0		41.3	33.7			30	40	36.0			33.9		
SP4605	45	60	52.0	51.9	41.2	33.7			37	50	43.0		41.3	33.7		
SP4606	55	75	62.0	61.3	48.4	39.6			45	60	52.0		44.7	36.5		
SP5601	75	100	84		69	54			55	75	63		52	41		
SP5602	90	125	99	91	69	54			75	100	85	69	52	41		
SP6601	110	150	125	100	74				90	125	100		74			
SP6602	132	175	144	100	74				110	150	125	100	74			

NOTE For the definition of ambient temperature, see section 3.7 *Enclosure design and drive ambient temperature* on page 49.

*See *Size 0 and SP2404 power and current ratings* on page 266.

Table 12-2 Maximum permissible continuous output current @ 40°C (104°F) ambient with IP54 insert and standard IP54 fan installed

Model	Normal Duty						Heavy Duty					
	Maximum permissible continuous output current (A) for the following switching frequencies						Maximum permissible continuous output current (A) for the following switching frequencies					
	3kHz	4kHz	6kHz	8kHz	12kHz	16kHz	3kHz	4kHz	6kHz	8kHz	12kHz	16kHz
SP1201	5.2						4.3					
SP1202	6.8						5.8					
SP1203	9.6			9.3	8.2	7.3	7.5					7.3
SP1204	11.0	10.6	9.7	9.0	7.7	6.6	10.6	10.5	9.7	9.0	7.7	6.6
SP2201	15.5						12.6					
SP2202	22.0			20.7	18.0	15.7	17.0					15.5
SP2203	24.5	23.7	22.0	20.5	17.9	15.6	24.2	23.4	21.8	20.3	17.7	15.5
SP1401	2.8						2.1					
SP1402	3.8					2.9	3.0					2.9
SP1403	5.0				3.9	2.9	4.2				3.9	2.9
SP1404	6.9		6.5	5.4	3.9	2.9	5.8			5.4	3.9	2.9
SP1405	8.3	7.3	5.8	4.7	3.2	2.3	7.6	7.3	5.8	4.7	3.2	2.3
SP1406	8.3	7.3	5.8	4.7	3.2	2.3	8.2	7.3	5.8	4.7	3.2	2.3
SP2401	15.3			13.3	10.1	7.9	13.0			12.6	9.4	7.3
SP2402	20.1	18.4	15.6	13.4	10.1	7.9	16.5		14.9	12.3	9.3	7.2
SP2403	21.7	19.7	16.4	13.9	10.2	7.7	21.6	19.6	16.4	13.8	10.2	7.7
SP2404*	20.1	17.7	14.0	11.2	7.3	4.6	20.1	17.7	14.0	11.2	7.3	4.6

*See *Size 0 and SP2404 power and current ratings* on page 266.

NOTE

For the definition of ambient temperature, see section 3.7 *Enclosure design and drive ambient temperature* on page 49.

Size 0 and SP2404 power and current ratings

All drive models are dual rated except for size 0 and model SP2404 which only have a Heavy Duty rating. However, if the current limits in **4.05** to Pr **4.07** are set to a maximum of 110% and the switching frequency is greater than 3kHz, then the drive can be used at a maximum continuous current higher than the Heavy Duty rating. See the Normal Duty ratings in Table 12-1, Table 12-2 and Table 12-3. Normal Duty ratings exist for the size 0 and SP2404 above 3kHz when the overload is reduced from the default value 165% in open loop or 175% in closed loop, to 110%.

If the current limits in Pr **4.05** to Pr **4.07** are set higher than 110% then the Heavy Duty current ratings are applicable.

Table 12-3 Maximum permissible continuous output current @ 50°C (122°F) ambient

Model	Normal Duty						Heavy Duty					
	Maximum permissible continuous output current (A) for the following switching frequencies						Maximum permissible continuous output current (A) for the following switching frequencies					
	3kHz	4kHz	6kHz	8kHz	12kHz	16kHz	3kHz	4kHz	6kHz	8kHz	12kHz	16kHz
SP0201*	2.2						2.2					
SP0202*	3.1						3.1					
SP0203*	4.0						4.0					
SP0204*	5.7						5.7					
SP0205*	7.5					6.6	7.5					6.6
SP1201	5.2						4.3					
SP1202	6.8						5.8					
SP1203	9.6					9.0	7.5					
SP1204	11.0			10.9	9.5	8.3	10.6				9.5	8.3
SP2201	15.5				13.5	11.5	12.6					11.4
SP2202	19.7	18.9	17.3	15.9	13.5	11.5	17.0			15.7	13.4	11.4
SP2203	19.5	18.6	17.2	15.8	13.4	11.5	19.2	18.4	17.0	15.7	13.3	11.4
SP3201	42.0				38.2		31.0					
SP3202	54.0		52.8	47.0	38.2		42.0				37.2	
SP4201	68.0						56.0					
SP4202	80.0						68.0					
SP4203	87.4						80.0					
SP5201	130.0						105.0			96.1		
SP5202	143.0			129.2			130.0		110.1	92.3		
SP0401*	1.3						1.3					1.28
SP0402*	1.7						1.7					1.61
SP0403*	2.1						2.1					1.91
SP0404*	3.0					2.08	3.0					2.08
SP0405*	4.2				3.02	2.08	4.2				3.02	2.08
SP1401	2.8						2.1					
SP1402	3.8						3.0					
SP1403	5.0					3.9	4.2					3.8
SP1404	6.9				5.1	3.9	5.8				4.8	3.7
SP1405	8.8		7.3	6.0	4.2	3.1	7.6		7.2	6.0	4.2	3.1
SP1406	10.1	9.0	7.3	6.0	4.2	3.1	9.5	9.0	7.2	6.0	4.2	3.1
SP2401	15.3	14.2	11.8	10.0	7.3	5.5	13.0		11.7	9.9	7.3	5.5
SP2402	15.7	14.2	11.8	10.0	7.3	5.5	15.5	14.1	11.7	9.9	7.3	5.5
SP2403	16.8	15.0	12.2	10.1	7.1		16.7	15.0	12.2	10.1	7.1	5.1
SP2404*	22.3	19.8	15.8	12.8	8.6	5.9	22.3	19.8	14.0	11.2	7.3	4.6
SP3401	35.0		31.0	25.8	18.7	14.2	32.0		27.4	22.8	16.7	12.9
SP3402	43.0	39.5	31.6	26.0	18.5	13.8	40.0	37.9	30.1	25.0	17.6	12.5
SP3403	44.5	39.5	31.6	26.0	18.5		42.8	37.9	30.0	24.7	18.1	
SP4401	68.0		66.8	54.9			60.0		46.7	38.3		
SP4402	83.0	81.6	66.8	54.9			68.2	60.0	46.7	38.3		
SP4403	86.5	86.2	71.3	59.3			86.5	74.7	60.1	49.8		
SP5401	138		105.9	87.4			112.7	96.4	74.5	59.9		
SP5402	141	140	112	92			140	123	99.0	82.0		
SP6401	191.5	190.1	147.6				180	157.9	121.5			
SP6402	198.4	180.6	138.1				190	157.9	116.2			
SP3501	5.4						4.1					
SP3502	6.1						5.4					
SP3503	8.4						6.1					
SP3504	11.0						9.5					
SP3505	16.0			14.7			12.0					
SP3506	22.0		17.8	14.7			18.0		16.8	13.9		
SP3507	24.6	22.0	17.8	14.7			22.0	20.4	16.7	13.9		
SP4601	22.0						19.0					
SP4602	27.0			24.7			22.0					
SP4603	36.0		30.7	24.7			27.0					
SP4604	43.0	39.6	30.7	24.7			36.0		30.7	24.7		
SP4605	45.6	39.5	30.7	24.7			43.0	39.6	30.7	24.7		
SP4606	51.9	44.9	34.7	27.7			51.9	44.9	34.7	27.7		
SP5601	83	69	51	40			63		47	38		
SP5602	83	69	51	40			75	62	45	36		
SP6601	98	81	59				98	81	59			
SP6602	98	81	59				98	81	59			

NOTE

For the definition of ambient temperature, see section 3.7 *Enclosure design and drive ambient temperature* on page 49.

*See *Size 0 and SP2404 power and current ratings* on page 266.

12.1.2 Power dissipation

Table 12-4 Losses @ 40°C (104°F) ambient

Model	Drive losses (W) taking into consideration any current derating for the given conditions															
	Normal Duty								Heavy Duty							
	Nominal rating		3kHz	4kHz	6kHz	8kHz	12kHz	16kHz	Nominal rating		3kHz	4kHz	6kHz	8kHz	12kHz	16kHz
	kW	hp							kW	hp						
SP0201	0.37	0.5	60				70		0.37	0.5	60				70	
SP0202	0.55	0.75	60		70			80	0.55	0.75	60		70			80
SP0203	0.75	1.0	70			80		90	0.75	1.0	70			80		90
SP0204	1.1	1.5	90				100	110	1.1	1.5	90				100	110
SP0205	1.5	2.0	100			110	120	130	1.5	2.0	100			110	120	130
SP1201	1.1	1.5	73	75	78	82	89	96	0.75	1	67	69	72	75	81	87
SP1202	1.5	2.0	85	87	91	96	104	113	1.1	1.5	78	80	83	87	95	102
SP1203	2.2	3.0	107	110	116	121	132	144	1.5	2.0	91	93	98	102	111	121
SP1204	3.0	3.0	118	122	129	137	153	169	2.2	3.0	115	118	126	134	149	164
SP2201	4.0	5.0	155	161	173	186	210	235	3.0	3.0	133	139	150	160	182	203
SP2202	5.5	7.5	210	218	234	250	282	314	4.0	5.0	170	176	190	203	229	256
SP2203	7.5	10	272	282	302	320		315	5.5	7.5	245	254	263	261	259	258
SP3201	11	15	331	347	380	412	477		7.5	10	260	272	297	321	370	
SP3202	15	20	431	451	492	532	551		11	15	349	365	398	430	486	
SP4201	18.5	25	517	541	589	637			15	20	428	448	488	528		
SP4202	22	30	611	639	694	750			18.5	25	517	541	589	637		
SP4203	30	40	810	845	916	987			22	30	611	639	694	750		
SP5201	37	50	1250	1340	1540	1730			30	40	1000	1080	1240	1400		
SP5202	45	60	1500	1620	1840	1910			37	50	1250	1340	1440	1360		
SP0401	0.37	0.5	50		60		70		0.37	0.5	50		60		70	
SP0402	0.55	0.75	50		60		70	80	0.55	0.75	50		60		70	80
SP0403	0.75	1.0	60		70		80	90	0.75	1.0	60		70		80	90
SP0404	1.1	1.5	70		80	90	110	120	1.1	1.5	70		80	90	110	120
SP0405	1.5	2.0	80	90	100	110	120		1.5	2.0	80	90	100	110	120	
SP1401	1.1	1.5	66	69	77	85	101	116	0.75	1.0	60	64	70	77	91	104
SP1402	1.5	2.0	74	78	88	97	116	135	1.1	1.5	67	71	79	88	104	120
SP1403	2.2	3.0	84	90	101	112	135	157	1.5	2.0	77	82	92	102	122	142
SP1404	3.0	5.0	102	109	123	137	166	174	2.2	3.0	92	98	110	123	141	144
SP1405	4.0	5.0	123	134	157	179	196	197	3.0	5.0	112	122	141	161	163	165
SP1406	5.5	7.5	146	160	187	198	196	197	4.0	5.0	131	143	163			165
SP2401	7.5	10	186	202	234	266	283	282	5.5	10	164	178	206	229		231
SP2402	11	15	248	269	291	286	283	281	7.5	10	201	218	230	229		231
SP2403	15	20	313	320			315	316	11	20	272	282	279	278	279	282
SP2404	15	20	311	343	376				15	20	311	308	301	299	302	284
SP3401	18.5	25	384	420	490	489	471	462	15	25	356	388	431	418	406	402
SP3402	22	30	461	503	541	521	500	491	18.5	30	433	473	470	455	441	435
SP3403	30	40	583	563	535	517	498		22	30	500	494	470	455	441	
SP4401	37	50	714	781	914	956			30	50	629	689	704	674		
SP4402	45	60	882	961	995	970			37	60	780	745	704	674		
SP4403	55	75	1070	1158	1217	1144			45	75	976	920	854	821		
SP5401	75	100	1471	1618	1640	1560			55	100	1311	1236	1150	1112		
SP5402	90	125	1830	1881	1781	1717			75	125	1681	1600	1508	1464		
SP6401	110	150	2058	2259	2153				90	150	1817	1935	1772			
SP6402	132	200	2477	2455	2255				110	150	2192	2042	1888			
SP3501	3.0	3.0	127	141	168	196			2.2	2.0	112	124	148	172		
SP3502	4.0	5.0	135	150	180	209			3.0	3.0	127	141	168	196		
SP3503	5.5	7.5	163	181	218	254			4.0	5.0	135	150	180	209		
SP3504	7.5	10	197	219	263	306			5.5	7.5	178	198	237	276		
SP3505	11	15	267	296	354	412			7.5	10	212	235	281	328		
SP3506	15	20	362	399	475	471			11	15	300	332	396	405		
SP3507	18.5	25	448	486	477	471			15	20	365	403	406	405		
SP4601	18.5	25	409	470	590	711			15	20	360	413	519	625		
SP4602	22	30	496	568	712	857			18.5	25	409	470	590	711		
SP4603	30	40	660	754	941	1063			22	30	496	568	712	857		
SP4604	37	50	798	908	1083	1058			30	40	660	754	941	1063		
SP4605	45	60	985	1115	1080	1058			37	50	798	908	1083	1058		
SP4606	55	75	1060	1179	1130	1105			45	60	873	987	1042	1023		
SP5601	75	100	1818	2129	2258	2203			55	75	1345	1585	1763	1757		
SP5602	90	125	2176	2320	2215	2189			75	100	1792	1744	1714	1706		
SP6601	110	150	2573	2512	2438				90	125	2573	2512	2438			
SP6602	132	175	3106	2512	2438				110	150	3106	2512	2438			

Table 12-5 Losses @ 40°C (104°F) ambient with IP54 insert and standard IP54 fan installed

Model	Drive losses (W) taking into consideration any current derating for the given conditions											
	Normal Duty						Heavy Duty					
	3kHz	4kHz	6kHz	8kHz	12kHz	16kHz	3kHz	4kHz	6kHz	8kHz	12kHz	16kHz
SP1201	73	75	78	82	89	96	67	69	72	75	81	87
SP1202	85	87	91	96	104	113	78	80	83	87	95	102
SP1203	107	110	116	118			91	93	98	102	111	118
SP1204	118						115	118				
SP2201	155	161	173	186	210	235	133	139	150	160	182	203
SP2202	210	218	234	237			170	176	190	203	229	237
SP2203	237						237					
SP1401	66	69	77	85	101	116	60	64	70	77	91	104
SP1402	74	78	88	97	116	118	67	71	79	88	104	118
SP1403	84	90	101	112	118		77	82	92	102	118	
SP1404	102	109	118				92	98	110	118		
SP1405	118						112	118				
SP1406	118						118					
SP2401	186	202	234	237			164	178	206	229	226	
SP2402	237						201	218	230	224		223
SP2403	237						237					
SP2404	225					220	225					220

Table 12-6 Losses @ 50°C (122°F) ambient

Model	Drive losses (W) taking into consideration any current derating for the given conditions											
	Normal Duty						Heavy Duty					
	3kHz	4kHz	6kHz	8kHz	12kHz	16kHz	3kHz	4kHz	6kHz	8kHz	12kHz	16kHz
SP0201	60				70		60				70	
SP0202	60		70			80	60		70			80
SP0203	70			80		90	70			80		90
SP0204	90				100	110	90				100	110
SP0205	100			110	120		100			110	120	
SP1201	73	75	78	82	89	96	67	69	72	75	81	87
SP1202	85	87	91	96	104	113	78	80	83	87	95	102
SP1203	107	110	116	121	132	137	91	93	98	102	111	121
SP1204	118	122	129	137			115	118	126	134	137	
SP2201	155	161	173	186	190		133	139	150	160	182	190
SP2202	190						170	176	190			
SP2203	190						190					
SP3201	331	347	380	412	436		260	272	297	321	370	
SP3202	431	451	480	463	439		349	365	398	430	439	
SP4201	517	541	589	637			428	448	488	528		
SP4202	611	639	694	750			517	541	589	637		
SP4203	671	701	761	821			611	639	694	750		
SP5201	1250	1340	1540	1730			1000	1080	1240	1290		
SP5202	1380	1490	1700	1720			1250	1340	1300	1240		
SP0401	50		60		70		50		60		70	
SP0402	50		60		70	80	50		60		70	80
SP0403	60		70		80	90	60		70		80	
SP0404	70		80	90	110		70		80	90	110	
SP0405	80	90	100	110			80	90	100	110		
SP1401	66	69	97	85	101	116	60	64	70	77	91	104
SP1402	74	78	88	97	116	135	67	71	79	88	104	120
SP1403	84	90	101	112	135	137	77	82	92	102	122	135
SP1404	102	109	123	137			92	98	110	123	132	
SP1405	123	134	137				112	122	137			
SP1406	137						131	137				
SP2401	186	190					164	178	190			
SP2402	190						190					
SP2403	190						190					
SP2404	245						245					229
SP3401	384	420	437	423	407	396	356	388	393	382	372	369
SP3402	461	462	439	424	406	396	433	448	423	412	392	372
SP3403	470	456	436	422	405		464	448	422	408	400	
SP4401	714	781	898	852			629	689	638	617		
SP4402	882	944	898	852			716	689	638	617		
SP4403	877	949	912	875			876	820	775	750		
SP5401	1471	1616	1462	1411			1186	1118	1047	1009		
SP5402	1500	1644	1543	1480			1500	1434	1366	1333		
SP6401	1942	2118	1939				1817	1747	1610			
SP6402	2068	2108	1997				1979	1851	1715			
SP3501	127	141	168	196			112	124	148	172		
SP3502	135	150	180	209			127	141	168	196		
SP3503	163	181	218	254			135	150	180	209		
SP3504	197	219	263	306			178	198	237	276		
SP3505	267	296	354	383			212	235	281	328		
SP3506	362	399	390	384			300	332	372	369		
SP3507	405	399	390	384			365	374	369			
SP4601	409	470	590	711			360	413	519	625		
SP4602	496	568	712	789			409	470	590	711		
SP4603	660	754	805	789			496	568	712	789		
SP4604	798	831	805	789			660	754	805	789		
SP4605	850	831	805	789			798	831	805	789		
SP4606	871	848	816	797			871	848	816	797		
SP5601	1785	1743	1689	1657			1345	1585	1763	1757		
SP5602	1785	1743	1689	1657			1609	1557	1502	1504		
SP6601	2084	2036	1978				2084	2036	1978			
SP6602	2084	2036	1978				2084	2036	1978			

Table 12-7 Power losses from the front of the drive when through-panel mounted

Frame size	Power loss
1	≤50W
2	≤75W
3	≤100W
4	≤204W
5	≤347W
6	≤480W

12.1.3 Supply requirements

Voltage:

SPX2XX 200V to 240V ±10%
SPX4XX 380V to 480V ±10%
SPX5XX 500V to 575V ±10%
SPX6XX 500V to 690V ±10%

Number of phases: 3*

* 200V size 0 drives can also be used on a single phase supply.

Maximum supply imbalance: 2% negative phase sequence (equivalent to 3% voltage imbalance between phases).

Frequency range: 48 to 65 Hz

For UL compliance only, the maximum supply symmetrical fault current must be limited to 100kA

Size 6 heatsink fan supply requirements

Nominal voltage:	24V
Minimum voltage:	23.5V
Maximum voltage:	27V
Current drawn:	3.3A
Recommended power supply:	24V, 100W, 4.5A
Recommended fuse:	4A fast blow (I^2t less than $20A^2s$)

12.1.4 Line reactors

Input line reactors reduce the risk of damage to the drive resulting from poor phase balance or severe disturbances on the supply network.

Where line reactors are to be used, reactance values of approximately 2% are recommended. Higher values may be used if necessary, but may result in a loss of drive output (reduced torque at high speed) because of the voltage drop.

For all drive ratings, 2% line reactors permit drives to be used with a supply unbalance of up to 3.5% negative phase sequence (equivalent to 5% voltage imbalance between phases).

Severe disturbances may be caused by the following factors, for example:

- Power factor correction equipment connected close to the drive.
- Large DC drives having no or inadequate line reactors connected to the supply.
- Across the line (DOL) started motor(s) connected to the supply such that when any of these motors are started, the voltage dip exceeds 20%

Such disturbances may cause excessive peak currents to flow in the input power circuit of the drive. This may cause nuisance tripping, or in extreme cases, failure of the drive.

Drives of low power rating may also be susceptible to disturbance when connected to supplies with a high rated capacity.

Line reactors are particularly recommended for use with the following drive models when one of the above factors exists, or when the supply capacity exceeds 175kVA:

SP0201 SP0202 SP0203 SP0204 SP0205
SP0401 SP0402 SP0403 SP0404 SP0405
SP1201 SP1202 SP1203 SP1204
SP1401 SP1402 SP1403 SP1404

Model sizes SP1405 to SP4606 have an internal DC choke and SP5201 to SP6602 have internal AC line chokes, so they do not require AC line reactors except for cases of excessive phase unbalance or extreme supply conditions.

When required each drive must have its own reactor(s). Three individual reactors or a single three-phase reactor should be used.

Reactor current ratings

The current rating of the line reactors should be as follows:

Continuous current rating:
Not less than the continuous input current rating of the drive

Repetitive peak current rating:
Not less than twice the continuous input current rating of the drive

12.1.5 Motor requirements

No. of phases: 3

Maximum voltage:
Unidrive SP (200V): 240V
Unidrive SP (400V): 480V
Unidrive SP (575V): 575V
Unidrive SP (690V): 690V

12.1.6 Temperature, humidity and cooling method

Ambient temperature operating range:
0°C to 50°C (32°F to 122°F).
Output current derating must be applied at ambient temperatures >40°C (104°F).

Minimum temperature at power-up:
-15°C (5°F), the supply must be cycled when the drive has warmed up to 0°C (32°F).

Cooling method: Forced convection

Maximum humidity: 95% non-condensing at 40°C (104°F)

12.1.7 Storage

-40°C (-40°F) to +50°C (122°F) for long term storage, or to +70°C (158°F) for short term storage.

Storage time is 2 years.

Electrolytic capacitors in any electronic product have a storage period after which they require reforming or replacing.

The DC bus capacitors have a storage period of 10 years.

The low voltage capacitors on the control supplies typically have a storage period of 2 years and are thus the limiting factor.

Low voltage capacitors cannot be reformed due to their location in the circuit and thus may require replacing if the drive is stored for a period of 2 years or greater without power being applied.

It is therefore recommended that drives are powered up for a minimum of 1 hour after every 2 years of storage.

This process allows the drive to be stored for a further 2 years.

12.1.8 Altitude

Altitude range: 0 to 3,000m (9,900 ft), subject to the following conditions:

1,000m to 3,000m (3,300 ft to 9,900 ft) above sea level: de-rate the maximum output current from the specified figure by 1% per 100m (330 ft) above 1,000m (3,300 ft)

For example at 3,000m (9,900ft) the output current of the drive would have to be de-rated by 20%.

12.1.9 IP / UL Rating

The Unidrive SP is rated to IP20 pollution degree 2 (dry, non-conductive contamination only) (NEMA 1). However, it is possible to configure the drive to achieve IP54 rating (NEMA 12) at the rear of the heatsink for through-panel mounting (some current derating is required).

In order to achieve the high IP rating at the rear of the heatsink with Unidrive SP size 1 and 2, it is necessary to seal a heatsink vent by installing the IP54 insert as shown in Figure 3-6 and Figure 3-7 on page 32. For increased fan life time in a dirty environment the heatsink fan must be replaced with an IP54 rated fan on size 1 to 4. Sizes 5 and 6 are installed with IP54 heatsink fans as standard. Contact the supplier of the drive for details.

Installing of the IP54 insert and/or IP54 rated fan on sizes 1 and 2 requires output current derating to be applied, see section 12.1.1 *Power and current ratings (Derating for switching frequency and temperature)* on page 265 for further details.

The IP rating of a product is a measure of protection against ingress and contact to foreign bodies and water. It is stated as IP XX, where the two digits (XX) indicate the degree of protection provided as shown in Table 12-8.

Table 12-8 IP Rating degrees of protection

First digit		Second digit	
Protection against contact and ingress of foreign bodies		Protection against ingress of water	
0	No protection	0	No protection
1	Protection against large foreign bodies ϕ > 50mm (large area contact with the hand)	1	Protection against vertically falling drops of water
2	Protection against medium size foreign bodies ϕ > 12mm (finger)	2	Protection against spraywater (up to 15° from the vertical)
3	Protection against small foreign bodies ϕ > 2.5mm (tools, wires)	3	Protection against spraywater (up to 60° from the vertical)
4	Protection against granular foreign bodies ϕ > 1mm (tools, wires)	4	Protection against splashwater (from all directions)
5	Protection against dust deposit, complete protection against accidental contact.	5	Protection against heavy splash water (from all directions, at high pressure)
6	Protection against dust ingress, complete protection against accidental contact.	6	Protection against deckwater (e.g. in heavy seas)
7	-	7	Protection against immersion
8	-	8	Protection against submersion

Table 12-9 UL enclosure ratings

UL rating	Description
Type 1	Enclosures are intended for indoor use, primarily to provide a degree of protection against limited amounts of falling dirt.
Type 12	Enclosures are intended for indoor use, primarily to provide a degree of protection against dust, falling dirt and dripping non-corrosive liquids.

12.1.10 Corrosive gasses

Concentrations of corrosive gases must not exceed the levels given in:

- Table A2 of EN 50178:1998
- Class 3C2 of IEC 60721-3-3

This corresponds to the levels typical of urban areas with industrial activities and/or heavy traffic, but not in the immediate neighborhood of industrial sources with chemical emissions.

12.1.11 RoHS compliance

Unidrive SP size 0 meets EU directive 2002-95-EC for RoHS compliance.

12.1.12 Vibration

Maximum recommended continuous vibration level 0.14 g r.m.s. broad-band 5 to 200 Hz.

NOTE

This is the limit for broad-band (random) vibration. Narrow-band vibration at this level which coincides with a structural resonance could result in premature failure.

Bump Test

Testing in each of three mutually perpendicular axes in turn.
Referenced standard:IEC 60068-2-29: Test Eb:
Severity: 18g (size 1 to 3), 6ms, half sine
10g (size 4 to 6), 6ms, half sine
No. of Bumps: 600 (100 in each direction of each axis)

Random Vibration Test

Testing in each of three mutually perpendicular axes in turn.
Referenced standard:IEC 60068-2-64: Test Fh:
Severity: 1.0 m^2/s^3 (0.01 g^2/Hz) ASD from 5 to 20 Hz
-3 dB/octave from 20 to 200 Hz
Duration: 30 minutes in each of 3 mutually perpendicular axes.

Sinusoidal Vibration Test

Testing in each of three mutually perpendicular axes in turn.
Referenced standard: IEC 60068-2-6: Test Fc:
Frequency range: 5 to 500 Hz
Severity: 3.5 mm peak displacement from 5 to 9 Hz
10 m/s^2 peak acceleration from 9 to 200 Hz
15 m/s^2 peak acceleration from 200 to 500 Hz
Sweep rate: 1 octave/minute
Duration: 15 minutes in each of 3 mutually perpendicular axes.

12.1.13 Starts per hour

By electronic control: unlimited

By interrupting the AC supply: ≤20 (equally spaced)

12.1.14 Start up time

This is the time taken from the moment of applying power to the drive, to the drive being ready to run the motor:

Sizes 0 to 6: 4s

12.1.15 Output frequency / speed range

Open-loop frequency range: 0 to 3,000Hz

Closed-loop speed range: 0 to 40,000rpm

Closed-loop frequency range: 0 to 1,250Hz*

*(For good performance limit to ~ 600Hz in closed loop vector mode and ~ 400Hz in RFC mode)

12.1.16 Accuracy and resolution

Speed:

The absolute frequency and speed accuracy depends on the accuracy of the crystal used with the drive microprocessor. The accuracy of the crystal is 100ppm, and so the absolute frequency/speed accuracy is 100ppm (0.01%) of the reference, when a preset speed is used. If an analog input is used the absolute accuracy is further limited by the absolute accuracy of the analog input.

The following data applies to the drive only; it does not include the performance of the source of the control signals.

Open loop resolution:
Preset frequency reference: 0.1Hz
Precision frequency reference: 0.001Hz

Closed loop resolution
Preset speed reference: 0.1rpm
Precision speed reference: 0.001rpm
Analog input 1: 16bit plus sign
Analog input 2: 10bit plus sign

Current:

The resolution of the current feedback is 10bit plus sign.

Accuracy: typical 2%
worst case 5%

12.1.17 Acoustic noise

The heatsink fan generates the majority of the acoustic noise produced by the drive. The heatsink fan on size 0 to 2 is a dual speed fan and on size 3 to 6 it is a variable speed fan. The drive controls the speed at which the fan runs based on the temperature of the heatsink and the drive's thermal model system. On size 4 to 6 the minimum speed of the heatsink fan is 0 rpm. The size 3 to 6 is also installed with a variable speed fan to ventilate the capacitor bank.

Table 12-10 gives the acoustic noise produced by the drive for the heatsink fan running at the maximum and minimum speeds.

Table 12-10 Acoustic noise data

Size	< Date code M38		≥ Date code M38	
	Max speed dBA	Min speed dBA	Max speed dBA	Min speed dBA
0			65	53
1	48	41	48	28
2	54	45	54	35
3	56	43	56	43
4			53	
5			72	
6			72	

12.1.18 Overall dimensions

H Height including surface mounting brackets
W Width
D Projection forward of panel when surface mounted
F Projection forward of panel when through-panel mounted
R Projection rear of panel when through-panel mounted

Table 12-11 Overall drive dimensions

Size	Dimension				
	H	W	D	F	R
0	322mm (12.677in)	62mm (2.441in)	226mm (8.898in)		
1	386mm (15.197in)	100mm (3.937in)	219mm (8.622in)	139mm (5.472in)	≤80mm (3.150in)
2	389mm (15.315in)	155mm (6.102in)			
3		250mm (9.843in)	260mm (10.236in)	140mm (5.512in)	≤120mm (4.724in)
4	547mm (21.528in)	310mm (12.205in)	298mm (11.732in)	200mm (7.874in)	≤98mm (3.858in)
5	858mm (33.752in)				
6	1169mm (46.016in)				

12.1.19 Weights

Table 12-12 Overall drive weights

Size	Model	kg	lb
0	All	2.1	4.6
1	1201 to 1204, 1401 to 1404	5	11.0
	1405 and 1406	5.8	12.8
2	All	7	15.4
3	All	15	33.1
4	All	30	66.1
5	All	55	121.3
6	All	75	165.3

12.1.20 Input current, fuse and cable size ratings

The input current is affected by the supply voltage and impedance.

Typical input current

The values of typical input current are given to aid calculations for power flow and power loss.

The values of typical input current are stated for a balanced supply.

Maximum continuous input current

The values of maximum continuous input current are given to aid the selection of cables and fuses. These values are stated for the worst case condition with the unusual combination of stiff supply with bad balance. The value stated for the maximum continuous input current would only be seen in one of the input phases. The current in the other two phases would be significantly lower.

The values of maximum input current are stated for a supply with a 2% negative phase-sequence imbalance and rated at the maximum supply fault current given in Table 12-13.

Table 12-13 Supply fault current used to calculate maximum input currents

Model	Symmetrical fault level (kA)
All	100

Fuses

The AC supply to the drive must be installed with suitable protection against overload and short-circuits. Table 12-14 and Table 12-15 show recommended fuse ratings. Failure to observe this requirement will cause risk of fire.

WARNING

Table 12-14 Size 0 to 3 input current, fuse and cable size ratings

Model	Typical input current	Maximum continuous input current	European cable size EN60204			USA cable size UL508C		
			Fuse rating IEC gG	Input	Output	Fuse rating Class CC or J** for <30A Class J only for >30A	Input	Output
	A	A	A	mm^2	mm^2	A	AWG	AWG
SP0201	3.2 (5.0)*	3.6 (5.0)*	6	0.75	0.75	10	16	24
SP0202	4.8 (7.6)*	5.6 (7.6)*	10	1	0.75	10	16	22
SP0203	6.0 (9.6)*	6.9 (9.6)*	12	1.5	0.75	16	14	20
SP0204	7.9 (13.5)*	8.9 (13.5)*	16	2.5	0.75	20	12	18
SP0205	10.6 (17.4)*	12.3 (17.4)*	20	4	0.75	20	12	18
SP1201	7.1	9.5	10	1.5	1.0	10	14	18
SP1202	9.2	11.3	12	1.5	1.0	15	14	16
SP1203	12.5	16.4	20	4.0	1.0	20	12	14
SP1204	15.4	19.1	20	4.0	1.5	20	12	14
SP2201	13.4	18.1	20	4.0	2.5	20	12	14
SP2202	18.2	22.6	25	4.0	4.0	25	10	10
SP2203	24.2	28.3	32	6.0	6.0	30	8	8
SP3201	35.4	43.1	50	16	16	45	6	6
SP3202	46.8	54.3	63	25	25	60	4	4
SP0401	2.0	2.3	4	0.75	0.75	10	16	24
SP0402	2.6	2.8	4	0.75	0.75	10	16	24
SP0403	3.2	3.3	6	0.75	0.75	10	16	24
SP0404	4.3	4.4	6	0.75	0.75	10	16	22
SP0405	5.6	5.7	8	0.75	0.75	10	16	20
SP1401	4.1	4.8	8	1.0	1.0	8	16	22
SP1402	5.1	5.8	8	1.0	1.0	8	16	20
SP1403	6.8	7.4	8	1.0	1.0	10	16	18
SP1404	9.3	10.6	12	1.5	1.0	15	14	16
SP1405	10	11	12	1.5	1.0	15	14	14
SP1406	12.6	13.4	16	2.5	1.5	15	14	14
SP2401	15.7	17	20	4.0	2.5	20	12	14
SP2402	20.2	21.4	25	4.0	4.0	25	10	10
SP2403	26.6	27.6	32	6.0	6.0	30	8	8
SP2404	26.6	27.6	32	6.0	6.0	30	8	8
SP3401	34.2	36.2	40	10	10	40	6	6
SP3402	40.2	42.7	50	16	16	45	6	6
SP3403	51.3	53.5	63	25	25	60	4	4
SP3501	5.0	6.7	8	1.0	1.0	10	16	18
SP3502	6.0	8.2	10	1.0	1.0	10	16	16
SP3503	7.8	11.1	12	1.5	1.0	15	14	14
SP3504	9.9	14.4	16	2.5	1.5	15	14	14
SP3505	13.8	18.1	20	4.0	2.5	20	12	14
SP3506	18.2	22.2	25	4.0	4.0	25	10	10
SP3507	22.2	26.0	32	6.0	6.0	30	8.0	8.0

*The value in the bracket is when the drive is used on a 1 phase supply.
**Fast acting or high speed class J fuses only.

NOTE

PVC insulated cable should be used.

NOTE

Cable sizes are from IEC60364-5-52:2001 table A.52.C with correction factor for 40°C ambient of 0.87 (from table A52.14) for cable installation method B2 (multicore cable in conduit).

Cable size may be reduced if a different installation method is used, or if the ambient temperature is lower.

The recommended cable sizes above are only a guide. The mounting and grouping of cables affects their current-carrying capacity, in some cases smaller cables may be acceptable but in other cases a larger cable is required to avoid excessive temperature or voltage drop. Refer to local wiring regulations for the correct size of cables.

Table 12-15 Size 4 and larger input current, fuse and cable size ratings

Model	Typical input current	Maximum input current	Fuse option 1		Fuse option 2 semiconductor fuse in series with HRC fuse or breaker		Cable size			
			IEC class gR	North America: Ferraz HSJ	HRC IEC class gG UL class J	Semi-conductor IEC class aR	EN60204		UL508C	
	A	A	A	A	A	A	Input mm^2	Output mm^2	Input AWG	Output AWG
SP4201	62.1	68.9	100	90	90	160	25	25	3	3
SP4202	72.1	78.1	100	100	100	160	35	35	3	3
SP4203	94.5	99.9	125	125	125	200	70	70	1	1
SP5201	116	142	200	175	160	200	95	95	2/0	2/0
SP5202	137	165	250	225	200	250	120	120	4/0	4/0
SP4401	61.2	62.3	80	80	80	160	25	25	3	3
SP4402	76.3	79.6	100	110	100	200	35	35	2	2
SP4403	94.1	97.2	125	125	125	200	70	70	1	1
SP5401	126	131	200	175	160	200	95	95	2/0	2/0
SP5402	152	156	250	225	200	250	120	120	4/0	4/0
SP6401	224	241	315	300	250	315	2 x 70	2 x 70	2 x 2/0	2 x 2/0
SP6402	247	266	315	300	300	350	2 x 120	2 x 120	2 x 4/0	2 x 4/0
SP4601	23	26.5	63	60	32	125	4	4	10	10
SP4602	26.1	28.8	63	60	40	125	6	6	8	8
SP4603	32.9	35.1	63	60	50	125	10	10	8	8
SP4604	39	41	63	60	50	125	16	16	6	6
SP4605	46.2	47.9	63	60	63	125	16	16	6	6
SP4606	55.2	56.9	80	60	63	125	25	25	4	4
SP5601	75.5	82.6	125	100	90	160	35	35	2	2
SP5602	89.1	94.8	125	100	125	160	50	50	1	1
SP6601	128	138	200	200	200	200	2 x 50	2 x 50	2 x 1	2 x 1
SP6602	144	156	200	200	200	200	2 x 50	2 x 50	2 x 1	2 x 1

NOTE

PVC insulated cable should be used.

NOTE

Cable sizes are from IEC60364-5-52:2001 table A.52.C with correction factor for 40°C ambient of 0.87 (from table A52.14) for cable installation method B2 (multicore cable in conduit).

Cable size may be reduced if a different installation method is used, or if the ambient temperature is lower.

The recommended cable sizes above are only a guide. The mounting and grouping of cables affects their current-carrying capacity, in some cases smaller cables may be acceptable but in other cases a larger cable is required to avoid excessive temperature or voltage drop. Refer to local wiring regulations for the correct size of cables.

Inrush current

The drive will have an inrush current during power-up, the peak inrush is limited to the value shown below:

SP020X	18 A peak
SP040X	35 A peak
SP120X	18 A peak
SP140X	35 A peak
SP220X	12 A peak
SP240X	24 A peak
SP320X	8 A peak
SP340X	14 A peak
SP350X	18 A peak

For sizes 4 to 6, the inrush current is limited by a controlled rectifier to below the rated current of the drive.

NOTE

The inrush current for all drives after a brown-out can be larger than the power-up inrush.

12.1.21 Maximum motor cable lengths

Table 12-16 Maximum motor cable lengths (200V drives)

200V Nominal AC supply voltage						
Model	**Maximum permissible motor cable length for each of the following frequencies**					
	3kHz	**4kHz**	**6kHz**	**8kHz**	**12kHz**	**16kHz**
SP0201	50m (165ft)					
SP0202						
SP0203						
SP0204						
SP0205						
SP1201	65m (210ft)					
SP1202	100m (330ft)					
SP1203	130m (425ft)					
SP1204	200m (660ft)	150m (490ft)	100m (330ft)	75m (245ft)	50m (165ft)	37m (120ft)
SP2201						
SP2202						
SP2203						
SP3201						
SP3202						
SP4201	250m (820ft)	185m (607ft)	125m (410ft)	90m (295ft)		
SP4202						
SP4203						
SP5201	250m (820ft)	185m (607ft)	125m (410ft)	90m (295ft)		
SP5202						

Table 12-17 Maximum motor cable lengths (400V drives)

400V Nominal AC supply voltage						
Model	**Maximum permissible motor cable length for each of the following frequencies**					
	3kHz	**4kHz**	**6kHz**	**8kHz**	**12kHz**	**16kHz**
SP0401	50m (165ft)					
SP0402						
SP0403						
SP0404						
SP0405						
SP1401	65m (210ft)					
SP1402	100m (330ft)					
SP1403	130m (425ft)					
SP1404	200m (660ft)	150m (490ft)	100m (330ft)	75m (245ft)	50m (165ft)	37m (120ft)
SP1405						
SP1406						
SP2401						
SP2402						
SP2403						
SP2404						
SP3401						
SP3402						
SP3403						
SP4401	250m (820ft)	185m (607ft)	125m (410ft)	90m (295ft)		
SP4402						
SP4403						
SP5401						
SP5402						
SP6401						
SP6402						

Table 12-18 Maximum motor cable lengths (575V drives)

575V Nominal AC supply voltage						
Model	**Maximum permissible motor cable length for each of the following frequencies**					
	3kHz	**4kHz**	**6kHz**	**8kHz**	**12kHz**	**16kHz**
SP3501	200m (660ft)	150m (490ft)	100m (330ft)	75m (245ft)		
SP3502						
SP3503						
SP3504						
SP3505						
SP3506						
SP3507						

Table 12-19 Maximum motor cable lengths (690V drives)

690V Nominal AC supply voltage						
Model	**Maximum permissible motor cable length for each of the following frequencies**					
	3kHz	**4kHz**	**6kHz**	**8kHz**	**12kHz**	**16kHz**
SP4601	250m (820ft)	185m (607ft)	125m (410ft)	90m (295ft)		
SP4602						
SP4603						
SP4604						
SP4605						
SP4606						
SP5601						
SP5602						
SP6601						
SP6602						

- Cable lengths in excess of the specified values may be used only when special techniques are adopted; refer to the supplier of the drive.
- The default switching frequency is 3kHz for Open-loop and Closed-loop vector, and 6kHz for Servo.

The maximum cable length is reduced from that shown in Table 12-16 and Table 12-17 if high capacitance motor cables are used. For further information, refer to section 4.8.2 *High-capacitance cables* on page 77.

12.1.22 Braking resistor values

Table 12-20 Minimum resistance values and peak power rating for the braking resistor at 40°C (104°F)

Model	Minimum resistance* Ω	Instantaneous power rating kW
SP0201 to SP0205	35	4.35
SP1201 to SP1203	43	3.5
SP1204	29	5.3
SP2201 to SP2203	18	8.9
SP3201 to SP3202	5	30.3
SP4201 to SP4203	5	30.3
SP5201 to SP5202	3.5	53
SP0401 to SP0405	105	5.79
SP1401 to SP1404	74	8.3
SP1405 to SP1406	58	10.6
SP2401 to SP2404	19	33.1
SP3401 to SP3403	18	35.5
SP4401 to SP4402	11	55.3
SP4403	9	67.6
SP5401 to SP5402	7	86.9
SP6401 to SP6402	5	122
SP3501 to SP3507	18	50.7
SP4601 to SP4606	13	95
SP5601 to SP5602	10	125
SP6601 to SP6602	10	125

* Resistor tolerance: ±10%

12.1.23 Torque settings

Table 12-21 Drive control and relay terminal data

Model	Connection type	Torque setting
All	Plug-in terminal block	0.5 N m (0.4 lb ft)

Table 12-22 Drive power terminal data

<table>
<tr><th>Model size</th><th>AC terminals</th><th>High current DC and braking</th><th>Low voltage DC</th><th>Ground terminal</th></tr>
<tr><td>0</td><td colspan="3">Terminal block
1.0 N m (0.73 lb ft)</td><td>Screw (M6)
4.0 N m
(2.9 lb ft)</td></tr>
<tr><td>1</td><td rowspan="2">Plug-in terminal block
1.5 N m
(1.1 lb ft)</td><td colspan="2">Terminal block (M4 screws)
1.5 N m (1.1 lb ft)</td><td rowspan="2">Stud (M5)
4.0 N m
2.9 lb ft</td></tr>
<tr><td>2</td><td>Terminal block
(M5 screws)
1.5 N m
(1.1 lb ft)</td><td rowspan="2">Terminal block
(M4 screws)
1.5 N m
(1.1 lb ft)</td></tr>
<tr><td>3</td><td colspan="2">Terminal block (M6 screws)
2.5 N m 1.8 lb ft</td><td>6.0 N m
4.4 lb ft</td></tr>
<tr><td>4</td><td rowspan="3" colspan="2">M10 stud
15 N m
(11.1 lb ft)</td><td rowspan="3"></td><td rowspan="3">M10 stud
15 N m
(11.1 lb ft)</td></tr>
<tr><td>5</td></tr>
<tr><td>6</td></tr>
<tr><td colspan="4">Torque tolerance</td><td>±10%</td></tr>
</table>

Table 12-23 Plug-in terminal block maximum cable sizes

Model size	Terminal block description	Max cable size
All	11 way control connectors	1.5 mm^2 (16 AWG)
All	2 way relay connector	2.5 mm^2 (12 AWG)
1 and 2	6 way AC power connector	8 mm^2 (8 AWG)
4, 5 and 6	Low Voltage DC Enable connector	1.5 mm^2 (16 AWG)
6	Heatsink fan supply connector	1.5 mm^2 (16 AWG)

12.1.24 Electromagnetic compatibility (EMC)

This is a summary of the EMC performance of the drive. For full details, refer to the *EMC Data Sheet* which can be obtained from the supplier of the drive.

Table 12-24 Immunity compliance

<table>
<tr><th>Standard</th><th>Type of immunity</th><th>Test specification</th><th>Application</th><th>Level</th></tr>
<tr><td>IEC61000-4-2
EN61000-4-2</td><td>Electrostatic discharge</td><td>6kV contact discharge
8kV air discharge</td><td>Module enclosure</td><td>Level 3 (industrial)</td></tr>
<tr><td>IEC61000-4-3
EN61000-4-3</td><td>Radio frequency radiated field</td><td>10V/m prior to modulation
80 - 1000MHz
80% AM (1kHz) modulation</td><td>Module enclosure</td><td>Level 3 (industrial)</td></tr>
<tr><td rowspan="2">IEC61000-4-4
EN61000-4-4</td><td rowspan="2">Fast transient burst</td><td>5/50ns 2kV transient at 5kHz repetition frequency via coupling clamp</td><td>Control lines</td><td>Level 4 (industrial harsh)</td></tr>
<tr><td>5/50ns 2kV transient at 5kHz repetition frequency by direct injection</td><td>Power lines</td><td>Level 3 (industrial)</td></tr>
<tr><td rowspan="3">IEC61000-4-5
EN61000-4-5</td><td rowspan="3">Surges</td><td>Common mode 4kV
1.2/50µs waveshape</td><td>AC supply lines:
line to ground</td><td>Level 4</td></tr>
<tr><td>Differential mode 2kV
1.2/50µs waveshape</td><td>AC supply lines:
line to line</td><td>Level 3</td></tr>
<tr><td>Lines to ground</td><td>Signal ports to ground [1]</td><td>Level 2</td></tr>
<tr><td>IEC61000-4-6
EN61000-4-6</td><td>Conducted radio frequency</td><td>10V prior to modulation
0.15 - 80MHz
80% AM (1kHz) modulation</td><td>Control and power lines</td><td>Level 3 (industrial)</td></tr>
<tr><td>IEC61000-4-11
EN61000-4-11</td><td>Voltage dips and interruptions</td><td>-30% 10ms
+60% 100ms
-60% 1s
<-95% 5s</td><td>AC power ports</td><td></td></tr>
<tr><td>IEC61000-6-1
EN61000-6-1:2007</td><td colspan="2">Generic immunity standard for the residential, commercial and light - industrial environment</td><td></td><td>Complies</td></tr>
<tr><td>IEC61000-6-2
EN61000-6-2:2005</td><td colspan="2">Generic immunity standard for the industrial environment</td><td></td><td>Complies</td></tr>
<tr><td>IEC61800-3
EN61800-3:2004</td><td colspan="2">Product standard for adjustable speed power drive systems (immunity requirements)</td><td colspan="2">Meets immunity requirements for first and second environments</td></tr>
</table>

[1] See section *Surge immunity of control circuits - long cables and connections outside a building* on page 89 for control ports for possible requirements regarding grounding and external surge protection

Emission

The drive contains an in-built filter for basic emission control. An additional optional external filter provides further reduction of emission. The requirements of the following standards are met, depending on the motor cable length and switching frequency.

Table 12-25 Size 0 (200V) emission compliance (single and three phase drives)

Motor cable length (m)	Switching frequency (kHz)					
	3	4	6	8	12	16
Using internal filter:						
0 to 7	E2U					TBC
7 to 9	E2U				E2R	TBC
9 to 11	E2U		E2R			TBC
>11	E2R					TBC
Using external filter:						
0 to 20	R			I		
20 to 100	I					

Table 12-26 Size 0 (400V) emission compliance

Motor cable length (m)	Switching frequency (kHz)					
	3	4	6	8	12	16
Using internal filter:						
0 to 6	E2U			E2R		TBC
6 to 12	E2U		E2R			TBC
12 to 14	E2U	E2R				TBC
>14	E2R					TBC
Using external filter:						
0 to 20	R			I		
20 to 70	I					
70 to 100	I	Do not use				

Table 12-27 Size 1 emission compliance

Motor cable length (m)	Switching frequency (kHz)					
	3	4	6	8	12	16
Using internal filter:						
0 to 4	E2U	E2R				
>4	E2R					
Using internal filter and external ferrite ring:						
0 to 10	E2U			E2R		
> 10	E2R					
Using external filter:						
0 to 25	R			I		
25 to 75	I				Do not use	
75 to 100	I	Do not use				

Table 12-28 Size 2 emission compliance

Motor cable length (m)	Switching frequency (kHz)					
	3	4	6	8	12	16
Using internal filter:						
Any	E2R					
Using internal filter and external ferrite ring:						
0 to 4	E2U			E2R		
4 to 10	E2U	E2R				
> 10	E2R					
Using external filter:						
0 to 25	R			I		
25 to 75	I				Do not use	
75 to 100	I	Do not use				

Table 12-29 Size 3 emission compliance

Motor cable length (m)	Switching frequency (kHz)				
	3	4	6	8	12
Using internal filter:					
Any	E2R				
Using external filter:					
0 to 20	R	I			
20 to 50	I				
50 to 75	I				Do not use
75 to 100	I	Do not use			

Table 12-30 Size 4 (200V & 400V) emission compliance

Motor cable length (m)	Switching frequency (kHz)			
	3	4	6	8
Using internal filter:				
Any	E2R			
Using external filter:				
0 to 25	I			
25 to 50	I			
50 to 75	I	E2U		
75 to 100	I	E2U		

Table 12-31 Size 4 (690V) emission compliance

Motor cable length (m)	Switching frequency (kHz)			
	3	4	6	8
Using internal filter:				
Any	E2R			
Using external filter:				
0 to 25	I			
25 to 50	I		E2U	
50 to 75	I		E2U	
75 to 100	I		E2U	

Table 12-32 Size 5 (400V) emission compliance

Motor cable length (m)	Switching frequency (kHz)			
	3	4	6	8
Using internal filter:				
100	E2U			
Using external filter:				
0 to 100	I			

Table 12-33 Size 5 (690V) emission compliance

Motor cable length (m)	Switching frequency (kHz)			
	3	4	6	8
Using internal filter:				
100	E2R			
Using external filter:				
0 to 25	I			
0 to 100	I		Do not use	

Table 12-34 Size 6 (400V only) emission compliance

Motor cable length (m)	Switching frequency (kHz)		
	3	4	6
Using internal filter:			
0 to 100	E2U		
100 to max*	E2R		
Using external filter:			
0 to 100	I		

*Refer to section 12.1.21 *Maximum motor cable lengths* on page 276.

Table 12-35 Size 6 (690V only) emission compliance

Motor cable length (m)	Switching frequency (kHz)		
	3	4	6
Using internal filter:			
0 to 100	E2U		
100 to max*	E2R		
Using external filter:			
0 to 25	I		
0 to 100	I	Do not use	

*Refer to section 12.1.21 *Maximum motor cable lengths* on page 276.

Key (shown in decreasing order of permitted emission level):

E2R EN 61800-3:2004 second environment, restricted distribution (Additional measures may be required to prevent interference)

E2U EN 61800-3:2004 second environment, unrestricted distribution

I Industrial generic standard EN 50081-2 (EN 61000-6-4)
EN 61800-3:2004 first environment restricted distribution (The following caution is required by EN 61800-3:2004)



This is a product of the restricted distribution class according to IEC 61800-3. In a residential environment this product may cause radio interference in which case the user may be required to take adequate measures.

R Residential generic standard EN 61000-6-3:2007
EN 61800-3:2004 first environment unrestricted distribution

EN 61800-3:2004 defines the following:

- The first environment is one that includes residential premises. It also includes establishments directly connected without intermediate transformers to a low-voltage power supply network which supplies buildings used for residential purposes.
- The second environment is one that includes all establishments other than those directly connected to a low-voltage power supply network which supplies buildings used for residential purposes.
- Restricted distribution is defined as a mode of sales distribution in which the manufacturer restricts the supply of equipment to suppliers, customers or users who separately or jointly have technical competence in the EMC requirements of the application of drives.

IEC 61800-3:2004 and EN 61800-3:2004

The 2004 revision of the standard uses different terminology to align the requirements of the standard better with the EC EMC Directive.

Power drive systems are categorized C1 to C4:

Category	Definition	Corresponding code used above
C1	Intended for use in the first or second environments	R
C2	Not a plug-in or movable device, and intended for use in the first environment only when installed by a professional, or in the second environment	I
C3	Intended for use in the second environment, not the first environment	E2U
C4	Rated at over 1000V or over 400A, intended for use in complex systems in the second environment	E2R

Note that category 4 is more restrictive than E2R, since the rated current of the PDS must exceed 400A or the supply voltage exceed 1000V, for the complete PDS.

12.2 Optional external EMC filters

Table 12-36 EMC filter cross reference

Drive	Schaffner	Epcos
	CT part no.	CT part no.
SP0201 to SP0205 (1 phase)	4200-6000	
SP0201 to SP0205 (3 phase)	4200-6001	
SP1201 to SP1202	4200-6118	4200-6121
SP1203 to SP1204	4200-6119	4200-6120
SP2201 to SP2203	4200-6210	4200-6211
SP3201 to SP3202	4200-6307	4200-6306
SP4201 to SP4203	4200-6406	4200-6405
SP5201 to SP5202	4200-6503	4200-6501
SP0401 to SP0405	4200-6002	
SP1401 to SP1404	4200-6118	4200-6121
SP1405 to SP1406	4200-6119	4200-6120
SP2401 to SP2404	4200-6210	4200-6211
SP3401 to SP3403	4200-6305	4200-6306
SP4401 to SP4403	4200-6406	4200-6405
SP5401 to SP5402	4200-6503	4200-6501
SP6401 to SP6402	4200-6603	4200-6601
SP3501 to SP3507	4200-6309	4200-6308
SP4601 to SP4606	4200-6408	4200-6407
SP5601 to SP5602	4200-6504	4200-6502
SP6601 to SP6602	4200-6604	4200-6602

12.2.1 EMC filter ratings

Table 12-37 Optional external EMC filter details

CT part number	Manufacturer	Maximum continuous current		Voltage rating	IP rating	Power dissipation at rated current	Ground leakage		Discharge resistors
		@ 40°C (104°F) A	@ 50°C (122°F) A	V		W	Balanced supply phase-to-phase and phase-to-ground mA	Worst case mA	
4200-6000	Schaffner	19	17.3	240	20	11	29.5	56.9	See Note 6
4200-6001		17	15.5			13	8	50	See Note 1
4200-6002		11	10	480		10	16	90	
4200-6118		10	10	480		6.9	29.4	153	
4200-6119		16	16			9.2	38.8	277	
4200-6210		32	28.2			11	38.0	206	
4200-6305		62	56.6			23	66.0	357	
4200-6307		75	68.5	240		29	24.0	170	
4200-6309		30	30	575		15	102.0	557	See Note 3
4200-6406		101	92.2	480		25	73.0	406	See Note 1
4200-6408		58	52.8	690		31	66.0	344	
4200-6503		164	150	480		30	39.1	216	See Note 4
4200-6504		95	86.7	690		30	66.0	344	See Note 1
4200-6603		260	237	480	00	14.2	41.0	219	
4200-6604		160	146	690		5.4	88.5	296	
4200-6121	Epcos	10	9.1	480	20	4.2	<30.0	186.5	See Note 2
4200-6120		16	14.6			10.8			
4200-6211		32	29.1			17.8			
4200-6306		75	68.3			19.4		238	
4200-6308		30	22.5	660		17.6	<35.0	230	
4200-6405		101	75	480		30	<30.0	180	
4200-6407		58	44	690		15	<40.0	<340	See Note 5
4200-6501		165	125	480		27	<20.0	<120	See Note 2
4200-6502		95	71	690		19	<55.0	<450	See Note 5
4200-6601		260	195	480	00	13	<45.0	<375	
4200-6602		160	120	690		5	<60.0	<520	

NOTE

1. 1MΩ in a ⅄ connection between phases, with the ⅄ point connected by a 680kΩ resistor to ground (i.e. line to line 2MΩ, line to ground 1.68MΩ)
2. 1MΩ in a ⅄ connection between phases, with the ⅄ point connected by a 1.5MΩ resistor to ground (i.e. line to line 2MΩ, line to ground 2.5MΩ)
3. 2MΩ between phases with each phase connected by a 660kΩ resistance to ground.
4. 1.5MΩ in a ⅄ connection between phases, with the ⅄ point connected by a 680kΩ resistor to ground (i.e. line to line 3MΩ, line to ground 2.18MΩ)
5. 1.8MΩ in a ⅄ connection between phases, with the ⅄ point connected by a 1.5MΩ resistor to ground (i.e. line to line 3.6MΩ, line to ground 3.3MΩ)
6. 470kΩ between phases with each phase connected by a 2MΩ resistance to ground.

12.2.2 Overall EMC filter dimensions

Table 12-38 Optional external EMC filter dimensions

CT part number	Manufacturer	Dimension			Weight	
		H	W	D	kg	lb
4200-6000	Schaffner	359 mm (14.13 in)	61 mm (2.40 in)	29 mm (1.14 in)	1.2	2.64
4200-6001						
4200-6002						
4200-6118		440 mm (17.323 in)	100 mm (3.937 in)	45 mm (1.772in)	1.4	3.1
4200-6119						
4200-6210		428.5 mm (16.870 in)	155 mm (6.102 in)	55 mm (2.165 in)	2	4.4
4200-6305		414 mm (16.299 in)	250 mm (9.842 in)	60 mm (2.362 in)	3.5	7.7
4200-6307						
4200-6309						
4200-6406		300 mm (11.811 in)	225 mm (8.858 in)	100 mm (3.937 in)	4	8.8
4200-6408			208 mm (8.189 in)		3.8	8.4
4200-6503			249 mm (9.803 in)	120 mm (4.724 in)	6.8	15
4200-6504			225 mm (8.858 in)	100 mm (3.937 in)	4.4	9.7
4200-6603		295 mm (11.614 in)	230 mm (9.055 in)	136 mm (5.354 in)	5.25	11.6
4200-6604		357 mm (14.055 in)				
4200-6121	Epcos	450 mm (17.717 in)	100 mm (3.937 in)	45 mm (1.772 in)	2.1	4.6
4200-6120						
4200-6211		431.5 mm (16.988 in)	155 mm (6.102 in)	55 mm (2.165 in)	3.3	7.3
4200-6306		425 mm (16.732 in)	250 mm (9.843 in)	60 mm (2.362 in)	5.1	11.2
4200-6308						
4200-6405		300 mm (11.811 in)	207 mm (8.150 in)	90 mm (3.543 in)	7.8	17.2
4200-6407			205 mm (8.071 in)		8.0	17.6
4200-6501			249 mm (9.803 in)	120 mm (4.724 in)	12.0	26.5
4200-6502					10.0	22.0
4200-6601		364 mm (14.331 in)	230 mm (9.055 in)	147 mm (5.787 in)	8.6	19.0
4200-6602						

12.2.3 EMC filter torque settings

Optional external EMC Filter terminal data

CT part number	Manufacturer	Power connections		Ground connections	
		Max cable size	Max torque	Ground stud size	Max torque
4200-6000	Schaffner	4mm^2 12AWG	0.8 N m (0.6 lb ft)		
4200-6001					
4200-6002					
4200-6118				M5	3.5 N m (2.6 lb ft)
4200-6119					
4200-6210		10mm^2 8AWG	2.0 N m (1.5 lb ft)		
4200-6305		16mm^2 6AWG	2.2 N m (1.6 lb ft)	M6	3.9 N m (2.9 lb ft)
4200-6307					
4200-6309					
4200-6406		50mm^2 0AWG	8 N m (5.9 lb ft)	M10	25 N m (18.4 lb ft)
4200-6408		25mm^2 4AWG	2.3 N m (1.7 lb ft)	M6	3.9 N m (2.9 lb ft)
4200-6503		95mm^2 4/0AWG	20 N m (14.7 lb ft)	M10	25 N m (18.4 lb ft)
4200-6504		50mm^2 0AWG	8 N m (5.9 lb ft)		
4200-6603					
4200-6604					
4200-6120	Epcos	4mm^2 12AWG	0.6 N m (0.4 lb ft)	M5	3.0 N m (2.2 lb ft)
4200-6121					
4200-6211		10mm^2 8AWG	1.35 N m (1.0 lb ft)		
4200-6306		16mm^2 6AWG	2.2 N m (1.6 lb ft)	M6	5.1 N m (3.8 lb ft)
4200-6308		10mm^2 8AWG	1.35 N m (1.0 lb ft)		
4200-6405		50mm^2 0AWG	6.8 N m (5.0 lb ft)	M10	10 N m (7.4 lb ft)
4200-6407					
4200-6501		95mm^2 4/0AWG	20 N m (14.7 lb ft)		
4200-6502					
4200-6601					
4200-6602					

13 Diagnostics

The display on the drive gives various information about the status of the drive. These fall into three categories:

- Trip indications
- Alarm indications
- Status indications

WARNING

Users must not attempt to repair a drive if it is faulty, nor carry out fault diagnosis other than through the use of the diagnostic features described in this chapter.
If a drive is faulty, it must be returned to an authorized Control Techniques distributor for repair.

13.1 Trip indications

If the drive trips, the output of the drive is disabled so that the drive stops controlling the motor. The upper display indicates that a trip has occurred and the lower display shows the trip. If this is a multi-module drive and a power module has indicated a trip, then the lower display will alternate between the trip string and the module number.

Trips are listed alphabetically in Table 13-1 based on the trip indication shown on the drive display. Refer to Figure 13-1.

If a display is not used, the drive LED Status indicator will flash if the drive has tripped. Refer to Figure 13-2.

The trip indication can be read in Pr **10.20** providing a trip number. Trip numbers are listed in numerical order in Table 13-2 so the trip indication can be cross referenced and then diagnosed using Table 13-1.

Example

1. Trip code 3 is read from Pr **10.20** via serial communications.
2. Checking Table 13-2 shows Trip 3 is an OI.AC trip.

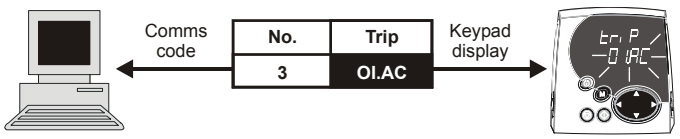

3. Look up OI.AC in Table 13-1.
4. Perform checks detailed under *Diagnosis*.

Figure 13-1 Keypad status modes

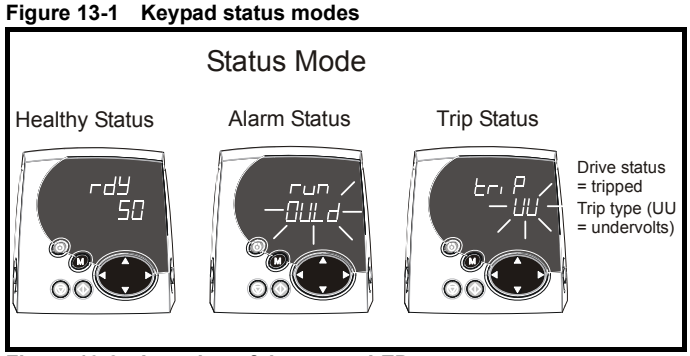

Figure 13-2 Location of the status LED

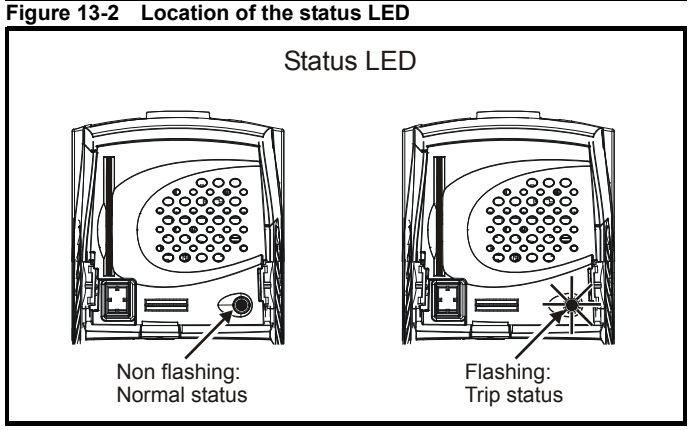

Trip	Diagnosis
OI.AC	**Instantaneous output over current detected: peak output current greater than 222%**
3	Acceleration / deceleration rate is too short. If seen during autotune reduce voltage boost Pr **5.15** Check for short circuit on output cabling Check integrity of motor insulation Check feedback device wiring Check feedback device mechanical coupling Check feedback signals are free from noise Is motor cable length within limits for that frame size? Reduce the values in speed loop gain parameters – Pr **3.10**, Pr **3.11** and Pr **3.12** (closed loop vector and servo modes only) Has offset measurement test been completed? (servo mode only) Reduce the values in current loop gain parameters - Pr **4.13** and Pr **4.14** (closed loop vector and servo modes only)

Table 13-1 Trip indications

Trip	Diagnosis
br.th	**Internal braking resistor thermistor temperature monitoring fail (size 0 only)**
10	If no internal brake resistor is installed, set Pr **0.51** (or Pr **10.37**) to 8 to disable this trip. If an internal brake resistor is installed: • Ensure that the internal braking resistor thermistor is connected correctly • Ensure that the fan in the drive is working correctly • Replace the internal braking resistor
C.Acc	**SMARTCARD trip: SMARTCARD Read / Write fail**
185	Check SMARTCARD is installed / located correctly Ensure SMARTCARD is not writing data to data location 500 to 999 Replace SMARTCARD
C.boot	**SMARTCARD trip: The menu 0 parameter modification cannot be saved to the SMARTCARD because the necessary file has not been created on the SMARTCARD**
177	A write to a menu 0 parameter has been initiated via the keypad with Pr **11.42** set to auto(3) or boot(4), but the necessary file on the SMARTCARD has not bee created Ensure that Pr **11.42** is correctly set and reset the drive to create the necessary file on the SMARTCARD Re-attempt the parameter write to the menu 0 parameter
C.bUSY	**SMARTCARD trip: SMARTCARD can not perform the required function as it is being accessed by a Solutions Module**
178	Wait for the Solutions Module to finish accessing the SMARTCARD and then re-attempt the required function
C.Chg	**SMARTCARD trip: Data location already contains data**
179	Erase data in data location Write data to an alternative data location
C.cPr	**SMARTCARD trip: The values stored in the drive and the values in the data block on the SMARTCARD are different**
188	Press the red reset button
C.dAt	**SMARTCARD trip: Data location specified does not contain any data**
183	Ensure data block number is correct
C.Err	**SMARTCARD trip: SMARTCARD data is corrupted**
182	Ensure the card is located correctly Erase data and retry Replace SMARTCARD
C.Full	**SMARTCARD trip: SMARTCARD full**
184	Delete a data block or use different SMARTCARD
cL2	**Analog input 2 current loss (current mode)**
28	Check analog input 2 (terminal 7) current signal is present (4-20mA, 20-4mA)
cL3	**Analog input 3 current loss (current mode)**
29	Check analog input 3 (terminal 8) current signal is present (4-20mA, 20-4mA)
CL.bit	**Trip initiated from the control word (Pr 6.42)**
35	Disable the control word by setting Pr **6.43** to 0 or check setting of Pr **6.42**
ConF.P	**The number of power modules installed no longer matches the value stored in Pr 11.35**
111	Ensure that all power modules are correctly connected Ensure that all power modules have powered up correctly Ensure that the value in Pr **11.35** matches the number of power modules connected
C.OPtn	**SMARTCARD trip: Solutions Modules installed are different between source drive and destination drive**
180	Ensure correct Solutions Modules are installed Ensure Solutions Modules are in the same Solutions Module slot Press the red reset button
C.Prod	**SMARTCARD trip: The data blocks on the SMARTCARD are not compatible with this product**
175	Erase all data on the SMARTCARD by setting Pr **xx.00** to 9999 and pressing the red reset button Replace SMARTCARD
C.rdo	**SMARTCARD trip: SMARTCARD has the Read Only bit set**
181	Enter 9777 in Pr **xx.00** to allow SMARTCARD Read / Write access Ensure the drive is not writing to data locations 500 to 999 on the card

<table>
<tr><th>Trip</th><th>Diagnosis</th></tr>
<tr><td>C.rtg</td><td>SMARTCARD trip: The voltage and/or current rating of the source and destination drives are different</td></tr>
<tr><td>186</td><td>Drive rating dependent parameters (parameters with the RA coding) are likely to have different values and ranges with drives of different voltage and current ratings. Parameters with this attribute will not be transferred to the destination drive by SMARTCARDs when the rating of the destination drive is different from the source drive and the file is a parameter file. However, with software V01.09.00 and later drive rating dependent parameters will be transferred if only the current rating is different and the file is a differences from default type file.
Press the red reset button
Drive rating parameters are:
<table>
<tr><th>Parameter</th><th>Function</th></tr>
<tr><td>2.08</td><td>Standard ramp voltage</td></tr>
<tr><td>4.05/6/7, 21.27/8/9</td><td>Current limits</td></tr>
<tr><td>4.24</td><td>User current maximum scaling</td></tr>
<tr><td>5.07, 21.07</td><td>Motor rated current</td></tr>
<tr><td>5.09, 21.09</td><td>Motor rated voltage</td></tr>
<tr><td>5.10, 21.10</td><td>Rated power factor</td></tr>
<tr><td>5.17, 21.12</td><td>Stator resistance</td></tr>
<tr><td>5.18</td><td>Switching frequency</td></tr>
<tr><td>5.23, 21.13</td><td>Voltage offset</td></tr>
<tr><td>5.24, 21.14</td><td>Transient inductance</td></tr>
<tr><td>5.25, 21.24</td><td>Stator inductance</td></tr>
<tr><td>6.06</td><td>DC injection braking current</td></tr>
<tr><td>6.48</td><td>Line power supply loss ride through detection level</td></tr>
</table>
The above parameters will be set to their default values.</td></tr>
<tr><td>C.TyP</td><td>SMARTCARD trip: SMARTCARD parameter set not compatible with drive</td></tr>
<tr><td>187</td><td>Press the reset button
Ensure destination drive type is the same as the source parameter file drive type</td></tr>
<tr><td>dESt</td><td>Two or more parameters are writing to the same destination parameter</td></tr>
<tr><td>199</td><td>Set Pr xx.00 = 12001 check all visible parameters in the menus for duplication</td></tr>
<tr><td>EEF</td><td>EEPROM data corrupted - Drive mode becomes open loop and serial comms will timeout with remote keypad on the drive RS485 comms port.</td></tr>
<tr><td>31</td><td>This trip can only be cleared by loading default parameters and saving parameters</td></tr>
<tr><td>EnC1</td><td>Drive encoder trip: Encoder power supply overload</td></tr>
<tr><td>189</td><td>Check encoder power supply wiring and encoder current requirement
Maximum current = 200mA @ 15V, or 300mA @ 8V and 5V</td></tr>
<tr><td>EnC2</td><td>Drive encoder trip: Wire break (Drive encoder terminals 1 & 2, 3 & 4, 5 & 6)</td></tr>
<tr><td>190</td><td>Check cable continuity
Check wiring of feedback signals is correct
Check encoder power supply is set correctly in Pr 3.36
Replace feedback device
If wire break detection on the main drive encoder input is not required, set Pr 3.40 = 0 to disable the Enc2 trip</td></tr>
<tr><td>EnC3</td><td>Drive encoder trip: Phase offset incorrect while running</td></tr>
<tr><td>191</td><td>Check the encoder signal for noise
Check encoder shielding
Check the integrity of the encoder mechanical mounting
Repeat the offset measurement test</td></tr>
<tr><td>EnC4</td><td>Drive encoder trip: Feedback device comms failure</td></tr>
<tr><td>192</td><td>Ensure encoder power supply is correct
Ensure baud rate is correct
Check encoder wiring
Replace feedback device</td></tr>
<tr><td>EnC5</td><td>Drive encoder trip: Checksum or CRC error</td></tr>
<tr><td>193</td><td>Check the encoder signal for noise
Check the encoder cable shielding
With EnDat encoders, check the comms resolution and/or carry out the auto-configuration Pr 3.41</td></tr>
<tr><td>EnC6</td><td>Drive encoder trip: Encoder has indicated an error</td></tr>
<tr><td>194</td><td>Replace feedback device
With SSI encoders, check the wiring and encoder supply setting</td></tr>
</table>

Trip	Diagnosis
EnC7	**Drive encoder trip: Initialisation failed**
195	Re-set the drive Check the correct encoder type is entered into Pr **3.38** Check encoder wiring Check encoder power supply is set correctly Carry out the auto-configuration Pr **3.41** Replace feedback device
EnC8	**Drive encoder trip: Auto configuration on power up has been requested and failed**
196	Change the setting of Pr **3.41** to 0 and manually enter the drive encoder turns (Pr **3.33**) and the equivalent number of lines per revolution (Pr **3.34**) Check the comms resolution
EnC9	**Drive encoder trip: Position feedback selected is selected from a Solutions Module slot which does not have a speed / position feedback Solutions Module installed**
197	Check setting of Pr **3.26** (or Pr **21.21** if the second motor parameters have been enabled)
EnC10	**Drive encoder trip: Servo mode phasing failure because encoder phase angle (Pr 3.25 or Pr 21.20) is incorrect**
198	Check the encoder wiring. Perform an autotune to measure the encoder phase angle or manually enter the correct phase angle into Pr **3.25** (or Pr **21.20**). Spurious Enc10 trips can be seen in very dynamic applications. This trip can be disabled by setting the overspeed threshold in Pr **3.08** to a value greater than zero. Caution should be used in setting the over speed threshold level as a value which is too large may mean that an encoder fault will not be detected.
Enc11	**Drive encoder trip: A failure has occurred during the alignment of the analog signals of a SINCOS encoder with the digital count derived from the sine and cosine waveforms and the comms position (if applicable). This fault is usually due to noise on the sine and cosine signals.**
161	Check encoder cable shield. Examine sine and cosine signals for noise.
Enc12	**Drive encoder trip: Hiperface encoder - The encoder type could not be identified during auto-configuration**
162	Check encoder type can be auto-configured. Check encoder wiring. Enter parameters manually.
Enc13	**Drive encoder trip: EnDat encoder - The number of encoder turns read from the encoder during auto-configuration is not a power of 2**
163	Select a different type of encoder.
Enc14	**Drive encoder trip: EnDat encoder - The number of comms bits defining the encoder position within a turn read from the encoder during auto-configuration is too large.**
164	Select a different type of encoder. Faulty encoder.
Enc15	**Drive encoder trip: The number of periods per revolution calculated from encoder data during auto-configuration is either less than 2 or greater than 50,000.**
165	Linear motor pole pitch / encoder ppr set up is incorrect or out of parameter range i.e. Pr **5.36** = 0 or Pr **21.31** = 0. Faulty encoder.
Enc16	**Drive encoder trip: EnDat encoder - The number of comms bits per period for a linear encoder exceeds 255.**
166	Select a different type of encoder. Faulty encoder.
Enc17	**Drive encoder trip: The periods per revolution obtained during auto-configuration for a rotary SINCOS encoder is not a power of two.**
167	Select a different type of encoder. Faulty encoder.
ENP.Er	**Data error from electronic nameplate stored in selected position feedback device**
176	Replace feedback device
Et	**External trip**
6	Check terminal 31 signal Check value of Pr **10.32** Enter 12001 in Pr **xx.00** and check for parameter controlling Pr **10.32** Ensure Pr **10.32** or Pr **10.38** (=6) are not being controlled by serial comms
HF01	**Data processing error: CPU address error**
	Hardware fault - return drive to supplier

Trip	Diagnosis
HF02	**Data processing error: DMAC address error**
	Hardware fault - return drive to supplier
HF03	**Data processing error: Illegal instruction**
	Hardware fault - return drive to supplier
HF04	**Data processing error: Illegal slot instruction**
	Hardware fault - return drive to supplier
HF05	**Data processing error: Undefined exception**
	Hardware fault - return drive to supplier
HF06	**Data processing error: Reserved exception**
	Hardware fault - return drive to supplier
HF07	**Data processing error: Watchdog failure**
	Hardware fault - return drive to supplier
HF08	**Data processing error: Level 4 crash**
	Hardware fault - return drive to supplier
HF09	**Data processing error: Heap overflow**
	Hardware fault - return drive to supplier
HF10	**Data processing error: Router error**
	Hardware fault - return drive to supplier
HF11	**Data processing error: Access to EEPROM failed**
	Hardware fault - return drive to supplier
HF12	**Data processing error: Main program stack overflow**
	Hardware fault - return drive to supplier
HF13	**Data processing error: Software incompatible with hardware**
	Hardware or software fault - return drive to supplier
HF17	**Multi-module system thermistor short circuit or open circuit**
217	Hardware fault - return drive to supplier
HF18	**Multi-module system interconnect cable error**
218	Hardware fault - return drive to supplier
HF19	**Temperature feedback multiplexing failure**
219	Hardware fault - return drive to supplier
HF20	**Power stage recognition: serial code error**
220	Hardware fault - return drive to supplier
HF21	**Power stage recognition: unrecognised frame size**
221	Hardware fault - return drive to supplier
HF22	**Power stage recognition: multi module frame size mismatch**
222	Hardware fault - return drive to supplier
HF23	**Power stage recognition: multi module voltage or current rating mismatch**
223	Hardware fault - return drive to supplier
HF24	**Power stage recognition: unrecognised drive size**
224	Hardware fault - return drive to supplier
HF25	**Current feedback offset error**
225	Hardware fault - return drive to supplier
HF26	**Soft start relay failed to close, soft start monitor failed or braking IGBT short circuit at power up**
226	Hardware fault - return drive to supplier
HF27	**Power stage thermistor 1 fault**
227	Hardware fault - return drive to supplier

Trip	Diagnosis
HF28	**Power stage thermistor 2 fault, or internal fan fault (size 3)**
228	Hardware fault - return drive to supplier
HF29	**Control board thermistor fault**
229	Hardware fault - return drive to supplier
HF30	**DCCT wire break trip from power module**
230	Hardware fault - return drive to supplier
HF31	**Internal capacitor bank fan failure (size 4 and larger) or a module has not powered up in a multi-module parallel drive**
231	Check the AC or DC power supply to all modules in a multi-module parallel drive If the AC or DC power supply is present, or if this is a single drive, then there is a hardware fault - return drive to the supplier
HF32	**Power stage - Identification and trip information serial code error**
232	Hardware fault - return drive to the supplier
It.AC	**Output current overload timed out (I^2t) - accumulator value can be seen in Pr 4.19**
20	Ensure the load is not jammed / sticking Check the load on the motor has not changed If seen during an autotune in servo mode, ensure that the motor rated current Pr **0.46** (Pr **5.07**) or Pr **21.07** is ≤Heavy Duty current rating of the drive Tune the rated speed parameter (closed loop vector only) Check feedback device signal for noise Check the feedback device mechanical coupling Ensure that the motor rated current is not set to zero
It.br	**Braking resistor overload timed out (I^2t) – accumulator value can be seen in Pr 10.39**
19	Ensure the values entered in Pr **10.30** and Pr **10.31** are correct Increase the power rating of the braking resistor and change Pr **10.30** and Pr **10.31** If an external thermal protection device is being used and the braking resistor software overload is not required, set Pr **10.30** or Pr **10.31** to 0 to disable the trip
L.SYnC	**Drive failed to synchronize to the supply voltage in Regen mode**
39	Refer to the *Diagnostics* chapter in the *Unidrive SP Regen Installation Guide*.
O.CtL	**Drive control board over temperature**
23	Check enclosure / drive fans are still functioning correctly Check enclosure ventilation paths Check enclosure door filters Check ambient temperature Reduce drive switching frequency
O.ht1	**Power device over temperature based on thermal model**
21	Reduce drive switching frequency Reduce duty cycle Decrease acceleration / deceleration rates Reduce motor load
O.ht2	**Heatsink over temperature**
22	Check enclosure / drive fans are still functioning correctly Check enclosure ventilation paths Check enclosure door filters Increase ventilation Decrease acceleration / deceleration rates Reduce drive switching frequency Reduce duty cycle Reduce motor load
Oht2.P	**Power module heatsink over temperature**
105	Check enclosure / drive fans are still functioning correctly Check enclosure ventilation paths Check enclosure door filters Increase ventilation Decrease acceleration / deceleration rates Reduce drive switching frequency Reduce duty cycle Reduce motor load

Trip	Diagnosis
O.ht3	**Drive over-temperature based on thermal model**
27	The drive will attempt to stop the motor before tripping. If the motor does not stop in 10s the drive trips immediately. Check DC bus ripple Ensure all three input phases are present and balanced Reduce duty cycle Reduce motor load
Oht4.P	**Power module rectifier over temperature or input snubber resistor over temperature (size 4 and above)**
102	Check for supply imbalance Check for supply disturbance such as notching from a DC drive Check enclosure / drive fans are still functioning correctly Check enclosure ventilation paths Check enclosure door filters Increase ventilation Decrease acceleration / deceleration rates Reduce drive switching frequency Reduce duty cycle Reduce motor load
OI.AC	**Instantaneous output over current detected: peak output current greater than 222%**
3	Acceleration /deceleration rate is too short. If seen during autotune reduce voltage boost Pr **5.15** Check for short circuit on output cabling Check integrity of motor insulation Check feedback device wiring Check feedback device mechanical coupling Check feedback signals are free from noise Is motor cable length within limits for that frame size? Reduce the values in speed loop gain parameters – Pr **3.10**, Pr **3.11** and Pr **3.12** (closed loop vector and servo modes only) Has offset measurement test been completed? (servo mode only) Reduce the values in current loop gain parameters - Pr **4.13** and Pr **4.14** (closed loop vector and servo modes only)
OIAC.P	**Power module over current detected from the module output currents**
104	Acceleration /deceleration rate is too short. If seen during autotune reduce voltage boost Pr **5.15** Check for short circuit on output cabling Check integrity of motor insulation Check feedback device wiring Check feedback device mechanical coupling Check feedback signals are free from noise Is motor cable length within limits for that frame size? Reduce the values in speed loop gain parameters – Pr **3.10**, Pr **3.11** and Pr **3.12** (closed loop vector and servo modes only) Has offset measurement test been completed? (servo mode only) Reduce the values in current loop gain parameters - Pr **4.13** and Pr **4.14** (closed loop vector and servo modes only)
OI.br	**Braking transistor over-current detected: short circuit protection for the braking transistor activated**
4	Check braking resistor wiring Check braking resistor value is greater than or equal to the minimum resistance value Check braking resistor insulation
OIbr.P	**Power module braking IGBT over current**
103	Check braking resistor wiring Check braking resistor value is greater than or equal to the minimum resistance value Check braking resistor insulation
OIdC.P	**Power module over current detected from IGBT on state voltage monitoring**
109	Vce IGBT protection activated. Check motor and cable insulation.
O.Ld1	**Digital output overload: total current drawn from 24V supply and digital outputs exceeds 200mA**
26	Check total load on digital outputs (terminals 24,25,26)and +24V rail (terminal 22)
O.SPd	**Motor speed has exceeded the over speed threshold**
7	Increase the over speed trip threshold in Pr **3.08** (closed loop vector and servo modes only) Speed has exceeded 1.2 x Pr **1.06** or Pr **1.07** (open loop mode) Reduce the speed loop P gain (Pr **3.10**) to reduce the speed overshoot (closed loop vector and servo modes only)

Trip	Diagnosis
OV	**DC bus voltage has exceeded the peak level or the maximum continuous level for 15 seconds**
2	Increase deceleration ramp (Pr **0.04**) Decrease braking resistor value (staying above the minimum value) Check nominal AC supply level Check for supply disturbances which could cause the DC bus to rise – voltage overshoot after supply recovery from a notch induced by DC drives Check motor insulation **Drive voltage rating** / **Peak voltage** / **Maximum continuous voltage level (15s)** 200 / 415 / 410 400 / 830 / 815 575 / 990 / 970 690 / 1190 / 1175 If the drive is operating in low voltage DC mode the overvoltage trip level is 1.45 x Pr **6.46**.
OV.P	**Power module DC bus voltage has exceeded the peak level or the maximum continuous level for 15 seconds**
106	Increase deceleration ramp (Pr **0.04**) Decrease braking resistor value (staying above the minimum value) Check nominal AC supply level Check for supply disturbances which could cause the DC bus to rise – voltage overshoot after supply recovery from a notch induced by DC drives Check motor insulation **Drive voltage rating** / **Peak voltage** / **Maximum continuous voltage level (15s)** 200 / 415 / 410 400 / 830 / 815 575 / 990 / 970 690 / 1190 / 1175 If the drive is operating in low voltage DC mode the overvoltage trip level is 1.45 x Pr **6.46**.
PAd	**Keypad has been removed when the drive is receiving the speed reference from the keypad**
34	Install keypad and reset Change speed reference selector to select speed reference from another source
PH	**AC voltage input phase loss or large supply imbalance detected**
32	Ensure all three phases are present and balanced Check input voltage levels are correct (at full load) **NOTE** Load level must be between 50 and 100% for the drive to trip under phase loss conditions. The drive will attempt to stop the motor before this trip is initiated.
PH.P	**Power module phase loss detection**
107	Ensure all three phases are present and balanced Check input voltage levels are correct (at full load)
PS	**Internal power supply fault**
5	Remove any Solutions Modules and reset Hardware fault - return drive to supplier
PS.10V	**10V user power supply current greater than 10mA**
8	Check wiring to terminal 4 Reduce load on terminal 4
PS.24V	**24V internal power supply overload**
9	The total user load of the drive and Solutions Modules has exceeded the internal 24V power supply limit. The user load consists of the drive's digital outputs, the SM-I/O Plus digital outputs, the drive's main encoder supply and the SM-Universal Encoder Plus encoder supply. • Reduce load and reset • Provide an external 24V >50W power supply • Remove any Solutions Modules and reset
PS.P	**Power module power supply fail**
108	Remove any Solutions Modules and reset Hardware fault - return drive to supplier
PSAVE.Er	**Power down save parameters in the EEPROM are corrupt**
37	Indicates that the power was removed when power down save parameters were being saved. The drive will revert back to the power down parameter set that was last saved successfully. Perform a user save (Pr **xx.00** to 1000 or 1001 and reset the drive) or power down the drive normally to ensure this trip does or occur the next time the drive is powered up.

Trip	Diagnosis
rS	**Failure to measure resistance during autotune or when starting in open loop vector mode 0 or 3**
33	Check motor power connection continuity
SAVE.Er	**User save parameters in the EEPROM are corrupt**
36	Indicates that the power was removed when user parameters were being saved. The drive will revert back to the user parameter set that was last saved successfully. Perform a user save (Pr **xx.00** to 1000 or 1001 and reset the drive) to ensure this trip does or occur the next time the drive is powered up.
SCL	**Drive RS485 serial comms loss to remote keypad**
30	Reinstall the cable between the drive and keypad Check cable for damage Replace cable Replace keypad
SLX.dF	**Solutions Module slot X trip: Solutions Module type installed in slot X changed**
204,209,214	Save parameters and reset

Trip	Diagnosis
SLX.Er	**Solutions Module slot X trip: Solutions Module in slot X has detected a fault**
202,207,212	**Feedback module category** Check value in Pr **15**/**16**/**17.50**. The following table lists the possible error codes for the SM-Universal Encoder Plus, SM-Encoder Output Plus, SM-Encoder Plus and SM-Resolver. See the *Diagnostics* section in the relevant Solutions Module User Guide for more information.

Error code	Module	Trip Description	Diagnostic
0	All	No trip	No fault detected
1	SM-Universal Encoder Plus & SM-Encoder Output Plus	Encoder power supply overload	Check encoder power supply wiring and encoder current requirement Maximum current = 200mA @ 15V, or 300mA @ 8V and 5V
	SM-Resolver	Excitation output short circuit	Check the excitation output wiring.
2	SM-Universal Encoder Plus & SM-Resolver	Wire break	Check cable continuity Check wiring of feedback signals is correct Check supply voltage or excitation output level Replace feedback device
3	SM-Universal Encoder Plus	Phase offset incorrect while running	Check the encoder signal for noise Check encoder shielding Check the integrity of the encoder mechanical mounting Repeat the offset measurement test
4	SM-Universal Encoder Plus	Feedback device communications failure	Ensure encoder power supply is correct Ensure baud rate is correct Check encoder wiring Replace feedback device
5	SM-Universal Encoder Plus	Checksum or CRC error	Check the encoder signal for noise Check the encoder cable shielding
6	SM-Universal Encoder Plus	Encoder has indicated an error	Replace encoder
7	SM-Universal Encoder Plus	Initialisation failed	Check the correct encoder type is entered into Pr **15**/**16**/**17.15** Check encoder wiring Check supply voltage level Replace feedback device
8	SM-Universal Encoder Plus	Auto configuration on power up has been requested and failed	Change the setting of Pr **15**/**16**/**17.18** and manually enter the number of turns bits (Pr **15**/**16**/**17.09**) and the equivalent number of lines per revolution (Pr **15**/**16**/**17.10**) and the single turn comms bits (Pr **15**/**16**/**17.11**)
9	SM-Universal Encoder Plus	Motor thermistor trip	Check motor temperature Check thermistor continuity
10	SM-Universal Encoder Plus	Motor thermistor short circuit	Check motor thermistor wiring Replace motor / motor thermistor
11	SM-Universal Encoder Plus	Failure of the sincos analog position alignment during encoder initialisation	Check encoder cable shield. Examine sine and cosine signals for noise.
	SM-Resolver	Poles not compatible with motor	Check that the correct number of resolver poles has been set in Pr **15**/**16**/**17.15**.
12	SM-Universal Encoder Plus	Encoder type could not be identified during auto-configuration	Check encoder type can be auto-configured. Check encoder wiring. Enter parameters manually.
13	SM-Universal Encoder Plus	Number of encoder turns read from the encoder during auto-configuration is not a power of 2	Select a different type of encoder.
14	SM-Universal Encoder Plus	Number of comms bits defining the encoder position within a turn read from the encoder during auto-configuration is too large.	Select a different type of encoder. Faulty encoder.
15	SM-Universal Encoder Plus	The number of periods per revolution calculated from encoder data during auto-configuration is either <2 or >50,000.	Linear motor pole pitch / encoder ppr set up is incorrect or out of parameter range i.e. Pr **5.36** = 0 or Pr **21.31** = 0. Faulty encoder.
16	SM-Universal Encoder Plus	The number of comms bits per period for a linear encoder exceeds 255.	Select a different type of encoder. Faulty encoder.
74	All	Solutions Module has overheated	Check ambient temperature Check enclosure ventilation

Trip	Diagnosis
SLX.Er	**Solutions Module slot X trip: Solutions Module in slot X has detected a fault**
202,207,212	**Automation (Applications) module category** Check value in Pr **15**/**16**/**17.50**. The following table lists the possible error codes for the SM-Applications and SM-Applications Lite. See the *Diagnostics* section in the relevant Solutions Module User Guide for more information.

Error Code	Trip Description
39	User program stack overflow
40	Unknown error - please contact supplier
41	Parameter does not exist
42	Attempt to write to a read-only parameter
43	Attempt to read from a write-only parameter
44	Parameter value out of range
45	Invalid synchronisation modes
46	Unused
48	RS485 not in user mode
49	Invalid RS485 configuration
50	Maths error - divide by zero or overflow
51	Array index out of range
52	Control word user trip
53	DPL program incompatible with target
54	DPL task overrun
55	Unused
56	Invalid timer unit configuration
57	Function block does not exist
58	Flash PLC Storage corrupt
59	Drive rejected application module as Sync master
60	CTNet hardware failure. Please contact your supplier
61	CTNet invalid configuration
62	CTNet invalid baud-rate
63	CTNet invalid node ID
64	Digital Output overload
65	Invalid function block parameter(s)
66	User heap too large
67	RAM file does not exist or a non-RAM file id has been specified
68	The RAM file specified is not associated to an array
69	Failed to update drive parameter database cache in Flash memory
70	User program downloaded while drive enabled
71	Failed to change drive mode
72	Invalid CTNet buffer operation
73	Fast parameter initialisation failure
74	Over-temperature
75	Hardware unavailable
76	Module type cannot be resolved. Module is not recognised.
77	Inter-option module comms error with module in slot 1
78	Inter-option module comms error with module in slot 2
79	Inter-option module comms error with module in slot 3
80	Inter-option module comms error with module unknown slot
81	APC internal error
82	Communications to drive faulty

Trip	Diagnosis
SLX.Er	**Solutions Module slot X trip: Solutions Module in slot X has detected a fault**
202,207,212	**Automation (I/O Expansion) module category** Check value in Pr **15**/**16**/**17.50**. The following table lists the possible error codes for the SM-I/O Plus, SM-I/O Lite, SM-I/O Timer, SM-I/O PELV, SM-I/O 120V, SM-I/O 32 and SM-I/O 24V Protected. See the *Diagnostics* section in the relevant Solutions Module User Guide for more information.

Error code	Module	Reason for fault
0	All	No errors
1	All	Digital output overload
2	SM-I/O Lite, SM-I/O Timer	Analog input 1 current input too high (>22mA) or too low (<3mA)
	SM-I/O PELV, SM-I/O 24V Protected	Digital input overload
3	SM-I/O PELV, SM-I/O 24V Protected	Analog input 1 current input too low (<3mA)
	SM-I/O 24V Protected	Communications error
4	SM-I/O PELV	User power supply absent
5	SM-I/O Timer	Real time clock communication error
74	All	Module over temperature

SLX.Er	**Solutions Module slot X trip: Solutions Module in slot X has detected a fault**
202,207,212	**Fieldbus module category** Check value in Pr **15**/**16**/**17.50**. The following table lists the possible error codes for the Fieldbus modules. See the *Diagnostics* section in the relevant Solutions Module User Guide for more information.

Error code	Module	Trip Description
0	All	No trip
1	SM-EtherCAT	No fieldbus mode has been selected
2	SM-EtherCAT	Critical task over-run
52	SM-PROFIBUS DP-V1, SM-INTERBUS, SM-DeviceNet, SM-CANOpen	User control word trip
58	SM-LON	Incorrect non-volatile storage
61	SM-PROFIBUS DP-V1, SM-INTERBUS, SM-DeviceNet, SM-CANOpen, SM-SERCOS, SM-LON	Configuration error
62	SM-EtherCAT	Database initialization error
63	SM-EtherCAT	File system initialization error
64	SM-DeviceNet	Expected packet rate timeout
65	SM-PROFIBUS DP-V1, SM-INTERBUS, SM-DeviceNet, SM-CANOpen, SM-SERCOS, SM-LON	Network loss
66	SM-PROFIBUS DP-V1	Critical link failure
	SM-CAN, SM-DeviceNet, SM-CANOpen	Bus off error
69	SM-CAN, SM-EtherCAT	No acknowledgement
70	All (except SM-Ethernet and SM-LON)	Flash transfer error
	SM-Ethernet, SM-LON	No valid menu data available for the module from the drive
74	All	Solutions module over temperature
75	SM-Ethernet, SM-EtherCAT	The drive is not responding
76	SM-Ethernet, SM-EtherCAT	The Modbus connection has timed out
80	All (except SM-SERCOS)	Inter-option communications error
81	All (except SM-SERCOS)	Communications error to slot 1
82	All (except SM-SERCOS)	Communications error to slot 2
83	All (except SM-SERCOS)	Communications error to slot 3
84	SM-Ethernet, SM-EtherCAT	Memory allocation error
85	SM-Ethernet, SM-EtherCAT	File system error
86	SM-Ethernet, SM-EtherCAT	Configuration file error
87	SM-Ethernet	Language file error
97	SM-Ethernet	Timed event over-run
98	All	Internal watchdog error
99	All	Internal software error

<table>
<tr><th>Trip</th><th>Diagnosis</th></tr>
<tr><td>SLX.Er</td><td>Solutions Module slot X trip: Solutions Module in slot X has detected a fault</td></tr>
<tr><td>202,207,212</td><td>SLM module category
Check value in Pr 15/16/17.50. The following table lists the possible error codes for the SM-SLM. See the Diagnostics section in the SM-SLM User Guide for more information.
<table>
<tr><th>Error Code</th><th>Trip Description</th></tr>
<tr><td>0</td><td>No fault detected</td></tr>
<tr><td>1</td><td>Power supply overloaded</td></tr>
<tr><td>2</td><td>SLM version is too low</td></tr>
<tr><td>3</td><td>DriveLink error</td></tr>
<tr><td>4</td><td>Incorrect switching frequency selected</td></tr>
<tr><td>5</td><td>Feedback source selection incorrect</td></tr>
<tr><td>6</td><td>Encoder error</td></tr>
<tr><td>7</td><td>Motor object number of instances error</td></tr>
<tr><td>8</td><td>Motor object list version error</td></tr>
<tr><td>9</td><td>Performance object number of instances error</td></tr>
<tr><td>10</td><td>Parameter channel error</td></tr>
<tr><td>11</td><td>Drive operating mode incompatible</td></tr>
<tr><td>12</td><td>Error writing to the SLM EEPROM</td></tr>
<tr><td>13</td><td>Motor object type incorrect</td></tr>
<tr><td>14</td><td>Unidrive SP object error</td></tr>
<tr><td>15</td><td>Encoder object CRC error</td></tr>
<tr><td>16</td><td>Motor object CRC error</td></tr>
<tr><td>17</td><td>Performance object CRC error</td></tr>
<tr><td>18</td><td>Unidrive SP object CRC error</td></tr>
<tr><td>19</td><td>Sequencer timeout</td></tr>
<tr><td>74</td><td>Solutions module over temperature</td></tr>
</table></td></tr>
<tr><td>SLX.HF</td><td>Solutions Module slot X trip: Solutions Module X hardware fault</td></tr>
<tr><td>200,205,210</td><td>Ensure Solutions Module is installed correctly
Return Solutions Module to supplier</td></tr>
<tr><td>SLX.nF</td><td>Solutions Module slot X trip: Solutions Module has been removed</td></tr>
<tr><td>203,208,213</td><td>Ensure Solutions Module is installed correctly
Reinstall Solutions Module
Save parameters and reset drive</td></tr>
<tr><td>SL.rtd</td><td>Solutions Module trip: Drive mode has changed and Solutions Module parameter routing is now incorrect</td></tr>
<tr><td>215</td><td>Press reset.
If the trip persists, contact the supplier of the drive.</td></tr>
<tr><td>SLX.tO</td><td>Solutions Module slot X trip: Solutions Module watchdog timeout</td></tr>
<tr><td>201,206,211</td><td>Press reset.
If the trip persists, contact the supplier of the drive.</td></tr>
<tr><td>t038</td><td>User trip defined in 2nd processor Solutions Module code</td></tr>
<tr><td>38</td><td>SM-Applications program must be interrogated to find the cause of this trip</td></tr>
<tr><td>t040 to t089</td><td>User trip defined in 2nd processor Solutions Module code</td></tr>
<tr><td>40 to 89</td><td>SM-Applications program must be interrogated to find the cause of this trip</td></tr>
<tr><td>t099</td><td>User trip defined in 2nd processor Solutions Module code</td></tr>
<tr><td>99</td><td>SM-Applications program must be interrogated to find the cause of this trip</td></tr>
<tr><td>t101</td><td>User trip defined in 2nd processor Solutions Module code</td></tr>
<tr><td>101</td><td>SM-Applications program must be interrogated to find the cause of this trip</td></tr>
<tr><td>t112 to t160</td><td>User trip defined in 2nd processor Solutions Module code</td></tr>
<tr><td>112 to 160</td><td>SM-Applications program must be interrogated to find the cause of this trip</td></tr>
<tr><td>t168 to t174</td><td>User trip defined in 2nd processor Solutions Module code</td></tr>
<tr><td>168 to 174</td><td>SM-Applications program must be interrogated to find the cause of this trip</td></tr>
</table>

Trip	Diagnosis
t216	**User trip defined in 2nd processor Solutions Module code**
216	SM-Applications program must be interrogated to find the cause of this trip
th	**Motor thermistor trip**
24	Check motor temperature Check thermistor continuity Set Pr **7.15** = VOLt and reset the drive to disable this function
thS	**Motor thermistor short circuit**
25	Check motor thermistor wiring Replace motor / motor thermistor Set Pr **7.15** = VOLt and reset the drive to disable this function
tunE*	**Autotune stopped before completion**
18	The drive has tripped out during the autotune The red stop key has been pressed during the autotune The SAFE TORQUE OFF signal (terminal 31) was active during the autotune procedure
tunE1*	**The position feedback did not change or required speed could not be reached during the inertia test (see Pr 5.12)**
11	Ensure the motor is free to turn i.e. brake was released Ensure Pr **3.26** and Pr **3.38** are set correctly Check feedback device wiring is correct Check encoder coupling to motor
tunE2*	**Position feedback direction incorrect or motor could not be stopped during the inertia test (see Pr 5.12)**
12	Check motor cable wiring is correct Check feedback device wiring is correct Swap any two motor phases
tunE3*	**Drive encoder commutation signals connected incorrectly or measured inertia out of range (see Pr 5.12)**
13	Check motor cable wiring is correct Check feedback device U,V and W commutation signal wiring is correct
tunE4*	**Drive encoder U commutation signal fail during an autotune**
14	Check feedback device U phase commutation wires continuity Replace encoder
tunE5*	**Drive encoder V commutation signal fail during an autotune**
15	Check feedback device V phase commutation wires continuity Replace encoder
tunE6*	**Drive encoder W commutation signal fail during an autotune**
16	Check feedback device W phase commutation wires continuity Replace encoder
tunE7*	**Motor number of poles set incorrectly**
17	Check lines per revolution for feedback device Check the number of poles in Pr **5.11** is set correctly
Unid.P	**Power module unidentified trip**
110	Check all interconnecting cables between power modules Ensure cables are routed away from electrical noise sources
UP ACC	**Onboard PLC program: cannot access Onboard PLC program file on drive**
98	Disable drive - write access is not allowed when the drive is enabled Another source is already accessing Onboard PLC program - retry once other action is complete
UP div0	**Onboard PLC program attempted divide by zero**
90	Check program
UP OFL	**Onboard PLC program variables and function block calls using more than the allowed RAM space (stack overflow)**
95	Check program
UP ovr	**Onboard PLC program attempted out of range parameter write**
94	Check program
UP PAr	**Onboard PLC program attempted access to a non-existent parameter**
91	Check program
UP ro	**Onboard PLC program attempted write to a read-only parameter**
92	Check program

Trip	Diagnosis
UP So	**Onboard PLC program attempted read of a write-only parameter**
93	Check program
UP udF	**Onboard PLC program un-defined trip**
97	Check program
UP uSEr	**Onboard PLC program requested a trip**
96	Check program
UV	**DC bus under voltage threshold reached**
1	Check AC supply voltage level **Drive voltage rating (Vac) / Under voltage threshold (Vdc) / UV reset voltage (Vdc)** 200 / 175 / 215V 400 / 330 / 425V 575 & 690 / 435 / 590V

*If a tunE through tunE 7 trip occurs, then after the drive is reset the drive cannot be made to run unless it is disabled via the SAFE TORQUE OFF input (terminal 31), drive enable parameter (Pr **6.15**) or the control word (Pr **6.42** and Pr **6.43**).

Table 13-2 Serial communications look-up table

No.	Trip	No.	Trip	No.	Trip
1	UV	40 to 89	t040 to t089	182	C.Err
2	OV	90	UP div0	183	C.dAt
3	OI.AC	91	UP PAr	184	C.FULL
4	OI.br	92	UP ro	185	C.Acc
5	PS	93	UP So	186	C.rtg
6	Et	94	UP ovr	187	C.TyP
7	O.SPd	95	UP OFL	188	C.cPr
8	PS.10V	96	UP uSEr	189	EnC1
9	PS.24V	97	UP udF	190	EnC2
10	br.th	98	UP ACC	191	EnC3
11	tunE1	99	t099	192	EnC4
12	tunE2	100		193	EnC5
13	tunE3	101	t101	194	EnC6
14	tunE4	102	Oht4.P	195	EnC7
15	tunE5	103	OIbr.P	196	EnC8
16	tunE6	104	OIAC.P	197	EnC9
17	tunE7	105	Oht2.P	198	EnC10
18	tunE	106	OV.P	199	DESt
19	It.br	107	PH.P	200	SL1.HF
20	It.AC	108	PS.P	201	SL1.tO
21	O.ht1	109	OIdC.P	202	SL1.Er
22	O.ht2	110	Unid.P	203	SL1.nF
23	O.CtL	111	ConF.P	204	SL1.dF
24	th	112 to 160	t112 to t160	205	SL2.HF
25	thS	161	Enc11	206	SL2.tO
26	O.Ld1	162	Enc12	207	SL2.Er
27	O.ht3	163	Enc13	208	SL2.nF
28	cL2	164	Enc14	209	SL2.dF
29	cL3	165	Enc15	210	SL3.HF
30	SCL	166	Enc16	211	SL3.tO
31	EEF	167	Enc17	212	SL3.Er
32	PH	168 to 174	t168 to t174	213	SL3.nF
33	rS	175	C.Prod	214	SL3.dF
34	PAd	176	EnP.Er	215	SL.rtd
35	CL.bit	177	C.boot	216	t216
36	SAVE.Er	178	C.bUSY	217 to 232	HF17 to HF32
37	PSAVE.Er	179	C.Chg		
38	t038	180	C.OPtn		
39	L.SYnC	181	C.RdO		

The trips can be grouped into the following categories. It should be noted that a trip can only occur when the drive is not tripped or is already tripped but with a trip with a lower priority number.

Table 13-3 Trip categories

Priority	Category	Trips	Comments
1	Hardware faults	HF01 to HF16	These indicate serious internal problems and cannot be reset. The drive is inactive after one of these trips and the display shows **HFxx**. The Drive OK relay opens and the serial comms will not function.
2	Non-resetable trips	HF17 to HF32, SL1.HF, SL2.HF, SL3.HF	Cannot be reset. Requires the drive to be powered down.
3	EEF trip	EEF	Cannot be reset unless a code to load defaults is first entered in Pr **xx.00** or Pr **11.43**.
4	SMARTCARD trips	C.boot, C.Busy, C.Chg, C.OPtn, C.RdO, C.Err, C.dat, C.FULL, C.Acc, C.rtg, C.TyP, C.cpr, C.Prod	Can be reset after 1.0s SMARTCARD trips have priority 5 during power-up
4	Encoder power supply trips	PS.24V, EnC1	Can be reset after 1.0s These trips can only override the following priority 5 trips: EnC2 to EnC8 or Enc11 to Enc17
5	Autotune	tunE, tunE1 to tunE7	Can be reset after 1.0s, but the drive cannot be made to run unless it is disabled via the SAFE TORQUE OFF input (terminal 31), *Drive enable* (Pr **6.15**) or the *Control word* (Pr **6.42** and Pr **6.43**).
5	Normal trips with extended reset	OI.AC, OI.Br, OIAC.P, OIBr.P, OIdC.P	Can be reset after 10.0s
5	Normal trips	All other trips not included in this table	Can be reset after 1.0s
5	Non-important trips	th, thS, Old1, cL2, cL3, SCL	If Pr **10.37** is 1 or 3 (i.e. bit 0 set to 1), the drive will stop before tripping
5	Phase loss	PH	The drive attempts to stop before tripping
5	Drive over-heat based on thermal model	O.ht3	The drive attempts to stop before tripping, but if it does not stop within 10s the drive will automatically trip
6	Self-resetting trips	UV	Under voltage trip cannot be reset by the user, but is automatically reset by the drive when the supply voltage is with specification

Although the UV trip operates in a similar way to all other trips, all drive functions can still operate but the drive cannot be enabled. The following differences apply to the UV trip:

1. Power-down save user parameters are saved when UV trip is activated except when the main high voltage supply is not active (i.e. operating in Low Voltage DC Supply Mode, Pr **6.44** = 1).
2. The UV trip is self-resetting when the DC bus voltage rises above the drive restart voltage level. If another trip is active instead of UV at this point, the trip is not reset.
3. The drive can change between using the main high voltage supply and low voltage DC supply only when the drive is in the under voltage condition (Pr **10.16** = 1). The UV trip can only be seen as active if another trip is not active in the under voltage condition.
4. When the drive is first powered up a UV trip is initiated if the supply voltage is below the restart voltage level and another trip is not active. This does not cause save power down save parameters to be saved at this point.

13.2 Alarm indications

In any mode an alarm flashes alternately with the data displayed on the 2nd row when one of the following conditions occur. If action is not taken to eliminate any alarm except "Autotune", "Lt" and "PLC" the drive may eventually trip. Alarms flash once every 640ms except "PLC" which flashes once every 10s. Alarms are not displayed when a parameter is being edited.

Table 13-4 Alarm indications

Lower display	Description
br.rS	Braking resistor overload
Braking resistor I^2t accumulator (Pr **10.39**) in the drive has reached 75.0% of the value at which the drive will trip and the braking IGBT is active.	
Hot	Heatsink or control board or inverter IGBT over temperature alarms are active
• The drive heatsink temperature has reached a threshold and the drive will trip O.ht2 if the temperature continues to rise (see the O.ht2 trip). Or • The ambient temperature around the control PCB is approaching the over temperature threshold (see the O.CtL trip).	
OVLd	Motor overload
The motor I^2t accumulator (Pr **4.19**) in the drive has reached 75% of the value at which the drive will be tripped and the load on the drive is >100%	
Auto tune	Autotune in progress
The autotune procedure has been initialised. 'Auto' and 'tunE' will flash alternatively on the display.	
Lt	Limit switch is active
Indicates that a limit switch is active and that it is causing the motor to be stopped (i.e. forward limit switch with forward reference etc.)	
PLC	Onboard PLC program is running
An Onboard PLC program is installed and running. The lower display will flash 'PLC' once every 10s.	

13.3 Status indications

Table 13-5 Status indications

Upper display	Description	Drive output stage
ACt	Regeneration mode active	Enabled
The regen unit is enabled and synchronised to the supply.		
ACUU	AC Supply loss	Enabled
The drive has detected that the AC supply has been lost and is attempting to maintain the DC bus voltage by decelerating the motor.		
dc	DC applied to the motor	Enabled
The drive is applying DC injection braking.		
dEC	Decelerating	Enabled
The drive is decelerating the motor.		
inh	Inhibit	Disabled
The drive is inhibited and cannot be run. The drive enable signal is not applied to terminal 31 or Pr **6.15** is set to 0.		
POS	Positioning	Enabled
The drive is positioning/orientating the motor shaft.		
rdY	Ready	Disabled
The drive is ready to be run.		
run	Running	Enabled
The drive is running.		
SCAn	Scanning	Enabled
Regen> The drive is enabled and is synchronising to the line.		
StoP	Stop or holding zero speed	Enabled
The drive is holding zero speed. Regen> The drive is enabled but the AC voltage is too low, or the DC bus voltage is still rising or falling.		
triP	Trip condition	Disabled
The drive has tripped and is no longer controlling the motor. The trip code appears on the lower display.		

Table 13-6 Solutions Module and SMARTCARD status indications at power-up

Lower display	Description
boot	
A parameter set is being transferred from the SMARTCARD to the drive during power-up. For further information, please refer to section 9.2.4 *Booting up from the SMARTCARD on every power up (Pr 11.42 = boot (4))* on page 152.	
cArd	
The drive is writing a parameter set to the SMARTCARD during power-up. For further information, please refer to section 9.2.3 *Auto saving parameter changes (Pr 11.42 = Auto (3))* on page 152.	
loAding	
The drive is writing information to a Solutions Module.	

13.4 Displaying the trip history

The drive retains a log of the last 10 trips that have occurred in Pr **10.20** to Pr **10.29** and the corresponding multi-module drive module number (Pr **6.49** = 0) or the trip time (Pr **6.49** = 1) for each trip in Pr **10.41** to Pr **10.51**. The time of the trip is recorded from the powered-up clock (if Pr **6.28** = 0) or from the run time clock (if Pr **6.28** = 1).

Pr **10.20** is the most recent trip, or the current trip if the drive is in a trip condition (with the module number or trip time stored in Pr **10.41** and Pr **10.42**). Pr **10.29** is the oldest trip (with the module number or trip time stored in Pr **10.51**). Each time a new trip occurs, all the parameters move down one, such that the current trip (and time) is stored in Pr **10.20** (and Pr **10.41** to Pr **10.42**) and the oldest trip (and time) is lost out of the bottom of the log.

If any parameter between Pr **10.20** and Pr **10.29** inclusive is read by serial communications, then the trip number in Table 13-1 *Trip indications* on page 284 is the value transmitted.

13.5 Behaviour of the drive when tripped

If the drive trips, the output of the drive is disabled so that the drive stops controlling the motor. If any trip occurs (except the UV trip) the following read only parameters are frozen until the trip is cleared. This is to help in diagnosing the cause of the trip.

Parameter	Description
1.01	Frequency/speed reference
1.02	Pre-skip filter reference
1.03	Pre-ramp reference
2.01	Post-ramp reference
3.01	Frequency slaving demand/Final speed ref
3.02	Speed feedback
3.03	Speed error
3.04	Speed controller output
4.01	Current magnitude
4.02	Active current
4.17	Reactive current
5.01	Output frequency
5.02	Output voltage
5.03	Power
5.05	DC bus voltage
7.01	Analog input 1
7.02	Analog input 2
7.03	Analog input 3

Analog and digital I/O
The analog and digital I/O on the drive continue to work correctly if a trip occurs, except the digital outputs will go low if one of the following trips occur: O.Ld1, PS.24V.

Drive logic functions
The drive logic functions (i.e. PID, variable selectors, threshold detectors, etc.) continue to operate when the drive is tripped.

Onboard PLC program
The Onboard PLC program continues to run if the drive is tripped, except if one of Onboard PLC program trips occur.

Braking IGBT
The braking IGBT continues to operate even when the output of the drive is not enabled (except if the low voltage DC supply is being used), but is only disabled if any of the following trips occurs or would occur if another trip had not already become active: OI.Br, PS, It.Br, OV or any HFxx trip.

14 UL Listing Information

Size 0 to 6 drives have been assessed to meet both UL and cUL requirements.

The Control Techniques UL file number is E171230. Confirmation of UL listing can be found on the UL website: www.ul.com.

14.1 Common UL information

Conformity

The drive conforms to UL listing requirements only when the following are observed:

- The drive is installed in a type 1 enclosure, or better, as defined by UL50
- The surrounding air temperature does not exceed 40°C (104°F) when the drive is operating
- The terminal tightening torques specified in section 3.12.2 *Terminal sizes and torque settings* on page 65
- If the drive control stage is supplied by an external power supply (+24V), the external power supply must be a UL Class 2 power supply

Motor overload protection

The drive provides motor overload protection. The default overload protection level is no higher than 150% of full-load current (FLC) of the drive in open loop mode and no higher than 175% of full-load current (FLC) of the drive in closed loop vector or servo modes. It is necessary for the motor rated current to be entered into Pr **0.46** (or Pr **5.07**) for the protection to operate correctly. The protection level may be adjusted below 150% if required. Refer to section 8.3 *Current limits* on page 147 for more information. The drive also provides motor thermal protection. Refer to section 8.4 *Motor thermal protection* on page 147.

Overspeed Protection

The drive provides overspeed protection. However, it does not provide the level of protection afforded by an independent high integrity overspeed protection device.

14.2 Power dependant UL information

Conformity

The drive conforms to UL listing requirements only when the following is observed.

Fuses

Size 0 to 3

- The correct UL-listed fast acting fuses (class CC or class J up to 30A and class J above 30A), e.g. Bussman Limitron KTK-R series, Ferraz Shawmut ATMR series or equivalent, are used in the AC supply. The drive does not comply with UL if MCBs are used in place of fuses.

For further details on fusing, refer to in Table 4-3 and Table 4-4 on page 74.

Size 4 to 6

- The UL-listed Ferraz HSJ (High speed J class) fuses are used in the AC supply. The drive does not comply with UL if any other fuses or MCBs are used in place of those stated.

For further details on fusing, refer to Table 4-5 on page 75.

Field wiring

Size 0 to 4

- Class 1 60/75°C (140/167°F) copper wire only is used in the installation

Size 5 and 6

- Class 1 75°C (167°F) copper wire only is used in the installation

Field wiring connectors

Sizes 4 to 6

- UL listed wire connectors are used for terminating power circuit field wiring, e.g. Ilsco TA series

14.3 AC supply specification

The drive is suitable for use in a circuit capable of delivering not more than 100,000rms symmetrical Amperes at 264Vac rms maximum (200V drives), 528Vac rms maximum (400V drives) or 600Vac rms maximum (575V and 690V drives).

14.4 Maximum continuous output current

The drive models are listed as having the maximum continuous output currents (FLC) shown in Table 14-1, Table 14-2, Table 14-3 and Table 14-4 (see Chapter 12 *Technical Data* on page 265 for details).

Table 14-1 Maximum continuous output current (200V drives)

Model	FLC (A)	Model	FLC (A)
0201	2.2	2201	15.5
0202	3.1	2202	22
0203	4.0	2203	28
0204	5.7	3201	42
0205	7.5	3202	54
1201	5.2	4201	68
1202	6.8	4202	80
1203	9.6	4203	104
1204	11	5201	130
		5202	154

Table 14-2 Maximum continuous output current (400V drives)

Model	FLC (A)	Model	FLC (A)
0401	1.3	2401	15.3
0402	1.7	2402	21
0403	2.1	2403	29
0404	3.0	2404	29
0405	4.2	3401	35
1401	2.8	3402	43
1402	3.8	3403	56
1403	5.0	4401	68
1404	6.9	4402	83
1405	8.8	4403	104
1406	11	5401	138
		5402	168
		6401	205
		6402	236

Table 14-3 Maximum continuous output current (575V drives)

Model	FLC (A)	Model	FLC (A)
3501	5.4	3505	16
3502	6.1	3506	22
3503	8.3	3507	27
3504	11		

Table 14-4 Maximum continuous output current (690V drives)

Model	FLC (A)	Model	FLC (A)
4601	22	5601	84
4602	27	5602	99
4603	36	6601	125
4604	43	6602	144
4605	52		
4606	62		

14.5 Safety label

The safety label supplied with the connectors and mounting brackets must be placed on a fixed part inside the drive enclosure where it can be seen clearly by maintenance personnel for UL compliance.

The label clearly states “CAUTION Risk of Electric Shock Power down unit 10 minutes before removing cover”.

14.6 UL listed accessories

- SM-Keypad
- SM-Keypad Plus
- SM-I/O Plus
- SM-I/O Lite
- SM-Ethernet
- SM-CANopen
- SM-Universal Encoder Plus
- SM-Resolver
- SM-Encoder Plus
- SM-Encoder Output Plus
- 15-way D-type converter
- SM-Applications Plus
- SM-SERCOS
- SM-EtherCAT
- SM-PROFIBUS-DP-V1
- SM-DeviceNet
- SM-I/O Timer
- SM-I/O 120V
- SM-CAN
- SM-INTERBUS
- SM-Applications Lite
- SM-Applications Lite-V2
- SM-SLM
- SM-Applications
- SM-I/O PELV
- SM-LON
- SM-I/O 24V Protected
- SM-I/O 32

List of figures

Figure 2-1 Features of the size 0 drive 19
Figure 2-2 Features of the size 1 to 6 drive 20
Figure 2-3 Typical drive rating labels for size 0 21
Figure 2-4 Typical drive rating labels for size 1 to 6 drives 22
Figure 2-5 Options available with Unidrive SP 23
Figure 3-1 Fire enclosure bottom layout 28
Figure 3-2 Fire enclosure baffle construction 28
Figure 3-3 Location and identification of terminal covers ...30
Figure 3-4 Removing the size 1 terminal covers 31
Figure 3-5 Removing the size 2 terminal covers 31
Figure 3-6 Removing the size 3 terminal covers 31
Figure 3-7 Removing the size 4, 5 and 6 terminal covers (size 4 illustrated) 32
Figure 3-8 Removing the finger-guard break-outs 32
Figure 3-9 Removing the DC terminal cover break-outs 32
Figure 3-10 Size 4 to 6 finger-guard grommets 33
Figure 3-11 Installation of a Solutions Module on size 0 35
Figure 3-12 Installation and removal of a Solutions Module on size 1 to 6 35
Figure 3-13 Installation of a keypad on size 0 36
Figure 3-14 Installation and removal of a keypad on size 1 to 6 36
Figure 3-15 Mounting the size 0 using a DIN rail 37
Figure 3-16 Ingress protection 38
Figure 3-17 Surface mounting the size 0 drive 38
Figure 3-18 Surface mounting the size 1 drive 39
Figure 3-19 Surface mounting the size 2 drive 39
Figure 3-20 Surface mounting the size 3 drive 40
Figure 3-21 Surface mounting the size 4 drive 40
Figure 3-22 Surface mounting the size 5 drive 41
Figure 3-23 Surface mounting the size 6 drive 42
Figure 3-24 Through-panel mounting the size 1 drive 43
Figure 3-25 Through-panel mounting the size 2 drive 43
Figure 3-26 Through-panel mounting the size 3 drive 44
Figure 3-27 Through-panel mounting the size 4 drive 44
Figure 3-28 Through-panel mounting the size 5 drive 45
Figure 3-29 Through-panel mounting the size 6 drive 46
Figure 3-30 Size 4, 5 and 6 mounting bracket 47
Figure 3-31 Orientation of the size 4, 5 and 6 mounting bracket 47
Figure 3-32 Location of top surface mounting brackets for size 5 and 6 47
Figure 3-33 Enclosure layout 48
Figure 3-34 Enclosure having front, sides and top panels free to dissipate heat 49
Figure 3-35 Example of IP54 (UL Type 12 / NEMA 12) through-panel layout 50
Figure 3-36 Installing the gasket 50
Figure 3-37 Installation of IP54 insert for size 1 51
Figure 3-38 Installation of IP54 insert for size 2 51
Figure 3-39 Option 2 for achieving IP54 (UL type 12 / NEMA 12) through-panel mounting 52
Figure 3-40 Option 3 for achieving IP54 (UL type 12 / NEMA 12) through panel mounting 53
Figure 3-41 Footprint mounting the EMC filter 54
Figure 3-42 Bookcase mounting the EMC filter 54
Figure 3-43 Size 4 to 6 mounting of EMC filter 54
Figure 3-44 Size 0 external EMC filter 55
Figure 3-45 Size 1 external EMC filter 55
Figure 3-46 Size 2 external EMC filter 56
Figure 3-47 Size 3 external EMC filter 57
Figure 3-48 Size 4 and 5 external EMC filter 58
Figure 3-49 Size 6 external EMC filter 59
Figure 3-50 Installing an optional internal braking resistor (top view of drive) 60
Figure 3-51 Through-panel mounting cut-out details for size 1 61
Figure 3-52 Through-panel mounting cut-out details for size 2 61
Figure 3-53 Installing the heatsink mounted braking resistor on size 1 61
Figure 3-54 Connecting the brake resistor on a surface mounted size 1 61
Figure 3-55 Connecting the brake resistor on a through-panel mounted size 1 62
Figure 3-56 Removing the baffle plate on a size 2 62
Figure 3-57 Modifying the fan baffle on a size 2 62
Figure 3-58 Installing the heatsink mounted braking resistor on a size 2 62
Figure 3-59 Connecting the brake resistor on a surface mounted size 2 63
Figure 3-60 Connecting the brake resistor on a through-panel mounted size 2 63
Figure 3-61 Locations of the power and ground terminals .. 64
Figure 4-1 Size 0 power connections 67
Figure 4-2 Size 1 power connections 68
Figure 4-3 Size 2 power connections 68
Figure 4-4 Size 3 power connections 69
Figure 4-5 Size 4, 5 and 6 power connections 69
Figure 4-6 Size 2 ground connections 70
Figure 4-7 Size 3 ground connections 70
Figure 4-8 Size 4, 5 and 6 ground connections 71
Figure 4-9 Location of the size 6 heatsink fan supply connections 72
Figure 4-10 Size 6 heatsink fan supply connections 72
Figure 4-11 Cable construction influencing the capacitance 77
Figure 4-12 Preferred chain connection for multiple motors 77
Figure 4-13 Alternative connection for multiple motors 78
Figure 4-14 Typical protection circuit for a braking resistor . 80
Figure 4-15 Use of the EMC bracket on size 0 82
Figure 4-16 Installation of grounding clamp (size 1 and 2) . 82
Figure 4-17 Installation of grounding clamp (size 3) 82
Figure 4-18 Installation of grounding bracket (size 0) 82
Figure 4-19 Installation of grounding bracket (sizes 1 to 6) 82
Figure 4-20 Size 4 and 5 grounding link bracket in its surface mount position (as supplied) 83
Figure 4-21 Size 4 and 5 grounding link bracket folded up into its through- panel mount position 83
Figure 4-22 Removal of internal EMC filter and line to ground varistors (size 0) 83
Figure 4-23 Removal of internal EMC filter (size 1 to 3) 84
Figure 4-24 Removal of internal EMC filter (sizes 4 to 6) 84
Figure 4-25 General EMC enclosure layout showing ground connections 84
Figure 4-26 Drive cable clearances 85
Figure 4-27 Feedback cable, twisted pair 85
Figure 4-28 Feedback cable connections 86
Figure 4-29 Supply and ground cable clearance (size 0 to 3) 87
Figure 4-30 Supply and ground cable clearance (size 4 to 6) 87
Figure 4-31 Sensitive signal circuit clearance 88
Figure 4-32 Grounding the drive, motor cable shield and filter 88

Figure 4-33 Grounding the motor cable shield 88
Figure 4-34 Shielding requirements of optional external braking resistor 88
Figure 4-35 Grounding of signal cable shields using the grounding bracket 89
Figure 4-36 Connecting the motor cable to a terminal block in the enclosure 89
Figure 4-37 Connecting the motor cable to an isolator / disconnect switch 89
Figure 4-38 Surge suppression for digital and unipolar inputs and outputs 90
Figure 4-39 Surge suppression for analog and bipolar inputs and outputs 90
Figure 4-40 Location of the RJ45 serial comms connector 90
Figure 4-41 Default terminal functions 92
Figure 4-42 Access to encoder connections 94
Figure 4-43 Location of encoder connector (size 0) 95
Figure 4-44 Connecting the encoder ground tab to the EMC bracket 95
Figure 4-45 Location of encoder connector 95
Figure 4-46 Location of the size 4 to 6 low voltage DC mode enable connections 98
Figure 4-47 Size 4 and 5 low voltage DC mode enable connections 98
Figure 4-48 Size 6 low voltage DC mode enable connections 98
Figure 5-1 SM-Keypad 100
Figure 5-2 SM-Keypad Plus 100
Figure 5-3 SPO Keypad 100
Figure 5-4 Display modes 101
Figure 5-5 Mode examples 101
Figure 5-6 Parameter navigation 102
Figure 5-7 Menu structure 102
Figure 5-8 Menu 0 copying 102
Figure 6-1 Menu 0 logic diagram 110
Figure 6-2 Fixed and variable V/f characteristics 114
Figure 7-1 Minimum connections to get the motor running in any operating mode (size 0) 123
Figure 7-2 Minimum connections to get the motor running in any operating mode (size 1 to 3) ...124
Figure 7-3 Minimum connections to get the motor running in any operating mode (size 4 to 6) ...125
Figure 8-1 Motor thermal protection (Heavy Duty) 147
Figure 8-2 Motor thermal protection (Normal Duty) 147
Figure 8-3 Torque and rated voltage against speed 148
Figure 9-1 Installation of the SMARTCARD 150
Figure 9-2 Basic SMARTCARD operation 151
Figure 10-1 Onboard PLC program scheduling 157
Figure 10-2 Programming options for Unidrive SP 158
Figure 11-1 Menu 1 logic diagram 168
Figure 11-2 Menu 2 logic diagram 172
Figure 11-3 Menu 3 Open-loop logic diagram 175
Figure 11-4 Menu 3 Closed loop logic diagram 176
Figure 11-5 Menu 4 Open loop logic diagram 180
Figure 11-6 Menu 4 Closed-loop vector logic diagram 181
Figure 11-7 Menu 4 Servo logic diagram 182
Figure 11-8 Menu 5 Open-loop logic diagram 184
Figure 11-9 Menu 5 Closed-loop logic diagram 186
Figure 11-10 Menu 6 logic diagram 189
Figure 11-11 Menu 7 logic diagram 191
Figure 11-12 Menu 8 logic diagram 194
Figure 11-13 Menu 9 logic diagram: Programmable logic ...197
Figure 11-14 Menu 9 logic diagram: Motorized pot and binary sum 198
Figure 11-15 Menu 12 logic diagram 202
Figure 11-16 Menu 12 logic diagram (continued) 203
Figure 11-17 Open-loop brake function 204
Figure 11-18 Open-loop brake sequence 204
Figure 11-19 Closed-loop brake function 205
Figure 11-20 Closed-loop brake sequence 205
Figure 11-21 Menu 13 Open-loop logic diagram 208
Figure 11-22 Menu 13 Closed-loop logic diagram 210
Figure 11-23 Menu 14 Logic diagram 214
Figure 11-24 Location of Solutions Module slots and their corresponding menu numbers (size 0) ...217
Figure 11-25 Location of Solutions Module slots and their corresponding menu numbers (size 1 to 6) 217
Figure 11-26 SM-Universal Encoder Plus logic diagram 220
Figure 11-27 SM-Resolver logic diagram 224
Figure 11-28 SM-Encoder Plus logic diagram 226
Figure 11-29 SM-Encoder Output Plus logic diagram 228
Figure 11-30 SM-I/O Plus analog logic diagram 231
Figure 11-31 SM-I/O Plus digital logic diagram 1 232
Figure 11-32 SM-I/O Plus digital logic diagram 2 233
Figure 11-33 SM-I/O Lite & SM-I/O Timer digital I/O logic diagram 235
Figure 11-34 SM-I/O Lite & SM-I/O Timer analog I/O logic diagram 236
Figure 11-35 SM-I/O Timer real time clock logic diagram 236
Figure 11-36 SM-I/O PELV digital I/O logic diagram 238
Figure 11-37 SM-I/O PELV digital input logic diagram 239
Figure 11-38 SM-I/O PELV relay logic diagram 239
Figure 11-39 SM-I/O PELV analog input logic diagram 239
Figure 11-40 SM-I/O PELV analog output logic diagram 240
Figure 11-41 SM-I/O 24V Protected digital I/O logic diagram 242
Figure 11-42 SM-I/O 24V Protected digital I/O logic diagram 243
Figure 11-43 SM-I/O 24V Protected relay logic diagram 243
Figure 11-44 SM-I/O 24V Protected analog output logic diagram 244
Figure 11-45 SM-I/O 120V digital input logic diagram 245
Figure 11-46 SM-I/O 120V relay diagram 246
Figure 11-47 SM-I/O 32 logic diagram 247
Figure 11-48 SM-SLM logic diagram 250
Figure 11-49 Digital input connections when Pr **6.04** is set to 0 to 3 262
Figure 13-1 Keypad status modes 283
Figure 13-2 Location of the status LED 283

List of tables

Table 2-1 200V drive ratings (200V to 240V ±10%) 14
Table 2-2 400V drive ratings (380V to 480V ±10%) 15
Table 2-3 575V drive ratings (500V to 575V ±10%) 16
Table 2-4 690V drive ratings (500V to 690V ±10%) 17
Table 2-5 Typical overload limits for size 0 to 5 17
Table 2-6 Typical overload limits for size 6 17
Table 2-7 Encoders compatible with Unidrive SP 18
Table 2-8 Solutions Module identification 23
Table 2-9 Keypad identification 26
Table 2-10 Parts supplied with the drive 26
Table 3-1 Mounting brackets 47
Table 3-2 Description of fixings 52
Table 3-3 Quantity of nylon washers supplied with the drive 52
Table 3-4 Environment considerations 53
Table 3-5 Power losses from the front of the drive when through-panel mounted 53
Table 3-6 Drive EMC filter details (size 0 to 6) 54
Table 3-7 Drive control and relay terminal data 65
Table 3-8 Drive power terminal data 65
Table 3-9 Plug-in terminal block maximum cable sizes 65
Table 3-10 Schaffner external EMC filter terminal data (size 0) 65
Table 3-11 Schaffner external EMC filter terminal data (size 1 to 6) 65
Table 3-12 Epcos external EMC Filter terminal data 65
Table 4-1 Behavior of the drive in the event of a motor circuit ground (earth) fault with an IT supply 71
Table 4-2 Supply fault current used to calculate maximum input currents 73
Table 4-3 Size 0 to 3 input current, fuse and cable size ratings (European) 74
Table 4-4 Size 0 to 3 input current, fuse and cable size ratings (USA) 74
Table 4-5 Size 4 and larger input current, fuse and cable size ratings 75
Table 4-6 Maximum motor cable lengths (200V drives) ...76
Table 4-7 Maximum motor cable lengths (400V drives) ...76
Table 4-8 Maximum motor cable lengths (575V drives) ...76
Table 4-9 Maximum motor cable lengths (690V drives) ...77
Table 4-10 Braking transistor turn on voltage 78
Table 4-11 Heatsink mounted braking resistor data 79
Table 4-12 Minimum resistance values and peak power rating for the braking resistor at 40°C (104°F) ..79
Table 4-13 Unidrive SP and EMC filter cross reference 81
Table 4-14 Second environment emission compliance (size 0) 86
Table 4-15 Second environment emission compliance (size 1 to 6) 86
Table 4-16 Connection details for RJ45 connector 90
Table 4-17 Isolated serial comms lead details 90
Table 4-18 The control connections consist of: 91
Table 4-19 Encoder types 95
Table 4-20 Drive encoder connector details 96
Table 4-21 Feedback resolution based on frequency and voltage level 97
Table 5-1 Advanced menu descriptions 103
Table 5-2 Menu 40 parameter descriptions 103
Table 5-3 Menu 41 parameter descriptions 103
Table 5-4 Alarm indications 104
Table 5-5 Solutions Module and SMARTCARD status indications on power-up 104
Table 7-1 Minimum control connection requirements for each control mode 122
Table 7-2 Minimum control connection requirements for each mode of operation 122
Table 7-3 Parameters required for feedback device set-up 133
Table 7-4 Restrictions of drive encoder lines per revolution with software version V01.06.01 and later 135
Table 7-5 Restrictions of drive encoder lines per revolution with software version V01.06.00 and earlier 136
Table 8-1 Available switching frequencies 148
Table 8-2 Sample rates for various control tasks at each switching frequency 148
Table 9-1 SMARTCARD data blocks 151
Table 9-2 SMARTCARD codes 151
Table 9-3 Key to parameter table coding 153
Table 9-4 Trip conditions 155
Table 9-5 SMARTCARD status indications 156
Table 11-1 Menu descriptions 160
Table 11-2 Key to parameter table coding 160
Table 11-3 Feature look-up table 161
Table 11-4 Definition of parameter ranges & variable maximums 164
Table 11-5 Maximum motor rated current 166
Table 11-6 Defaults for Pr 10.30 and Pr 10.31 200
Table 11-7 Active reference 256
Table 11-8 DC bus voltage thresholds 260
Table 12-1 Maximum permissible continuous output current @ 40°C (104°F) ambient 265
Table 12-2 Maximum permissible continuous output current @ 40°C (104°F) ambient with IP54 insert and standard IP54 fan installed ... 266
Table 12-3 Maximum permissible continuous output current @ 50°C (122°F) ambient 267
Table 12-4 Losses @ 40°C (104°F) ambient 268
Table 12-5 Losses @ 40°C (104°F) ambient with IP54 insert and standard IP54 fan installed ... 269
Table 12-6 Losses @ 50°C (122°F) ambient 270
Table 12-7 Power losses from the front of the drive when through-panel mounted 271
Table 12-8 IP Rating degrees of protection 272
Table 12-9 UL enclosure ratings 272
Table 12-10 Acoustic noise data 273
Table 12-11 Overall drive dimensions 273
Table 12-12 Overall drive weights 273
Table 12-13 Supply fault current used to calculate maximum input currents 273
Table 12-14 Size 0 to 3 input current, fuse and cable size ratings 274
Table 12-15 Size 4 and larger input current, fuse and cable size ratings 275
Table 12-16 Maximum motor cable lengths (200V drives) . 276
Table 12-17 Maximum motor cable lengths (400V drives) . 276
Table 12-18 Maximum motor cable lengths (575V drives) . 276
Table 12-19 Maximum motor cable lengths (690V drives) . 276
Table 12-20 Minimum resistance values and peak power rating for the braking resistor at 40°C (104°F) 277
Table 12-21 Drive control and relay terminal data 277
Table 12-22 Drive power terminal data 277

Table 12-23 Plug-in terminal block maximum cable sizes ..277
Table 12-24 Immunity compliance 277
Table 12-25 Size 0 (200V) emission compliance (single and three phase drives) 278
Table 12-26 Size 0 (400V) emission compliance 278
Table 12-27 Size 1 emission compliance 278
Table 12-28 Size 2 emission compliance 278
Table 12-29 Size 3 emission compliance 278
Table 12-30 Size 4 (200V & 400V) emission compliance ..278
Table 12-31 Size 4 (690V) emission compliance 278
Table 12-32 Size 5 (400V) emission compliance 278
Table 12-33 Size 5 (690V) emission compliance 278
Table 12-34 Size 6 (400V only) emission compliance 279
Table 12-35 Size 6 (690V only) emission compliance 279
Table 12-36 EMC filter cross reference 279
Table 12-37 Optional external EMC filter details 280
Table 12-38 Optional external EMC filter dimensions 281
Table 13-1 Trip indications 284
Table 13-2 Serial communications look-up table 297
Table 13-3 Trip categories 298
Table 13-4 Alarm indications 299
Table 13-5 Status indications 299
Table 13-6 Solutions Module and SMARTCARD status indications at power-up 299
Table 14-1 Maximum continuous output current (200V drives) 301
Table 14-2 Maximum continuous output current (400V drives) 301
Table 14-3 Maximum continuous output current (575V drives) 301
Table 14-4 Maximum continuous output current (690V drives) 301

Index

Symbols

+10V user output 92
+24V external input 92
+24V user output 93

Numerics

0V common 92

A

AC supply contactor 75
AC supply requirements 71
Acceleration 107, 112, 126, 127, 129, 131, 140, 143, 174
Access 28
Access Level 105
Accuracy 272
Acoustic noise 273
Advanced menus 103
Advanced parameters 160
Air-flow in a ventilated enclosure 49
Alarm 299
Alarm Indications 299
Altitude 271
Analog input 2 93
Analog input 3 93
Analog output 1 93
Analog output 2 93
Autotune 137, 140, 143, 145

B

Basic requirements 122
Braking 78
Braking Modes 257
Braking resistor values 277

C

Cable clearances 85
Cable lengths (maximum) 276
Cable size ratings 273
Cable types and lengths 76
Catch a spinning motor 262
Cautions 11
Closed loop vector mode 18
Control connections 91
Control terminal specification 92
Cooling 28
Cooling method 271
CTSoft 132
Current limit 112
Current limits 147
Current loop gains 140, 143, 145
Current ratings 265

D

DC bus paralleling 72
DC bus voltage 78, 164, 257, 260, 261
Deceleration 78, 107, 112, 115, 126, 127, 129, 131, 140, 143, ...174, 254, 257, 260
Defaults (restoring parameter) 104
Derating 265
Destination parameter 91
Diagnostics 283
Digital I/O 1 94
Digital I/O 2 94
Digital I/O 3 94
Digital Input 1 94
Digital Input 2 94
Digital Input 3 94
Dimensions (overall) 273
Display 100
Display messages 104
Drive enable 94
Drive features 18

E

Electrical safety 28
Electrical terminals 64
Electromagnetic compatibility (EMC) 29, 81, 277
EMC - Compliance with generic emission standards 87
EMC - General requirements 84
EMC - Variations in the wiring 88
EMC filter dimensions (external, overall) 281
EMC filter torque settings (external) 282
EMC filters (optional external) 279
Emission 277
EN61800-3:2004 (standard for power drive systems) 86
Enclosure 48
Enclosure Layout 48
Enclosure sizing 48
Encoder connections 85, 94
Encoder feedback limits 148
Encoder types 95
Environmental protection 28
External EMC filter 54

F

Fast Disable 264
Feedback device cable shielding 85
Field weakening (constant power) operation 148
Fieldbus module category parameters 249
Fire protection 28
Fixed V/F mode 18
Fuse ratings 273
Fuse types 75

G

Getting Started 100
Ground connections 75, 84
Ground leakage 81
Ground terminals 64
Grounding bracket 82
Grounding clamp 82

H

Hazardous areas 29
Heatsink mounted braking resistor 60, 78
High speed operation 148
Humidity 271

I

I/O module category parameters 231
Input current ratings 273
Input inductor calculation 72
Internal EMC filter 83
IP Rating (Ingress protection) 271
Isolator switch 89
Items supplied with the drive 26

K

Keypad and display - Installing / removing 35, 36
Keypad operation 100

L

Line power supply loss modes 260
Line reactors 71, 271

M

Maximum speed / frequency 149
Mechanical Installation 28
Menu 0 102
Menu 01 - Frequency / speed reference 168
Menu 02 - Ramps 172
Menu 03 - Slave frequency, speed feedback and speed control 175
Menu 04 - Torque and current control 178
Menu 05 - Motor control 184
Menu 06 - Sequencer and clock 189
Menu 07 - Analog I/O 191
Menu 08 - Digital I/O 194
Menu 09 - Programmable logic, motorized pot and binary sum 197
Menu 10 - Status and trips 200
Menu 11 - General drive set-up 201
Menu 12 - Threshold detectors and variable selectors 202
Menu 13 - Position control 208
Menu 14 - User PID controller 214
Menu 18 - Application menu 1 253
Menu 19 - Application menu 2 253
Menu 20 - Application menu 3 253
Menu 21 - Second motor parameters 254
Menu 22 - Additional Menu 0 set-up 255
Menu structure 102
Minimum connections to get the motor running in any operating mode 123
Mode parameter 91
Model number 18
Monitoring 114
Motor (running the motor) 122
Motor cable - interruptions 89
Motor isolator / disconnector-switch 89
Motor map parameters 137
Motor number of poles 137, 139, 142, 145
Motor operation 78
Motor parameters 119
Motor rated current 137, 139, 142, 145
Motor rated current (maximum) 147
Motor rated frequency 137, 139, 142
Motor rated power factor 137, 139, 142
Motor rated speed 137, 139, 142
Motor rated speed autotune 143
Motor rated voltage 137, 139, 142
Motor requirements 271
Motor thermal protection 147
Motor winding voltage 77
Multiple motors 77

N

Nameplate description 20
NEMA rating 50, 271, 272
Notes 11

O

Onboard PLC 157
Open loop mode 18
Open loop vector mode 18
Operating mode (changing) 104, 122
Operating modes 18
Operating-mode selection 121
Optimization 137
Options 23
Output contactor 78
Output frequency 272

P

Parameter access level 105
Parameter ranges 164
Parameter security 105
Parameter x.00 112
Planning the installation 28
Position feedback 122
Position feedback module category parameters 220
Power dissipation 268
Power ratings 79, 265
Power terminals 64
Precision reference Analog input 1 92
Product information 13

Q

Quadratic V/F mode 18
Quick start commissioning 126, 132
Quick start connections 122

R

Ramps 112
Ratings 13, 73
Reactor current ratings 72, 271
Reference modes 256
Relay contacts 94
Residual current device (RCD) 81
Resistances (minimum) 79
Resolution 272
RJ45 connector - connection details 90
Routine maintenance 66

S

SAFE TORQUE OFF 99
SAFE TORQUE OFF/drive enable 94
Safety Information 11, 28
Saving parameters 104
Sealed enclosure - sizing 48
Serial comms lead 90
Serial communications connections 90
Serial communications look-up table 297
Serial communications port isolation 90
Servo 18
Single line descriptions 107
Slip compensation 138
SMARTCARD operation 150, 157
SMARTCARD trips 155
Solutions Module 217
Solutions Module - Installing / removing 35
Speed feedback 122
Speed limits 112
Speed loop gains 141, 144, 146
Speed range 272
Speed reference selection 112
Speed-loop PID gains 113
Start up time 272
Starts per hour 272
Status 299
Status Indications 299
Status information 121
Stop modes 259
Storage 271
Supply requirements 271
Supply types 71
Surface mounting the drive 39
Surge immunity of control circuits - long cables and connections outside a building 89
Surge suppression for analog and bipolar inputs and outputs 90
Surge suppression for digital and unipolar inputs and outputs 90
Switching frequency 148, 149
SYPTLite 157

T

Technical data 265
Temperature 271
Terminal block in the enclosure 89
Terminal cover removal 29
Terminal sizes 65
Thermal protection circuit for the braking resistor 80
Through-panel mounting the drive 43
Torque modes 258
Torque settings 65, 277
Trip 283
Trip categories 298
Trip History 300
Trip Indications 283

U

UL Listing Information 301
User Security 105

V

Variable maximums 164
Ventilation 50
Vibration 272
Voltage boost 113
Voltage mode 138

W

Warnings 11
Weights 273



0471-0000-13